SN74AHC1G00 Single 2-Input Positive-NAND Gate

1 Features

- Operating range: 2 V to 5.5 V
- Maximum t_{pd} of 6.5 ns at 5 V
- Low power consumption: maximum I_{CC} of 10 µA
- ±8-mA output drive at 5 V
- Schmitt trigger action at all inputs makes the circuit tolerant for slower input rise and fall time
- Latch-up performance exceeds 250 mA per JESD 17

2 Applications

- Enable or disable a digital signal
- Controlling an indicator LED
- Translation between communication modules and system controllers

3 Description

The SN74AHC1G00 performs the Boolean function $Y = \overline{A \bullet B}$ or $Y = \overline{A} + \overline{B}$ in positive logic.

Package Information

PART NUMBER	PACKAGE(1)	PACKAGE SIZE(2)	BODY SIZE(2)
SN74AHC1G00	DBV (SOT-23, 5)	2.9 mm x 2.8 mm	2.9 mm x 1.6 mm
	DCK (SC-70, 5)	2 mm x 2.1 mm	2 mm × 1.25 mm
	DRL (SOT, 5)	1.6 mm × 1.6 mm	1.6 mm × 1.2 mm

(1) For all available packages, see the orderable addendum at the end of the data sheet.
(2) The package size (length × width) is a nominal value and includes pins, where applicable.

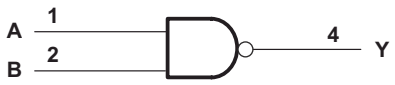

Logic Diagram (Positive Logic)

An IMPORTANT NOTICE at the end of this data sheet addresses availability, warranty, changes, use in safety-critical applications, intellectual property matters and other important disclaimers. PRODUCTION DATA.

Table of Contents

1 Features....1
2 Applications....1
3 Description....1
4 Pin Configuration and Functions....3
5 Specifications....4
5.1 Absolute Maximum Ratings....4
5.2 ESD Ratings....4
5.3 Recommended Operating Conditions....4
5.4 Thermal Information....5
5.5 Electrical Characteristics....5
5.6 Switching Characteristics: V_{CC} = 3.3 V ± 0.3 V....6
5.7 Switching Characteristics: V_{CC} = 5 V ± 0.5 V....7
5.8 Operating Characteristics....7
5.9 Typical Characteristics....7
6 Parameter Measurement information....8
7 Detailed Description....9
7.1 Overview....9
7.2 Functional Block Diagram....9
7.3 Feature Description....9
7.4 Device Functional Modes....9
8 Application and Implementation....10
8.1 Typical Application....10
8.2 Power Supply Recommendations....11
8.3 Layout....12
9 Device and Documentation Support....13
9.1 Documentation Support....13
9.2 Receiving Notification of Documentation Updates....13
9.3 Support Resources....13
9.4 Trademarks....13
9.5 Electrostatic Discharge Caution....13
9.6 Glossary....13
10 Revision History....13
11 Mechanical, Packaging, and Orderable Information....14

Copyright © 2024 Texas Instruments Incorporated

4 Pin Configuration and Functions

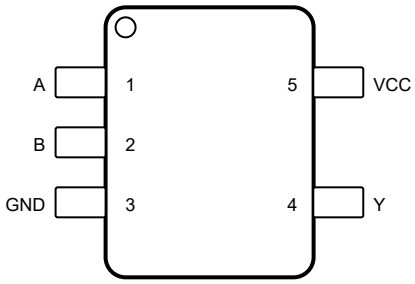

Figure 4-1. DBV Package 5-Pin SOT-23 Top View

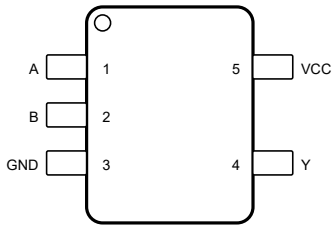

Figure 4-2. DCK Package 5-Pin SC70 Top View

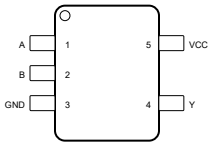

Figure 4-3. DRL Package 5-Pin SOT Top View

Table 4-1. Pin Functions

PIN		TYPE[1]	DESCRIPTION
NO.	NAME		
1	A	I	A input
2	B	I	B input
3	GND	—	Ground
4	Y	O	Output
5	V_{CC}	—	Power

(1) Signal Types: I = Input, O = Output, I/O = Input or Output

Copyright © 2024 Texas Instruments Incorporated

5 Specifications

5.1 Absolute Maximum Ratings

over operating free-air temperature range (unless otherwise noted) (1)

			MIN	MAX	UNIT
V_{CC}	Supply voltage		–0.5	7	V
V_I (2)	Input voltage		–0.5	7	V
V_O (2)	Output voltage		–0.5	V_{CC} + 0.5	V
I_{IK}	Input clamp current	(V_I < 0)		–20	mA
I_{OK}	Output clamp current	(V_O < 0 or V_O > V_{CC})		±20	mA
I_O	Continuous output current	(V_O = 0 to V_{CC})		±25	mA
	Continuous current through V_{CC} or GND			±50	mA
T_J	Maximum junction temperature			150	°C
T_{stg}	Storage temperature		–65	150	°C

(1) Stresses beyond those listed under *Absolute Maximum Ratings* may cause permanent damage to the device. These are stress ratings only, which do not imply functional operation of the device at these or any other conditions beyond those indicated under *Recommended Operating Conditions*. Exposure to absolute-maximum-rated conditions for extended periods may affect device reliability.
(2) The input and output voltage ratings may be exceeded if the input and output current ratings are observed.

5.2 ESD Ratings

			VALUE	UNIT
$V_{(ESD)}$	Electrostatic discharge	Human-body model (HBM), per ANSI/ESDA/JEDEC JS-001(1)	±2000	V
		Charged-device model (CDM), per JEDEC specification JESD22-C101(2)	±1000	

(1) JEDEC document JEP155 states that 500-V HBM allows safe manufacturing with a standard ESD control process.
(2) JEDEC document JEP157 states that 250-V CDM allows safe manufacturing with a standard ESD control process.

5.3 Recommended Operating Conditions

over operating free-air temperature range (unless otherwise noted)(1)

			MIN	MAX	UNIT
V_{CC}	Supply voltage		2	5.5	V
V_{IH}	High-level input voltage	V_{CC} = 2 V	1.5		V
		V_{CC} = 3 V	2.1		
		V_{CC} = 5.5 V	3.85		
V_{IL}	Low-level input voltage	V_{CC} = 2 V		0.5	V
		V_{CC} = 3 V		0.9	
		V_{CC} = 5.5 V		1.65	
V_I	Input voltage		0	5.5	V
V_O	Output voltage		0	V_{CC}	V
I_{OH}	High-level output current	V_{CC} = 2 V		–50	µA
		V_{CC} = 3.3 V ± 0.3 V		–4	mA
		V_{CC} = 5 V ± 0.5 V		–8	
I_{OL}	Low-level output current	V_{CC} = 2 V		50	µA
		V_{CC} = 3.3 V ± 0.3 V		4	mA
		V_{CC} = 5 V ± 0.5 V		8	
Δt/Δv	Input transition rise or fall rate	V_{CC} = 3.3 V ± 0.3 V		100	ns/V
		V_{CC} = 5 V ± 0.5 V		20	

Copyright © 2024 Texas Instruments Incorporated

5.3 Recommended Operating Conditions (continued)

over operating free-air temperature range (unless otherwise noted)(1)

		MIN	MAX	UNIT
T_A	Operating free-air temperature	–40	125	°C

(1) All unused inputs of the device must be held at V_{CC} or GND to ensure proper device operation. See the TI application report, *Implications of Slow or Floating CMOS Inputs*, SCBA004.

5.4 Thermal Information

THERMAL METRIC(1)		SN74AHC1G00			UNIT
		DBV (SOT-23)	DCK (SC70)	DRL (SOT)	
		5 PINS	5 PINS	5 PINS	
$R_{\theta JA}$	Junction-to-ambient thermal resistance	278	289.2	256	°C/W
$R_{\theta JC(top)}$	Junction-to-case (top) thermal resistance	180.5	205.8	130	°C/W
$R_{\theta JB}$	Junction-to-board thermal resistance	184.4	176.2	152	°C/W
ψ_{JT}	Junction-to-top characterization parameter	115.4	117.6	9.9	°C/W
ψ_{JB}	Junction-to-board characterization parameter	183.4	175.1	152	°C/W
$R_{\theta JC(bot)}$	Junction-to-case (bot) thermal resistance	N/A	N/A	N/A	°C/W

(1) For more information about traditional and new thermal metrics, see the *Semiconductor and IC Package Thermal Metrics* application report, SPRA953.

5.5 Electrical Characteristics

over operating free-air temperature range (unless otherwise noted)

PARAMETER(1)		TEST CONDITIONS		V_{CC}	MIN	TYP	MAX	UNIT
V_{OH}	High level output voltage	I_{OH} = –50 µA	T_A = 25°C	2 V	1.9	2		V
			T_A = –40°C to +85°C		1.9			
			T_A = –40°C to +125°C		1.9			
			T_A = 25°C	3 V	2.9	3		
			T_A = –40°C to +85°C		2.9			
			T_A = –40°C to +125°C		2.9			
			T_A = 25°C	4.5 V	4.4	4.5		
			T_A = –40°C to +85°C		4.4			
			T_A = –40°C to +125°C		4.4			
		I_{OH} = –4 mA	T_A = 25°C	3 V	2.58			
			T_A = –40°C to +85°C		2.48			
			T_A = –40°C to +125°C		2.48			
		I_{OH} = –8 mA	T_A = 25°C	4.5 V	3.94			
			T_A = –40°C to +85°C		3.8			
			T_A = –40°C to +125°C		3.8			

Copyright © 2024 Texas Instruments Incorporated

5.5 Electrical Characteristics (continued)

over operating free-air temperature range (unless otherwise noted)

PARAMETER[1]		TEST CONDITIONS		V_{CC}	MIN	TYP	MAX	UNIT
V_{OL}	Low level output voltage	I_{OL} = 50 µA	T_A = 25°C	2 V			0.1	V
			T_A = –40°C to +85°C				0.1	
			T_A = –40°C to +125°C				0.1	
			T_A = 25°C	3 V			0.1	
			T_A = –40°C to +85°C				0.1	
			T_A = –40°C to +125°C				0.1	
			T_A = 25°C	4.5 V			0.1	
			T_A = –40°C to +85°C				0.1	
			T_A = –40°C to +125°C				0.1	
		I_{OL} = 4 mA	T_A = 25°C	3 V			0.36	
			T_A = –40°C to +85°C				0.44	
			T_A = –40°C to +125°C				0.44	
		I_{OL} = 8 mA	T_A = 25°C	4.5 V			0.36	
			T_A = –40°C to +85°C				0.44	
			T_A = –40°C to +125°C				0.44	
I_I	Input leakage current	V_I = 5.5 V or GND	T_A = 25°C	0 V to 5.5 V			±0.1	µA
			T_A = –40°C to +85°C				±1	
			T_A = –40°C to +125°C				±1	
I_{CC}	Supply current	V_I = V_{CC} or GND, I_O = 0	T_A = 25°C	5.5 V			1	µA
			T_A = –40°C to +85°C				10	
			T_A = –40°C to +125°C				10	
C_i	Input Capacitance	V_I = V_{CC} or GND	T_A = 25°C	5 V		2	10	pF
			T_A = –40°C to +85°C				10	
			T_A = –40°C to +125°C				10	

(1) Recommended T_A = –40°C to +125°C

5.6 Switching Characteristics: V_{CC} = 3.3 V ± 0.3 V

over recommended operating free-air temperature range, V_{CC} = 3.3 V ± 0.3 V (unless otherwise noted) (see Load Circuit and Voltage Waveforms)

PARAMETER	FROM (INPUT)	TO (OUTPUT)	OUTPUT CAPACITANCE	T_A [1]	MIN	TYP	MAX	UNIT
t_{PLH}	A or B	Y	C_L = 15 pF	25°C		5.5	7.9	ns
				–40°C to +85°C	1		9.5	
				–40°C to +125°C	1		10.5	
t_{PHL}				25°C		5.5	7.9	
				–40°C to +85°C	1		9.5	
				–40°C to +125°C	1		10.5	
t_{PLH}	A or B	Y	C_L = 50 pF	25°C		8	11.4	ns
				–40°C to +85°C	1		13	
				–40°C to +125°C	1		14	
t_{PHL}				25°C		8	11.4	
				–40°C to +85°C	1		13	
				–40°C to +125°C	1		14	

(1) Recommended T_A = –40°C to +125°C

Copyright © 2024 Texas Instruments Incorporated

5.7 Switching Characteristics: V_{CC} = 5 V ± 0.5 V

over recommended operating free-air temperature range, V_{CC} = 5 V ± 0.5 V (unless otherwise noted) (see Load Circuit and Voltage Waveforms)

PARAMETER	FROM (INPUT)	TO (OUTPUT)	OUTPUT CAPACITANCE	T_A (1)	MIN	TYP	MAX	UNIT
t_{PLH}	A or B	Y	C_L = 15 pF	25°C		3.7	5.5	ns
				–40°C to +85°C	1		6.5	
				–40°C to +125°C	1		7	
t_{PHL}				25°C		3.7	5.5	
				–40°C to +85°C	1		6.5	
				–40°C to +125°C	1		7	
t_{PLH}	A or B	Y	C_L = 50 pF	25°C		5.2	7.5	ns
				–40°C to +85°C	1		6.5	
				–40°C to +125°C	1		9	
t_{PHL}				25°C		5.2	7.5	
				–40°C to +85°C	1		6.5	
				–40°C to +125°C	1		9	

(1) Recommended T_A = –40°C to +125°C

5.8 Operating Characteristics

V_{CC} = 5 V, T_A = 25°C

PARAMETER		TEST CONDITIONS	MIN	TYP	MAX	UNIT
C_{pd}	Power dissipation capacitance	No load, f = 1 MHz		9.5		pF

5.9 Typical Characteristics

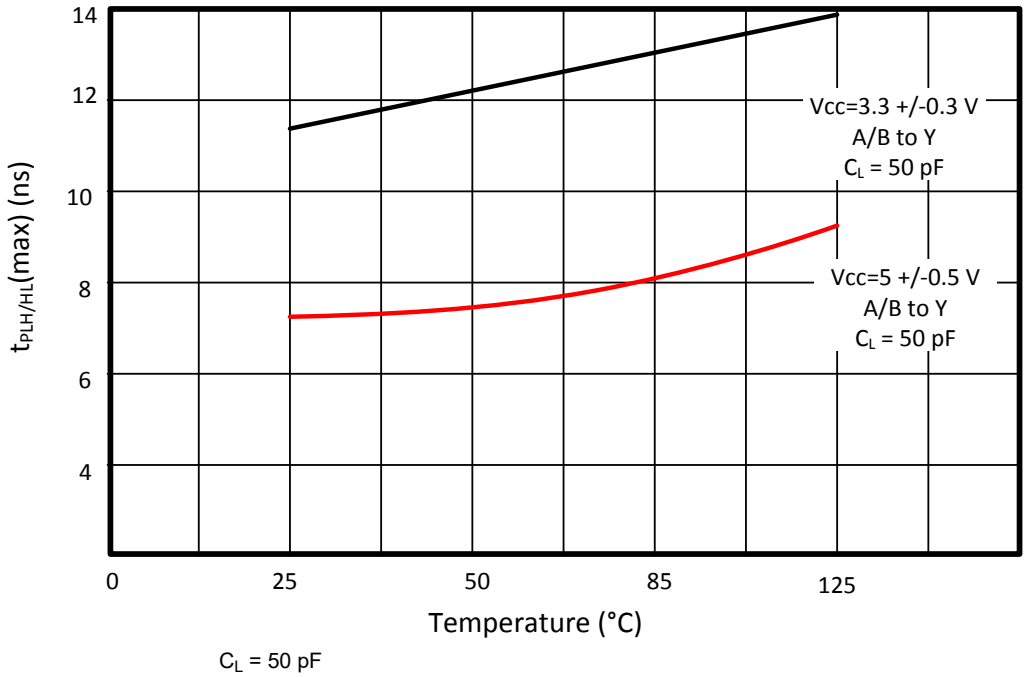

C_L = 50 pF

Figure 5-1. Propagation Delay vs Temperature

Copyright © 2024 Texas Instruments Incorporated

6 Parameter Measurement information

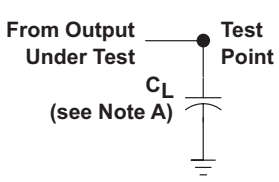

LOAD CIRCUIT FOR
TOTEM-POLE OUTPUTS

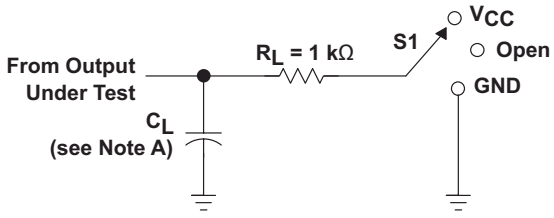

LOAD CIRCUIT FOR
3-STATE AND OPEN-DRAIN OUTPUTS

TEST	S1
t_{PLH}/t_{PHL}	Open
t_{PLZ}/t_{PZL}	V_{CC}
t_{PHZ}/t_{PZH}	GND
Open Drain	V_{CC}

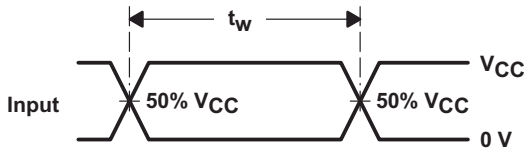

VOLTAGE WAVEFORMS
PULSE DURATION

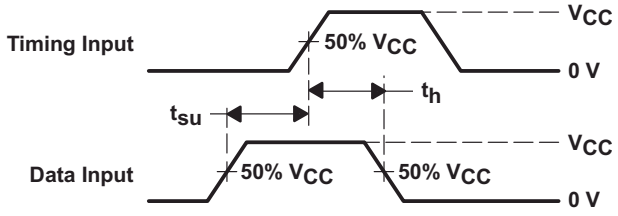

VOLTAGE WAVEFORMS
SETUP AND HOLD TIMES

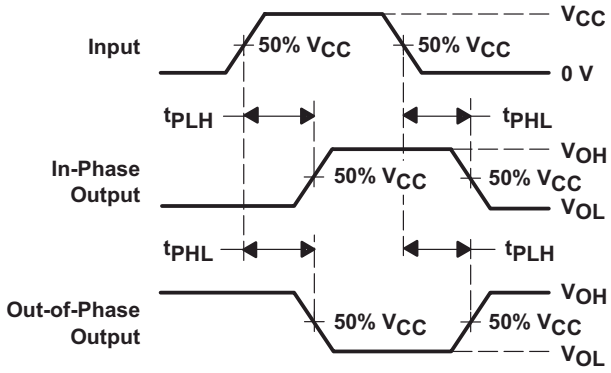

VOLTAGE WAVEFORMS
PROPAGATION DELAY TIMES
INVERTING AND NONINVERTING OUTPUTS

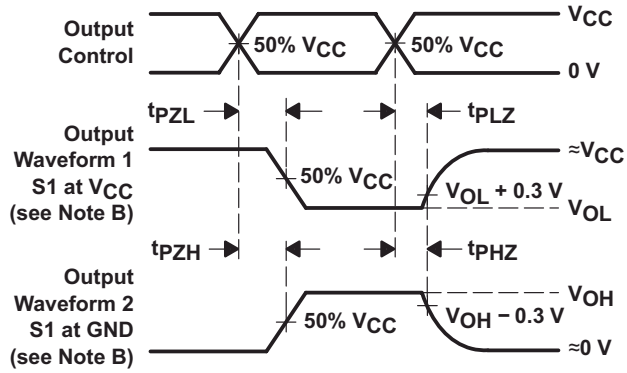

VOLTAGE WAVEFORMS
ENABLE AND DISABLE TIMES
LOW- AND HIGH-LEVEL ENABLING

A. C_L includes probe and jig capacitance.
B. Waveform 1 is for an output with internal conditions such that the output is low except when disabled by the output control.
Waveform 2 is for an output with internal conditions such that the output is high except when disabled by the output control.
C. All input pulses are supplied by generators having the following characteristics: PRR ≤ 1 MHz, Z_O = 50 Ω, t_r ≤ 3 ns, t_f ≤ 3 ns.
D. The outputs are measured one at a time with one input transition per measurement.
E. All parameters and waveforms are not applicable to all devices.

Figure 6-1. Load Circuit and Voltage Waveforms

Copyright © 2024 Texas Instruments Incorporated

7 Detailed Description

7.1 Overview

The SN74AHC1G00 device performs the NAND Boolean function $Y = \overline{A \times B}$ or $Y = \overline{A} + \overline{B}$ in positive logic. The device has a wide operating range of V_{CC} from 2 V to 5 V.

7.2 Functional Block Diagram



Figure 7-1. Logic Diagram (Positive Logic)

7.3 Feature Description

The SN74AHC1G00 device has wide operating voltage range for logic system from 2 V to 5 V. The low propagation delay allows fast switching and higher speeds of operation. In addition, the low power consumption of 10-uA (maximum) makes this device a good choice for portable and battery power-sensitive applications. The Schmitt trigger action on all inputs have noise rejection capabilities.

7.4 Device Functional Modes

Table 7-1. Function Table

INPUTS(1)		OUTPUT(2)
A	B	Y
H	H	L
L	X	H
X	L	H

(1) H = High Voltage Level, L = Low Voltage Level, X = Don't Care
(2) H = Driving High, L = Driving Low, Z = High Impedance State

Copyright © 2024 Texas Instruments Incorporated

8 Application and Implementation

Note

Information in the following applications sections is not part of the TI component specification, and TI does not warrant its accuracy or completeness. TI's customers are responsible for determining suitability of components for their purposes, as well as validating and testing their design implementation to confirm system functionality.

8.1 Typical Application

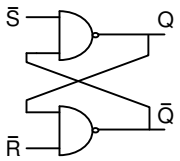

Figure 8-1. Typical Application

8.1.1 Design Requirements

This SN74AHC1G00 device uses CMOS technology and has balanced output drive. Take care to avoid bus contention because it can drive currents that would exceed maximum limits. The high drive also creates fast edges into light loads. Routing and load conditions must be considered to prevent ringing.

8.1.2 Detailed Design Procedure

- Recommended input conditions:
  - Specified high and low levels. See V_{IH} and V_{IL} in *Section 5.3*.
  - Inputs are overvoltage tolerant allowing them to go as high as 5.5 V at any valid V_{CC}.
- Recommended output conditions:
  - Load currents must not exceed 25 mA per output and 50 mA total for the part.
  - Outputs should not be pulled above V_{CC}.

Copyright © 2024 Texas Instruments Incorporated

8.1.3 Application Curve

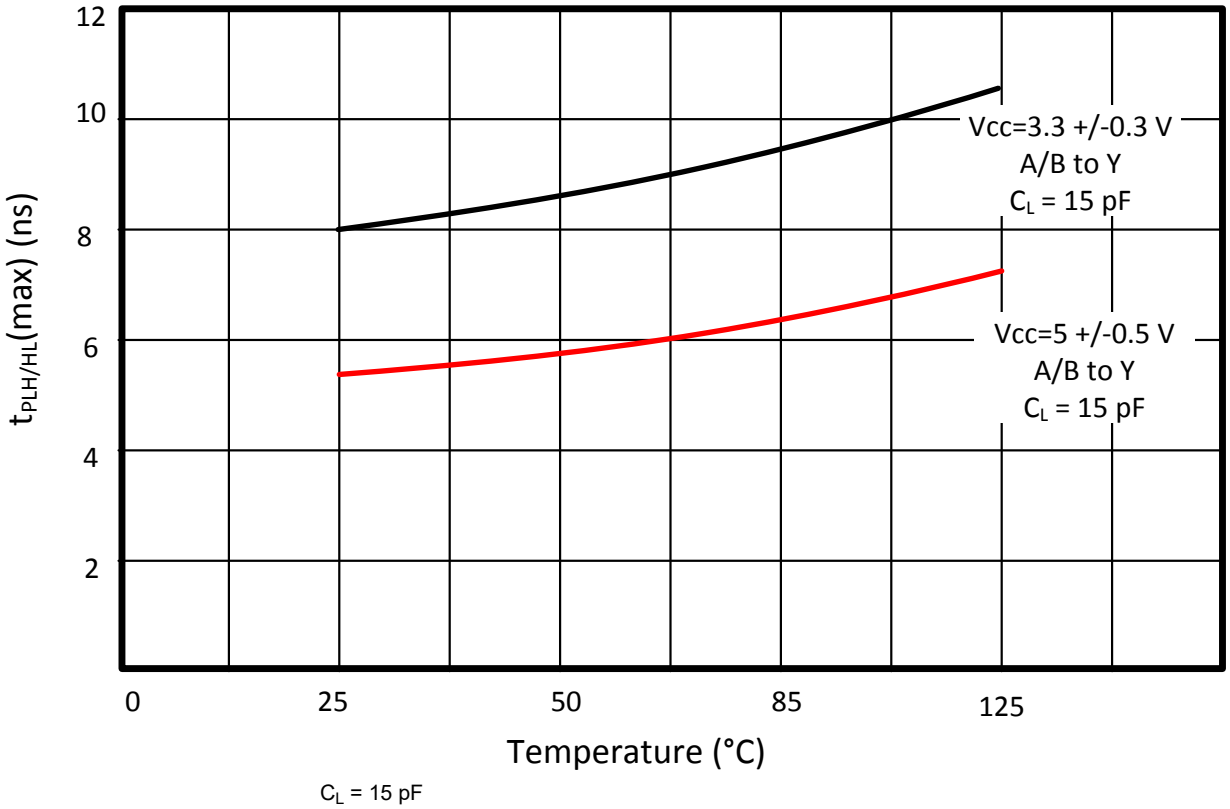

C_L = 15 pF

Figure 8-2. Propagation Delay vs Temperature

8.2 Power Supply Recommendations

The power supply can be any voltage between the minimum and maximum supply voltage rating located in the *Section 5.3*.

Each V_{CC} terminal should have a good bypass capacitor to prevent power disturbance. For devices with a single supply, TI recommends a 0.1-µF capacitor; if there are multiple V_{CC} terminals, then TI recommends a 0.01-µF or 0.022-µF capacitor for each power terminal. Multiple bypass capacitors can be paralleled to reject different frequencies of noise. Frequencies of 0.1 µF and 1 µF are commonly used in parallel. The bypass capacitor must be installed as close as possible to the power terminal for best results.

Copyright © 2024 Texas Instruments Incorporated

8.3 Layout

8.3.1 Layout Guidelines

When using multiple bit logic devices inputs must not ever float.

In many cases, functions or parts of functions of digital logic devices are unused. For example, when only two inputs of a triple-input AND gate are used or only three of the four buffer gates are used. Such input pins must not be left unconnected because the undefined voltages at the outside connections result in undefined operational states. The following are the rules must be observed under all circumstances.

All unused inputs of digital logic devices must be connected to a high or low bias to prevent them from floating. The logic level that should be applied to any particular unused input depends on the function of the device. Generally they will be tied to GND or V_{CC} whichever make more sense or is more convenient. Floating outputs is generally acceptable, unless the part is a transceiver. If the transceiver has an output enable pin, it disables the outputs section of the part when asserted. This does not disable the input section of the input and output, so they also cannot float when disabled.

8.3.2 Layout Example

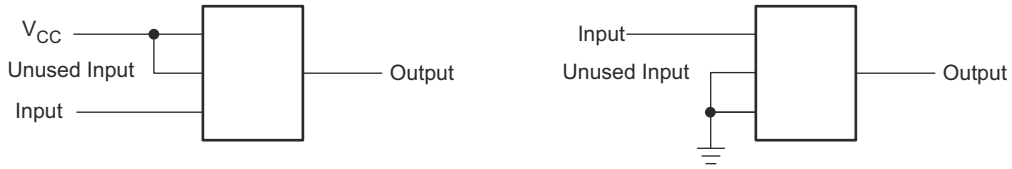

Figure 8-3. Layout Recommendation

Copyright © 2024 Texas Instruments Incorporated

9 Device and Documentation Support

9.1 Documentation Support

9.1.1 Related Documentation

For related documentation, see the following:

- Texas Instruments, *Introduction to Logic* application report
- Texas Instruments, *Implications of Slow or Floating CMOS Inputs*application note

9.2 Receiving Notification of Documentation Updates

To receive notification of documentation updates, navigate to the device product folder on ti.com. Click on *Notifications* to register and receive a weekly digest of any product information that has changed. For change details, review the revision history included in any revised document.

9.3 Support Resources

TI E2E™ support forums are an engineer's go-to source for fast, verified answers and design help — straight from the experts. Search existing answers or ask your own question to get the quick design help you need.

Linked content is provided "AS IS" by the respective contributors. They do not constitute TI specifications and do not necessarily reflect TI's views; see TI's Terms of Use.

9.4 Trademarks

TI E2E™ is a trademark of Texas Instruments.
All trademarks are the property of their respective owners.

9.5 Electrostatic Discharge Caution



This integrated circuit can be damaged by ESD. Texas Instruments recommends that all integrated circuits be handled with appropriate precautions. Failure to observe proper handling and installation procedures can cause damage.

ESD damage can range from subtle performance degradation to complete device failure. Precision integrated circuits may be more susceptible to damage because very small parametric changes could cause the device not to meet its published specifications.

9.6 Glossary

TI Glossary	This glossary lists and explains terms, acronyms, and definitions.

10 Revision History

NOTE: Page numbers for previous revisions may differ from page numbers in the current version.

Changes from Revision P (October 2023) to Revision Q (January 2024)	Page
• Updated thermal values for DBV package from RθJA = 240 to 278, RθJC(top) = 174.5 to 180.5, RθJB = 73.7 to 184.4, ΨJT = 54.9 to 115.4, ΨJB = 60.1 to 183.4, RθJC(bot) = N/A, all values in °C/W	5

Changes from Revision O (April 2016) to Revision P (October 2023)	Page
• Updated the numbering format for tables, figures, and cross-references throughout the document	1
• Updated thermal values for DCK package from RθJA = 276.53 to 289.2, RθJC(top) = 118.5 to 205.8, RθJB = 62.8 to 176.2, ΨJT = 6.7 to 117.6, ΨJB = 62.1 to 175.1, RθJC(bot) = N/A, all values in °C/W	5

Copyright © 2024 Texas Instruments Incorporated

11 Mechanical, Packaging, and Orderable Information

The following pages include mechanical, packaging, and orderable information. This information is the most current data available for the designated devices. This data is subject to change without notice and revision of this document. For browser-based versions of this data sheet, refer to the left-hand navigation.

Copyright © 2024 Texas Instruments Incorporated

PACKAGING INFORMATION

Orderable part number	Status (1)	Material type (2)	Package | Pins	Package qty | Carrier	RoHS (3)	Lead finish/ Ball material (4)	MSL rating/ Peak reflow (5)	Op temp (°C)	Part marking (6)
SN74AHC1G00DBVR	Active	Production	SOT-23 (DBV) | 5	3000 | LARGE T&R	Yes	NIPDAU | SN | NIPDAU	Level-1-260C-UNLIM	-40 to 125	(35XH, 3BSF, A003, A00G, A00J, A 00L, A00S)
SN74AHC1G00DBVR.A	Active	Production	SOT-23 (DBV) | 5	3000 | LARGE T&R	Yes	SN	Level-1-260C-UNLIM	-40 to 125	(35XH, 3BSF, A003, A00G, A00J, A 00L, A00S)
SN74AHC1G00DBVRG4	Active	Production	SOT-23 (DBV) | 5	3000 | LARGE T&R	Yes	NIPDAU	Level-1-260C-UNLIM	-40 to 125	A00G
SN74AHC1G00DBVRG4.A	Active	Production	SOT-23 (DBV) | 5	3000 | LARGE T&R	Yes	NIPDAU	Level-1-260C-UNLIM	-40 to 125	A00G
SN74AHC1G00DBVT	Obsolete	Production	SOT-23 (DBV) | 5	-	-	Call TI	Call TI	-40 to 125	(A003, A00G, A00J, A00S)
SN74AHC1G00DBVTG4.A	Active	Production	SOT-23 (DBV) | 5	250 | SMALL T&R	Yes	NIPDAU	Level-1-260C-UNLIM	-40 to 125	A00G
SN74AHC1G00DCK3	Last Time Buy	Production	SC70 (DCK) | 5	3000 | LARGE T&R	Yes	SNBI	Level-1-260C-UNLIM	-40 to 125	AAY
SN74AHC1G00DCK3.A	Last Time Buy	Production	SC70 (DCK) | 5	3000 | LARGE T&R	Yes	SNBI	Level-1-260C-UNLIM	-40 to 125	AAY
SN74AHC1G00DCKR	Active	Production	SC70 (DCK) | 5	3000 | LARGE T&R	Yes	SN	Level-1-260C-UNLIM	-40 to 125	(1QP, AA3, AAG, AA J, AAL, AAS)
SN74AHC1G00DCKR.A	Active	Production	SC70 (DCK) | 5	3000 | LARGE T&R	Yes	SN	Level-1-260C-UNLIM	-40 to 125	(1QP, AA3, AAG, AA J, AAL, AAS)
SN74AHC1G00DCKRE4	Active	Production	SC70 (DCK) | 5	3000 | LARGE T&R	Yes	NIPDAU	Level-1-260C-UNLIM	-40 to 125	AA3
SN74AHC1G00DCKRG4	Active	Production	SC70 (DCK) | 5	3000 | LARGE T&R	Yes	NIPDAU	Level-1-260C-UNLIM	-40 to 125	AA3
SN74AHC1G00DCKRG4.A	Active	Production	SC70 (DCK) | 5	3000 | LARGE T&R	Yes	NIPDAU	Level-1-260C-UNLIM	-40 to 125	AA3
SN74AHC1G00DCKT	Obsolete	Production	SC70 (DCK) | 5	-	-	Call TI	Call TI	-40 to 125	(AA3, AAG, AAJ, AA S)
SN74AHC1G00DCKTG4	Active	Production	SC70 (DCK) | 5	250 | SMALL T&R	Yes	NIPDAU	Level-1-260C-UNLIM	-40 to 125	AA3
SN74AHC1G00DCKTG4.A	Active	Production	SC70 (DCK) | 5	250 | SMALL T&R	Yes	NIPDAU	Level-1-260C-UNLIM	-40 to 125	AA3
SN74AHC1G00DRLR	Active	Production	SOT-5X3 (DRL) | 5	4000 | LARGE T&R	Yes	NIPDAU | NIPDAUAG	Level-1-260C-UNLIM	-40 to 125	(AAB, AAS)
SN74AHC1G00DRLR.A	Active	Production	SOT-5X3 (DRL) | 5	4000 | LARGE T&R	Yes	NIPDAUAG	Level-1-260C-UNLIM	-40 to 125	(AAB, AAS)

(1) **Status:** For more details on status, see our product life cycle.

(2) **Material type:** When designated, preproduction parts are prototypes/experimental devices, and are not yet approved or released for full production. Testing and final process, including without limitation quality assurance, reliability performance testing, and/or process qualification, may not yet be complete, and this item is subject to further changes or possible discontinuation. If available for ordering, purchases will be subject to an additional waiver at checkout, and are intended for early internal evaluation purposes only. These items are sold without warranties of any kind.

(3) **RoHS values:** Yes, No, RoHS Exempt. See the TI RoHS Statement for additional information and value definition.

(4) **Lead finish/Ball material:** Parts may have multiple material finish options. Finish options are separated by a vertical ruled line. Lead finish/Ball material values may wrap to two lines if the finish value exceeds the maximum column width.

(5) **MSL rating/Peak reflow:** The moisture sensitivity level ratings and peak solder (reflow) temperatures. In the event that a part has multiple moisture sensitivity ratings, only the lowest level per JEDEC standards is shown. Refer to the shipping label for the actual reflow temperature that will be used to mount the part to the printed circuit board.

(6) **Part marking:** There may be an additional marking, which relates to the logo, the lot trace code information, or the environmental category of the part.

Multiple part markings will be inside parentheses. Only one part marking contained in parentheses and separated by a "~" will appear on a part. If a line is indented then it is a continuation of the previous line and the two combined represent the entire part marking for that device.

Important Information and Disclaimer: The information provided on this page represents TI's knowledge and belief as of the date that it is provided. TI bases its knowledge and belief on information provided by third parties, and makes no representation or warranty as to the accuracy of such information. Efforts are underway to better integrate information from third parties. TI has taken and continues to take reasonable steps to provide representative and accurate information but may not have conducted destructive testing or chemical analysis on incoming materials and chemicals. TI and TI suppliers consider certain information to be proprietary, and thus CAS numbers and other limited information may not be available for release.

In no event shall TI's liability arising out of such information exceed the total purchase price of the TI part(s) at issue in this document sold by TI to Customer on an annual basis.

OTHER QUALIFIED VERSIONS OF SN74AHC1G00 :

- Automotive : SN74AHC1G00-Q1

NOTE: Qualified Version Definitions:

- Automotive - Q100 devices qualified for high-reliability automotive applications targeting zero defects

TAPE AND REEL INFORMATION

REEL DIMENSIONS

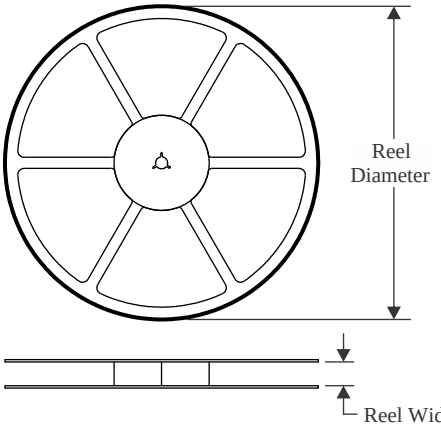

TAPE DIMENSIONS

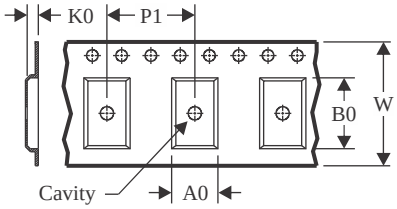

A0	Dimension designed to accommodate the component width
B0	Dimension designed to accommodate the component length
K0	Dimension designed to accommodate the component thickness
W	Overall width of the carrier tape
P1	Pitch between successive cavity centers

QUADRANT ASSIGNMENTS FOR PIN 1 ORIENTATION IN TAPE

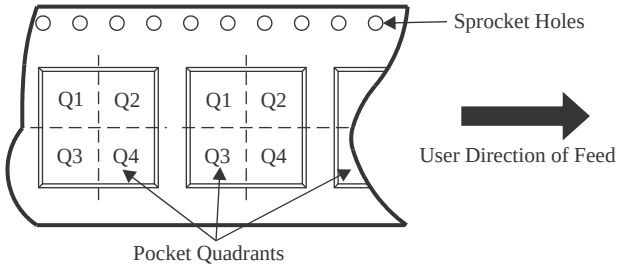

*All dimensions are nominal

Device	Package Type	Package Drawing	Pins	SPQ	Reel Diameter (mm)	Reel Width W1 (mm)	A0 (mm)	B0 (mm)	K0 (mm)	P1 (mm)	W (mm)	Pin1 Quadrant
SN74AHC1G00DBVR	SOT-23	DBV	5	3000	180.0	8.4	3.2	3.2	1.4	4.0	8.0	Q3
SN74AHC1G00DBVR	SOT-23	DBV	5	3000	180.0	8.4	3.2	3.2	1.4	4.0	8.0	Q3
SN74AHC1G00DBVRG4	SOT-23	DBV	5	3000	178.0	9.0	3.23	3.17	1.37	4.0	8.0	Q3
SN74AHC1G00DCKR	SC70	DCK	5	3000	180.0	8.4	2.3	2.5	1.2	4.0	8.0	Q3
SN74AHC1G00DCKRG4	SC70	DCK	5	3000	178.0	9.2	2.4	2.4	1.22	4.0	8.0	Q3
SN74AHC1G00DCKTG4	SC70	DCK	5	250	178.0	9.2	2.4	2.4	1.22	4.0	8.0	Q3
SN74AHC1G00DRLR	SOT-5X3	DRL	5	4000	180.0	8.4	1.98	1.78	0.69	4.0	8.0	Q3

TAPE AND REEL BOX DIMENSIONS

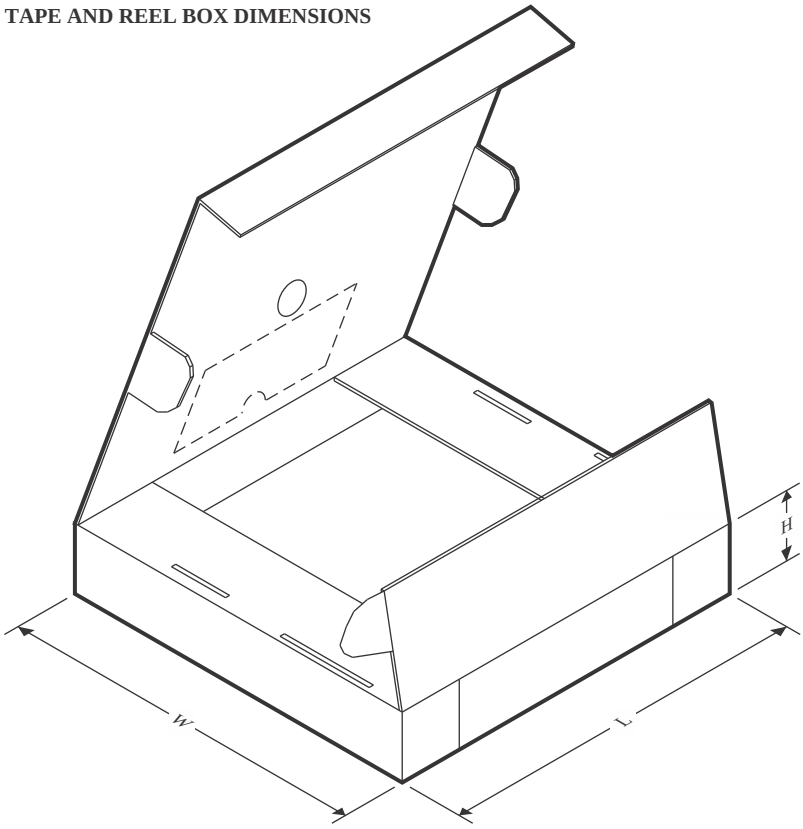

*All dimensions are nominal

Device	Package Type	Package Drawing	Pins	SPQ	Length (mm)	Width (mm)	Height (mm)
SN74AHC1G00DBVR	SOT-23	DBV	5	3000	210.0	185.0	35.0
SN74AHC1G00DBVR	SOT-23	DBV	5	3000	210.0	185.0	35.0
SN74AHC1G00DBVRG4	SOT-23	DBV	5	3000	180.0	180.0	18.0
SN74AHC1G00DCKR	SC70	DCK	5	3000	210.0	185.0	35.0
SN74AHC1G00DCKRG4	SC70	DCK	5	3000	180.0	180.0	18.0
SN74AHC1G00DCKTG4	SC70	DCK	5	250	180.0	180.0	18.0
SN74AHC1G00DRLR	SOT-5X3	DRL	5	4000	202.0	201.0	28.0

PACKAGE OUTLINE

DBV0005A

SOT-23 - 1.45 mm max height

SMALL OUTLINE TRANSISTOR

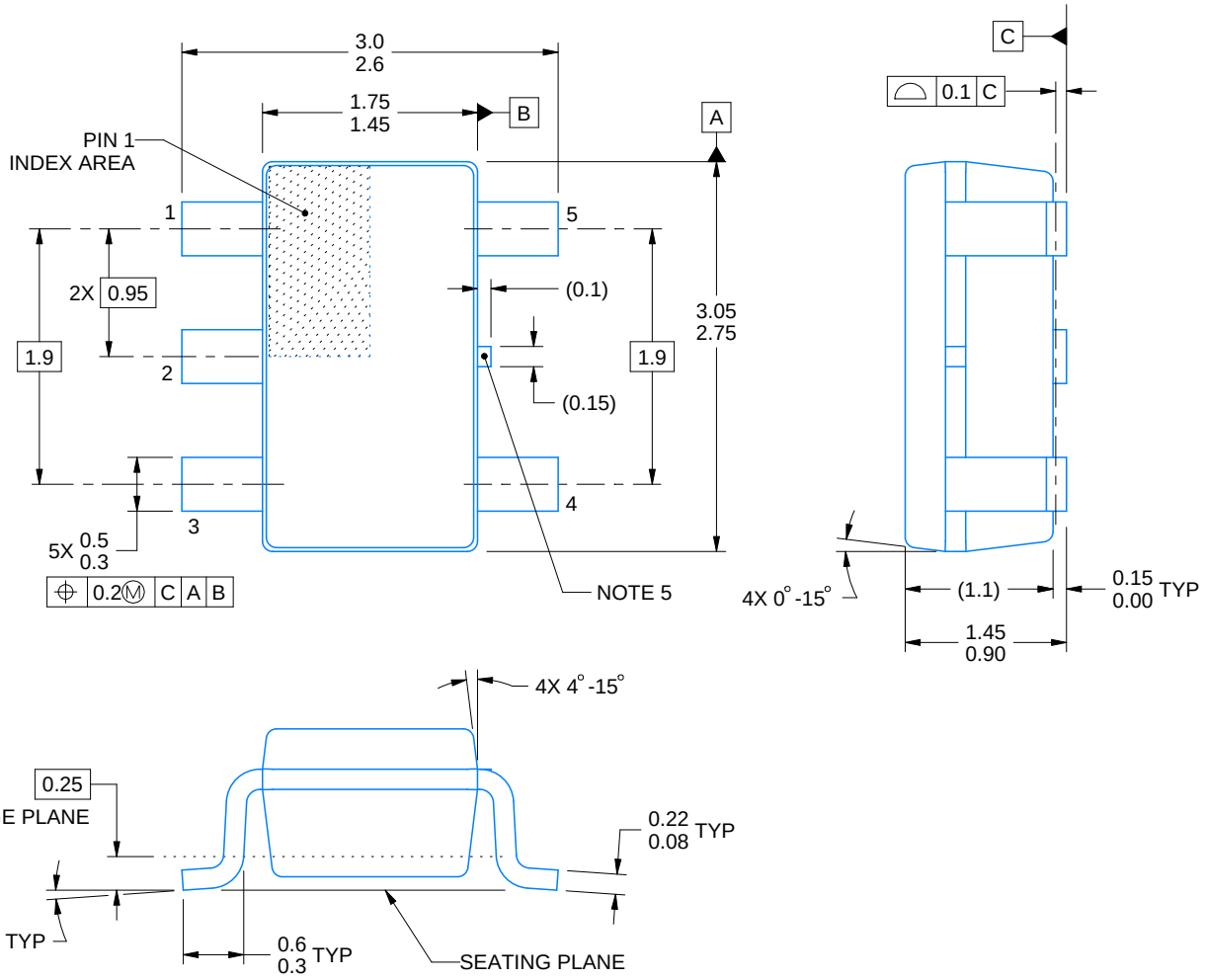

4214839/K 08/2024

NOTES:

1. All linear dimensions are in millimeters. Any dimensions in parenthesis are for reference only. Dimensioning and tolerancing per ASME Y14.5M.
2. This drawing is subject to change without notice.
3. Refernce JEDEC MO-178.
4. Body dimensions do not include mold flash, protrusions, or gate burrs. Mold flash, protrusions, or gate burrs shall not exceed 0.25 mm per side.
5. Support pin may differ or may not be present.

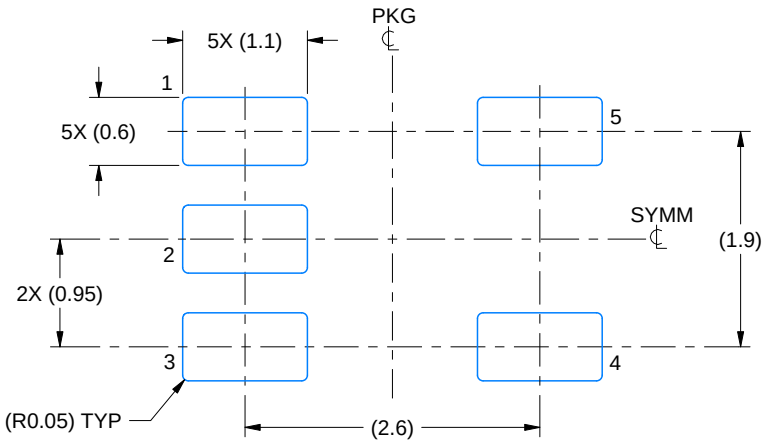

LAND PATTERN EXAMPLE
EXPOSED METAL SHOWN
SCALE:15X

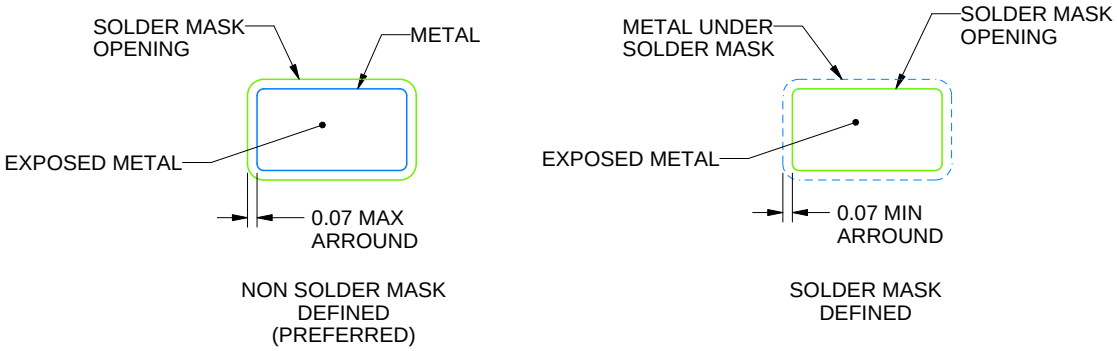

SOLDER MASK DETAILS

4214839/K 08/2024

NOTES: (continued)

6. Publication IPC-7351 may have alternate designs.
7. Solder mask tolerances between and around signal pads can vary based on board fabrication site.

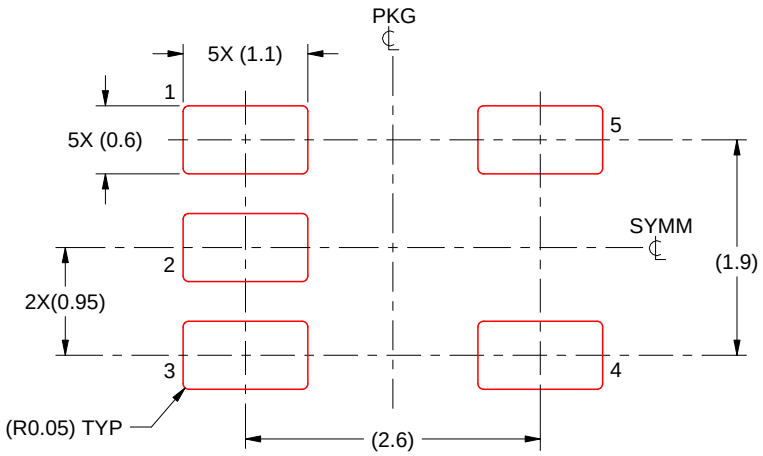

SOLDER PASTE EXAMPLE
BASED ON 0.125 mm THICK STENCIL
SCALE:15X

4214839/K 08/2024

NOTES: (continued)

8. Laser cutting apertures with trapezoidal walls and rounded corners may offer better paste release. IPC-7525 may have alternate design recommendations.
9. Board assembly site may have different recommendations for stencil design.

PACKAGE OUTLINE

DRL0005A

SOT - 0.6 mm max height

PLASTIC SMALL OUTLINE

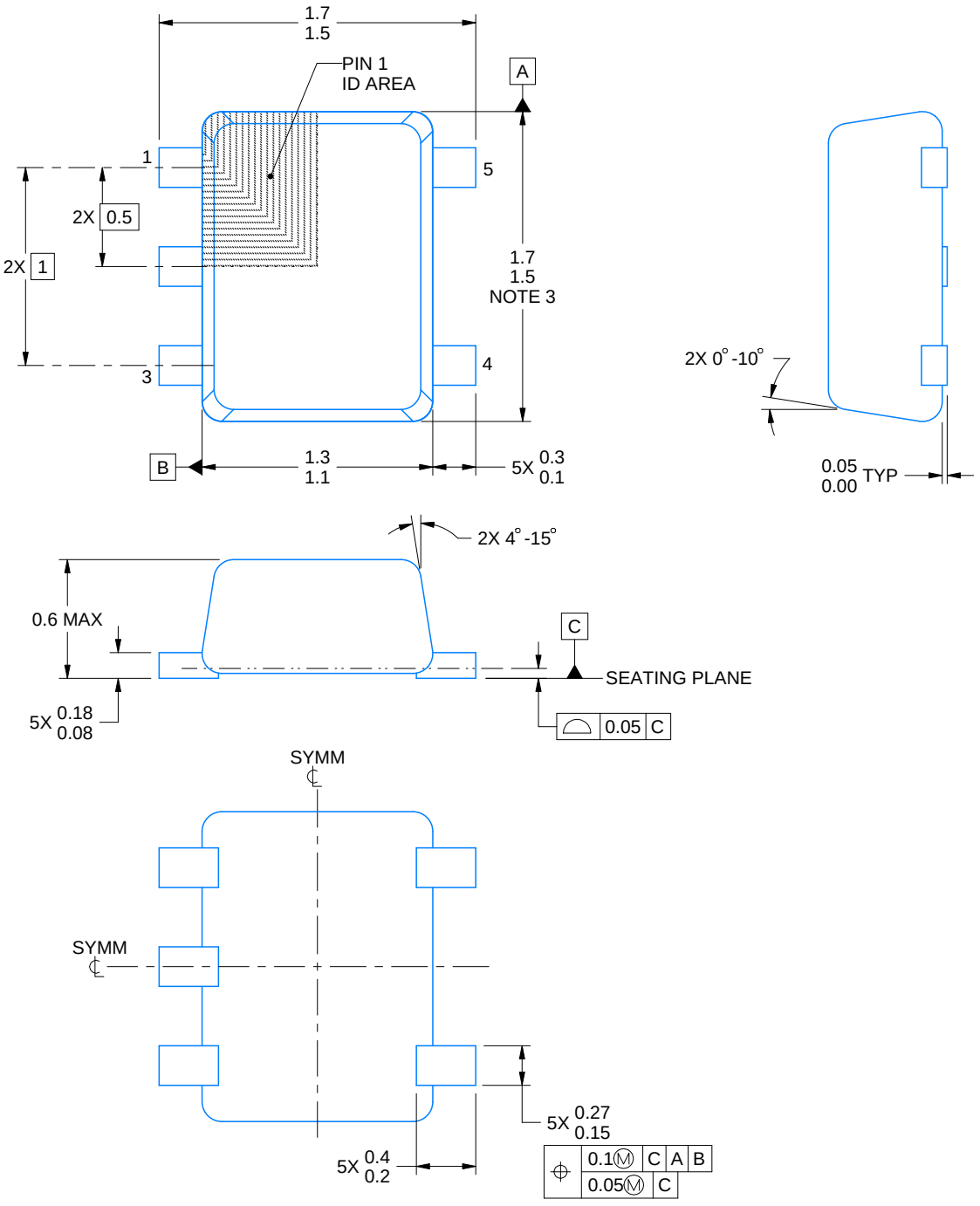

4220753/E 11/2024

NOTES:

1. All linear dimensions are in millimeters. Any dimensions in parenthesis are for reference only. Dimensioning and tolerancing per ASME Y14.5M.
2. This drawing is subject to change without notice.
3. This dimension does not include mold flash, protrusions, or gate burrs. Mold flash, protrusions, or gate burrs shall not exceed 0.15 mm per side.
4. Reference JEDEC registration MO-293 Variation UAAD-1

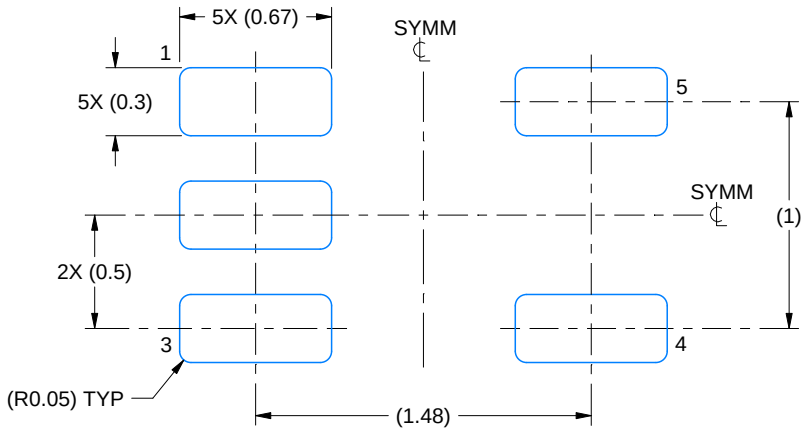

LAND PATTERN EXAMPLE
SCALE:30X

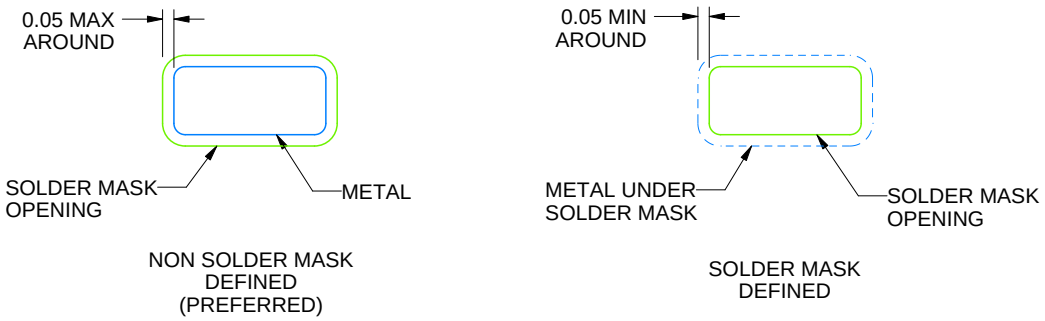

SOLDERMASK DETAILS

4220753/E 11/2024

NOTES: (continued)

5. Publication IPC-7351 may have alternate designs.
6. Solder mask tolerances between and around signal pads can vary based on board fabrication site.

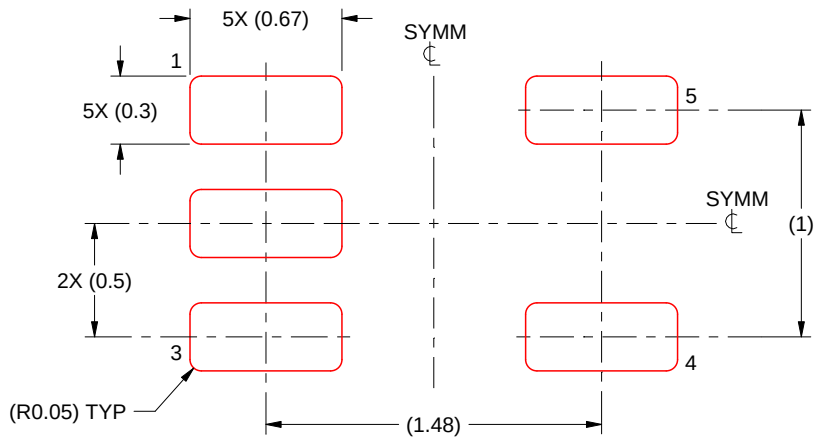

SOLDER PASTE EXAMPLE
BASED ON 0.1 mm THICK STENCIL
SCALE:30X

4220753/E 11/2024

NOTES: (continued)

7. Laser cutting apertures with trapezoidal walls and rounded corners may offer better paste release. IPC-7525 may have alternate design recommendations.
8. Board assembly site may have different recommendations for stencil design.

PACKAGE OUTLINE

DCK0005A

SOT - 1.1 max height

SMALL OUTLINE TRANSISTOR

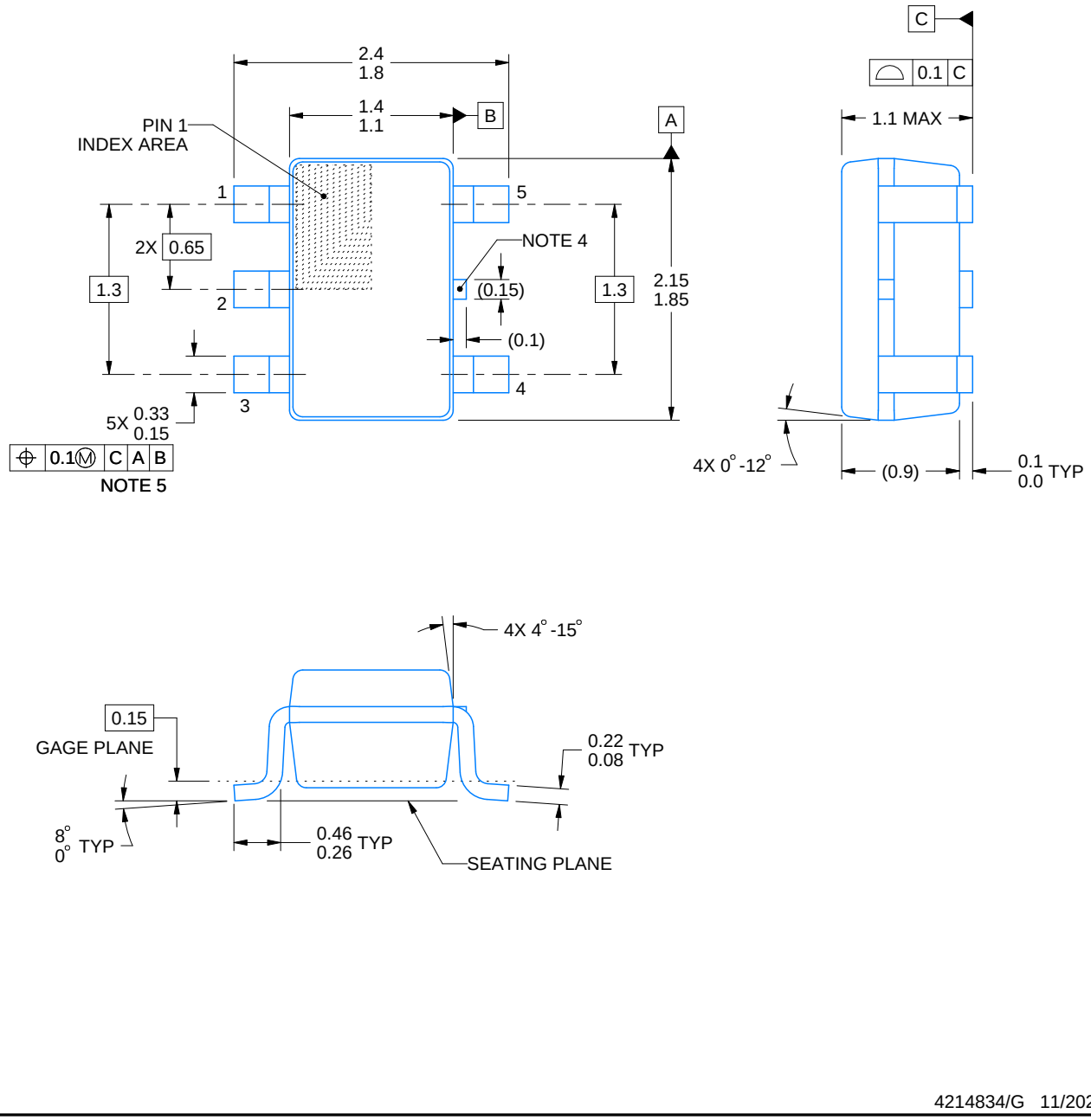

4214834/G 11/2024

NOTES:

1. All linear dimensions are in millimeters. Any dimensions in parenthesis are for reference only. Dimensioning and tolerancing per ASME Y14.5M.
2. This drawing is subject to change without notice.
3. Refernce JEDEC MO-203.
4. Support pin may differ or may not be present.
5. Lead width does not comply with JEDEC.
6. Body dimensions do not include mold flash, protrusions, or gate burrs. Mold flash, protrusions, or gate burrs shall not exceed 0.25mm per side

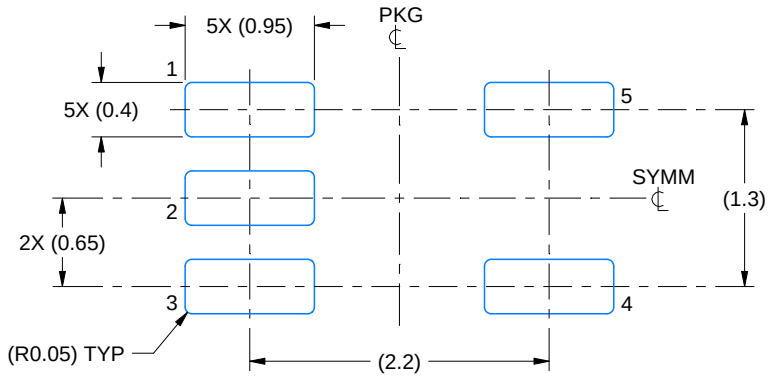

LAND PATTERN EXAMPLE
EXPOSED METAL SHOWN
SCALE:18X

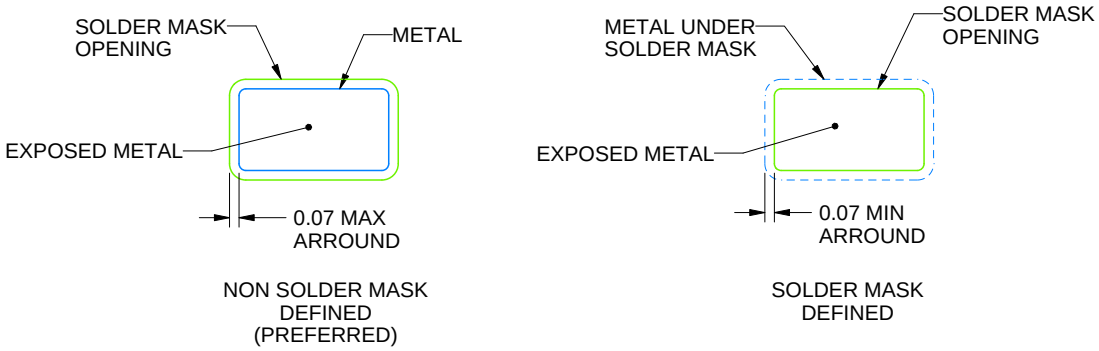

SOLDER MASK DETAILS

4214834/G 11/2024

NOTES: (continued)

7. Publication IPC-7351 may have alternate designs.
8. Solder mask tolerances between and around signal pads can vary based on board fabrication site.

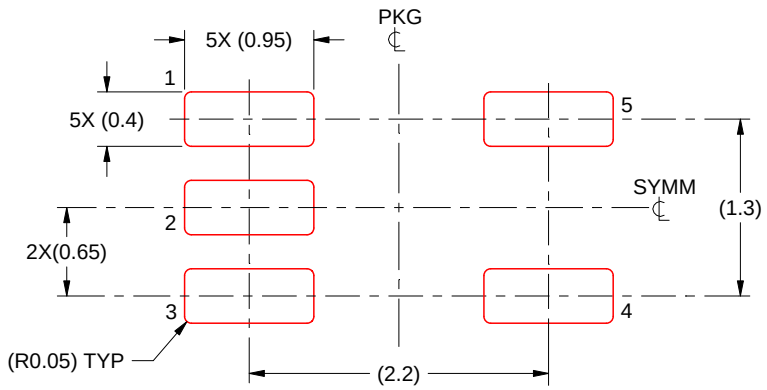

SOLDER PASTE EXAMPLE
BASED ON 0.125 THICK STENCIL
SCALE:18X

4214834/G 11/2024

NOTES: (continued)

9. Laser cutting apertures with trapezoidal walls and rounded corners may offer better paste release. IPC-7525 may have alternate design recommendations.
10. Board assembly site may have different recommendations for stencil design.

IMPORTANT NOTICE AND DISCLAIMER

TI PROVIDES TECHNICAL AND RELIABILITY DATA (INCLUDING DATA SHEETS), DESIGN RESOURCES (INCLUDING REFERENCE DESIGNS), APPLICATION OR OTHER DESIGN ADVICE, WEB TOOLS, SAFETY INFORMATION, AND OTHER RESOURCES “AS IS” AND WITH ALL FAULTS, AND DISCLAIMS ALL WARRANTIES, EXPRESS AND IMPLIED, INCLUDING WITHOUT LIMITATION ANY IMPLIED WARRANTIES OF MERCHANTABILITY, FITNESS FOR A PARTICULAR PURPOSE OR NON-INFRINGEMENT OF THIRD PARTY INTELLECTUAL PROPERTY RIGHTS.

These resources are intended for skilled developers designing with TI products. You are solely responsible for (1) selecting the appropriate TI products for your application, (2) designing, validating and testing your application, and (3) ensuring your application meets applicable standards, and any other safety, security, regulatory or other requirements.

These resources are subject to change without notice. TI grants you permission to use these resources only for development of an application that uses the TI products described in the resource. Other reproduction and display of these resources is prohibited. No license is granted to any other TI intellectual property right or to any third party intellectual property right. TI disclaims responsibility for, and you will fully indemnify TI and its representatives against, any claims, damages, costs, losses, and liabilities arising out of your use of these resources.

TI’s products are provided subject to TI’s Terms of Sale or other applicable terms available either on ti.com or provided in conjunction with such TI products. TI’s provision of these resources does not expand or otherwise alter TI’s applicable warranties or warranty disclaimers for TI products.

TI objects to and rejects any additional or different terms you may have proposed.

Mailing Address: Texas Instruments, Post Office Box 655303, Dallas, Texas 75265
Copyright © 2025, Texas Instruments Incorporated

ENTEGRECİ

Bu belge www.entegreci.com üzerinden sunulmaktadır.

Elektronik komponent tedarikinde Entegreci

Entegreci, Eskişehir merkezli, Türkiye geneline satış yapan bir elektronik komponent mağazasıdır. Entegreler (IC), mikrodenetleyiciler, transistörler, diyotlar, pasif elemanlar, konnektörler, modüller ve geliştirme kartları tek adetten seri üretim adetlerine kadar satılır. Ürün sayfalarında güncel stok durumunu, fiyatı ve datasheet bağlantısını bulabilirsiniz.

Parça koduyla arama

Üretici parça numarasını yazın; stok ve fiyatı hemen görün.

www.entegreci.com

Ürün kategorileri

Entegreden kapasitöre tüm elektronik komponent kategorileri.

Kategorilere göz atın

Üreticiler

Aradığınız üreticinin ürünlerini tek sayfada inceleyin.

Üreticileri görün

Toplu alım ve teklif

Listede olmayan ya da yüksek adetli parçalar için teklif isteyin.

Teklif isteyin

www.entegreci.com | **destek@entegreci.com** | **0850 305 90 34**

Entegreci is an online electronic components store based in Türkiye. Search by manufacturer part number to see stock, prices and datasheets for integrated circuits, microcontrollers, transistors, passive components and connectors, or request a quote for parts that are not listed.

Bu sayfa Entegreci tarafından eklenmiştir. Belgenin önceki sayfaları asıl yayıncısına aittir ve içeriği değiştirilmemiştir; en güncel sürüm için belgenin yayıncısına başvurun.