Silicon NPN Planar RF Transistor

Features

- High power gain
- Low noise figure
- High transition frequency
- Lead (Pb)-free component
- Component in accordance to RoHS 2002/95/EC and WEEE 2002/96/EC

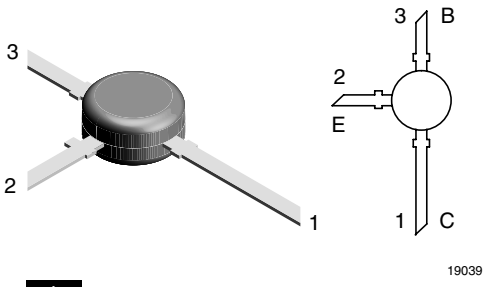

19039

Electrostatic sensitive device.
Observe precautions for handling.

Applications

- RF amplifier up to GHz range specially for wide band antenna amplifier

Mechanical Data

Case: TO-50 plastic case
Weight: approx. 111 mg
Pinning: 1 = collector, 2 = emitter, 3 = base

Parts Table

Part	Ordering code	Marking	Remarks	Package
BFR91A	BFR91AGELB	BFR91A	Packed in Bulk	TO-50(3)

Absolute Maximum Ratings

T_{amb} = 25 °C, unless otherwise specified

Parameter	Test condition	Symbol	Value	Unit
Collector base voltage		V_{CBO}	20	V
Collector emitter voltage		V_{CEO}	12	V
Emitter base voltage		V_{EBO}	2	V
Collector current		I_C	50	mA
Total power dissipation	$T_{amb} \leq 60$ °C	P_{tot}	300	mW
Junction temperature		T_j	150	°C
Storage temperature range		T_{stg}	- 65 to + 150	°C

Maximum Thermal Resistance

Parameter	Test condition	Symbol	Value	Unit
Junction ambient	1)	R_{thJA}	300	K/W

Note:
1) on glass fibre printed board (40 x 25 x 1.5) mm^3 plated with 35 µm Cu

Electrical DC Characteristics

T_{amb} = 25 °C, unless otherwise specified

Parameter	Test condition	Symbol	Min	Typ.	Max	Unit
Collector emitter cut-off current	V_{CE} = 20 V, V_{BE} = 0	I_{CES}			100	µA
Collector base cut-off current	V_{CB} = 20 V, I_E = 0	I_{CBO}			100	nA
Emitter base cut-off current	V_{EB} = 2 V, I_C = 0	I_{EBO}			10	µA
Collector emitter breakdown voltage	I_C = 1 mA, I_B = 0	$V_{(BR)CEO}$	12			V
Collector emitter saturation voltage	I_C = 50 mA, I_B = 5 mA	V_{CEsat}		0.1	0.4	V
DC forward current transfer ratio	V_{CE} = 5 V, I_C = 30 mA	h_{FE}	40	90	150	

Electrical AC Characteristics

T_{amb} = 25 °C, unless otherwise specified

Parameter	Test condition	Symbol	Min	Typ.	Max	Unit
Transition frequency	V_{CE} = 5 V, I_C = 30 mA, f = 500 MHz	f_T		6		GHz
Collector base capacitance	V_{CB} = 10 V, f = 1 MHz	C_{cb}		0.4		pF
Collector emitter capacitance	V_{CB} = 5 V, f = 1 MHz	C_{ce}		0.3		pF
Emitter base capacitance	V_{EB} = 0.5 V, f = 1 MHz	C_{eb}		1.5		pF
Noise figure	V_{CE} = 8 V, Z_S = 50 Ω, f = 800 MHz, I_C = 5 mA	F		1.6		dB
	V_{CE} = 8 V, Z_S = 50 Ω, f = 800 MHz, I_C = 30 mA	F		2.3		dB
Power gain	V_{CE} = 8 V, I_C = 30 mA, Z_S = 50 Ω, Z_L = Z_{Lopt}, f = 800 MHz	G_{pe}		14		dB
Linear output voltage - two tone intermodulation test	V_{CE} = 8 V, I_C = 30 mA, d_{IM} = 60 dB, f_1 = 806 MHz, f_2 = 810 MH, Z_S = Z_L = 50 Ω	$V_1 = V_2$		280		mV
Third order intercept point	V_{CE} = 8 V, I_C = 30 mA, f = 800 MHz	IP_3		32		dBm

Common Emitter S-Parameters

Z_0 = 50 Ω, T_{amb} = 25 °C, unless otherwise specified

V_{CE}/V	I_C/mA	f/MHz	S11		S21		S12		S22	
			LIN MAG	ANG	LIN MAG	ANG	LIN MAG	ANG	LIN MAG	ANG
				deg		deg		deg		deg
8	2	100	0.92	- 22.1	6.38	162.8	0.02	78.4	0.9	- 8.1
		300	0.78	- 61.3	5.42	134.7	0.05	61.5	0.88	- 20.8
		500	0.64	- 92.7	4.38	114.3	0.07	52.8	0.79	- 28.2
		800	0.51	- 128.0	3.19	92.9	0.09	49.3	0.73	- 35.9
		1000	0.45	- 146.3	2.65	82.3	0.10	50.4	0.71	- 40.6
		1200	0.41	- 161.4	2.27	73.8	0.11	53.1	0.70	- 45.1
		1500	0.37	177.9	1.85	63.0	0.12	57.8	0.71	- 52.3
		1800	0.34	159.7	1.58	53.4	0.14	61.8	0.73	- 60.0
		2000	0.32	149.7	1.44	48.5	0.16	63.8	0.74	- 64.9
8	5	100	0.79	- 31.8	13.51	153.5	0.02	75.1	0.92	- 13.4

V_{CE}/V	I_C/mA	f/MHz	S11		S21		S12		S22	
			LIN MAG	ANG	LIN MAG	ANG	LIN MAG	ANG	LIN MAG	ANG
				deg		deg		deg		deg
		300	0.54	- 78.6	9.24	119.9	0.04	61.9	0.73	- 26.4
		500	0.40	- 107.8	6.44	101.9	0.06	61.0	0.64	- 31.1
		800	0.30	- 138.4	4.30	85.7	0.09	63.7	0.59	- 36.3
		1000	0.27	- 153.8	3.50	77.8	0.10	65.0	0.58	- 41.3
		1200	0.25	- 167.2	2.98	71.1	0.12	65.7	0.58	- 45.8
		1500	0.22	175.1	2.41	62.4	0.14	66.0	0.59	- 53.2
		1800	0.21	157.8	2.06	54.2	0.18	65.3	0.61	- 60.6
		2000	0.20	149.4	1.88	49.7	0.19	64.5	0.62	- 65.5
8	10	100	0.63	- 43.0	21.15	143.4	0.02	72.5	0.85	- 18.5
		300	0.35	- 91.7	11.55	109.2	0.04	67.2	0.62	- 28.0
		500	0.25	- 117.7	7.47	95.1	0.06	69.5	0.55	- 30.6
		800	0.20	- 145.2	4.85	82.1	0.09	71.1	0.53	- 36.4
		1000	0.18	- 160.0	3.93	75.5	0.11	71.1	0.52	- 41.3
		1200	0.17	- 171.7	3.32	69.8	0.13	70.4	0.52	- 45.9
		1500	0.16	173.5	2.70	62.0	0.16	68.7	0.53	- 53.7
		1800	0.15	153.9	2.30	54.6	0.19	66.4	0.54	- 61.4
		2000	0.15	148.4	2.09	50.3	0.21	64.8	0.55	- 66.5
8	20	100	0.44	- 55.8	28.24	132.6	0.02	72.8	0.76	- 22.3
		300	0.22	- 103.9	12.79	102.0	0.04	74.1	0.54	- 26.5
		500	0.16	- 127.5	8.00	90.7	0.06	75.8	0.50	- 28.6
		800	0.14	- 153.3	5.13	79.8	0.09	75.4	0.49	- 35.2
		1000	0.13	- 165.9	4.15	73.9	0.11	74.2	0.48	- 40.4
		1200	0.12	- 177.3	3.51	68.7	0.13	72.9	0.49	- 45.5
		1500	0.12	170.1	2.84	61.5	0.17	70.0	0.50	- 53.6
		1800	0.12	152.3	2.42	54.4	0.20	67.1	0.51	- 61.6
		2000	0.11	147.1	2.21	50.6	0.22	65.0	0.52	- 66.7
8	30	100	0.34	- 64.0	31.01	127.3	0.02	73.3	0.71	- 23.3
		300	0.17	- 112.9	13.08	99.1	0.04	77.2	0.52	- 24.9
		500	0.14	- 136.2	8.10	88.9	0.06	77.8	0.49	- 27.3
		800	0.13	- 159.4	5.17	78.7	0.09	76.8	0.48	- 34.3
		1000	0.12	- 171.4	4.18	73.0	0.11	75.3	0.48	- 39.6
		1200	0.12	178.6	3.53	68.0	0.13	73.6	0.48	- 45.0
		1500	0.12	165.7	2.87	61.1	0.17	70.5	0.49	- 53.3
		1800	0.11	147.8	2.44	54.2	0.20	67.4	0.50	- 61.3
		2000	0.11	143.7	2.23	50.3	0.22	65.4	0.51	- 66.6

Typical Characteristics

T_{amb} = 25 °C unless otherwise specified

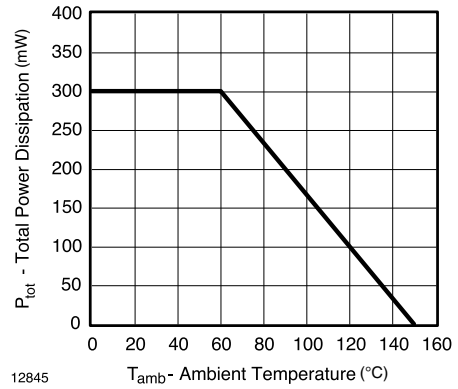

Figure 1. Total Power Dissipation vs. Ambient Temperature

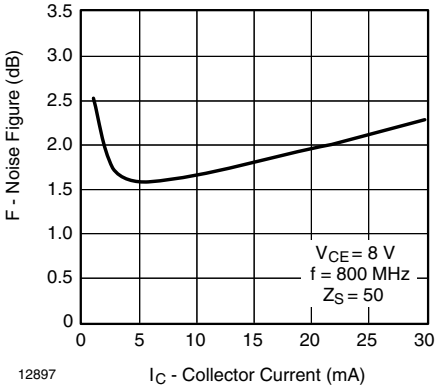

Figure 4. Noise Figure vs. Collector Current

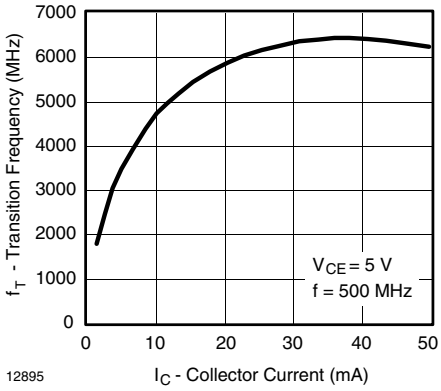

Figure 2. Transition Frequency vs. Collector Current

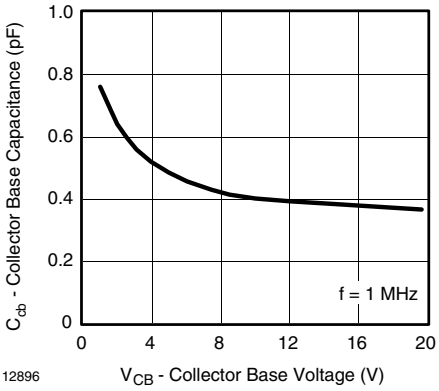

Figure 3. Collector Base Capacitance vs. Collector Base Voltage

V_{CE} = 10 V, I_C = 10 mA, Z_0 = 50 Ω

S_{11}

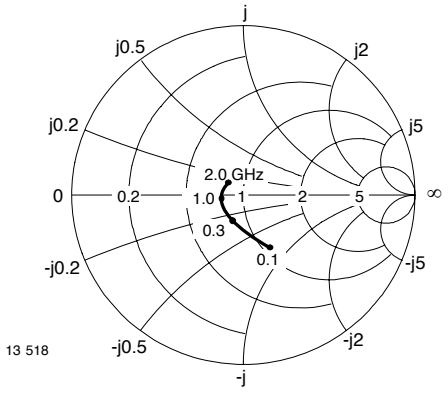

Figure 5. Input Reflection Coefficient

S_{12}

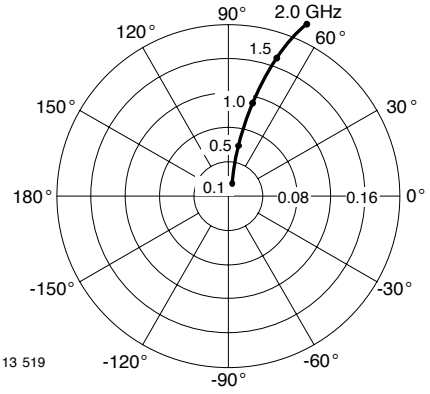

Figure 7. Reverse Transmission Coefficient

S_{21}

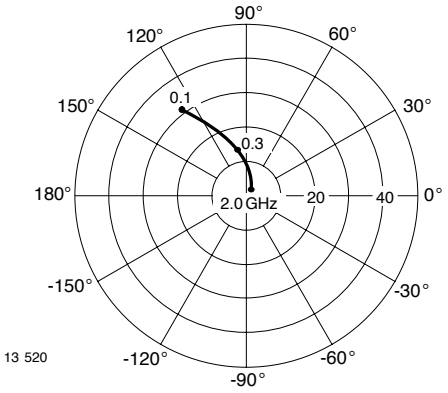

Figure 6. Forward Transmission Coefficient

S_{22}

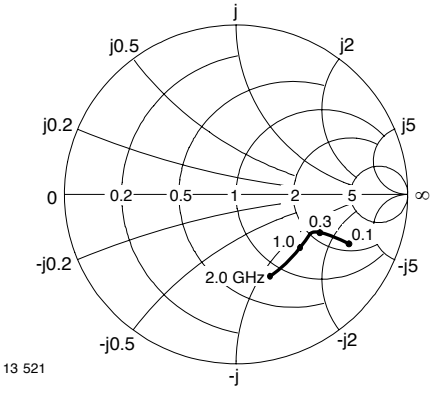

Figure 8. Output Reflection Coefficient

Package Dimensions in millimeters: TO-50

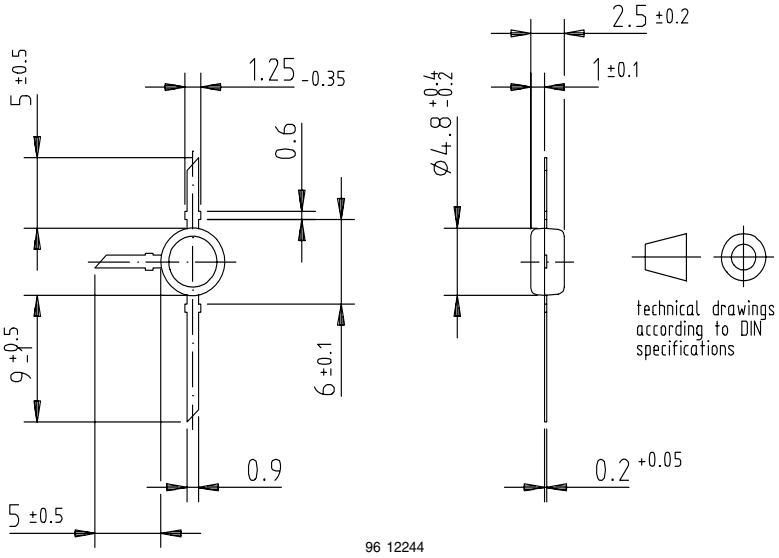

Ozone Depleting Substances Policy Statement

It is the policy of Vishay Semiconductor GmbH to

1. Meet all present and future national and international statutory requirements.
2. Regularly and continuously improve the performance of our products, processes, distribution and operating systems with respect to their impact on the health and safety of our employees and the public, as well as their impact on the environment.

It is particular concern to control or eliminate releases of those substances into the atmosphere which are known as ozone depleting substances (ODSs).

The Montreal Protocol (1987) and its London Amendments (1990) intend to severely restrict the use of ODSs and forbid their use within the next ten years. Various national and international initiatives are pressing for an earlier ban on these substances.

Vishay Semiconductor GmbH has been able to use its policy of continuous improvements to eliminate the use of ODSs listed in the following documents.

1. Annex A, B and list of transitional substances of the Montreal Protocol and the London Amendments respectively
2. Class I and II ozone depleting substances in the Clean Air Act Amendments of 1990 by the Environmental Protection Agency (EPA) in the USA
3. Council Decision 88/540/EEC and 91/690/EEC Annex A, B and C (transitional substances) respectively.

Vishay Semiconductor GmbH can certify that our semiconductors are not manufactured with ozone depleting substances and do not contain such substances.

We reserve the right to make changes to improve technical design
and may do so without further notice.
Parameters can vary in different applications. All operating parameters must be validated for each customer application by the customer. Should the buyer use Vishay Semiconductors products for any unintended or unauthorized application, the buyer shall indemnify Vishay Semiconductors against all claims, costs, damages, and expenses, arising out of, directly or indirectly, any claim of personal damage, injury or death associated with such unintended or unauthorized use.

Vishay Semiconductor GmbH, P.O.B. 3535, D-74025 Heilbronn, Germany

Disclaimer

All product specifications and data are subject to change without notice.

Vishay Intertechnology, Inc., its affiliates, agents, and employees, and all persons acting on its or their behalf (collectively, “Vishay”), disclaim any and all liability for any errors, inaccuracies or incompleteness contained herein or in any other disclosure relating to any product.

Vishay disclaims any and all liability arising out of the use or application of any product described herein or of any information provided herein to the maximum extent permitted by law. The product specifications do not expand or otherwise modify Vishay’s terms and conditions of purchase, including but not limited to the warranty expressed therein, which apply to these products.

No license, express or implied, by estoppel or otherwise, to any intellectual property rights is granted by this document or by any conduct of Vishay.

The products shown herein are not designed for use in medical, life-saving, or life-sustaining applications unless otherwise expressly indicated. Customers using or selling Vishay products not expressly indicated for use in such applications do so entirely at their own risk and agree to fully indemnify Vishay for any damages arising or resulting from such use or sale. Please contact authorized Vishay personnel to obtain written terms and conditions regarding products designed for such applications.

Product names and markings noted herein may be trademarks of their respective owners.

ENTEGRECİ

Bu belge www.entegreci.com üzerinden sunulmaktadır.

Elektronik komponent tedarikinde Entegreci

Entegreci, Eskişehir merkezli, Türkiye geneline satış yapan bir elektronik komponent mağazasıdır. Entegreler (IC), mikrodenetleyiciler, transistörler, diyotlar, pasif elemanlar, konnektörler, modüller ve geliştirme kartları tek adetten seri üretim adetlerine kadar satılır. Ürün sayfalarında güncel stok durumunu, fiyatı ve datasheet bağlantısını bulabilirsiniz.

Parça koduyla arama

Üretici parça numarasını yazın; stok ve fiyatı hemen görün.

www.entegreci.com

Ürün kategorileri

Entegreden kapasitöre tüm elektronik komponent kategorileri.

Kategorilere göz atın

Üreticiler

Aradığınız üreticinin ürünlerini tek sayfada inceleyin.

Üreticileri görün

Toplu alım ve teklif

Listede olmayan ya da yüksek adetli parçalar için teklif isteyin.

Teklif isteyin

www.entegreci.com | **destek@entegreci.com** | **0850 305 90 34**

Entegreci is an online electronic components store based in Türkiye. Search by manufacturer part number to see stock, prices and datasheets for integrated circuits, microcontrollers, transistors, passive components and connectors, or request a quote for parts that are not listed.

Bu sayfa Entegreci tarafından eklenmiştir. Belgenin önceki sayfaları asıl yayıncısına aittir ve içeriği değiştirilmemiştir; en güncel sürüm için belgenin yayıncısına başvurun.