5V/1.8A 150KHz 45V Buck DC to DC Converter For USB Interface XL2001

Features

- Wide 8V to 45V input voltage range.
- Fixed 5V output voltage.
- Maximum 1.8A output current.
- Fixed 150KHz switching frequency.
- Internal optimize power MOSFET.
- High efficiency up to 92%.
- Built in output short shutdown function.
- Excellent line and load regulation.
- Built in thermal shutdown function.
- Built in current limit function.
- Available in SOP8L package.

Applications

- Car Charger.
- Battery Charger.
- USB Power Supply.

General Description

The XL2001 is a 150 KHz fixed frequency PWM buck (step-down) DC/DC converter, capable of driving a 1.8A load with high efficiency, low ripple and excellent line and load regulation. Requiring a minimum number of external components, the regulator is simple to use and include internal frequency compensation and a fixed-frequency oscillator.

The XL2001 built in output short protection function. When short protection function happens, the chip will be shutdown. An internal compensation block is built in to minimize external component count.



Figure1. Package Type of XL2001

Pin Configurations

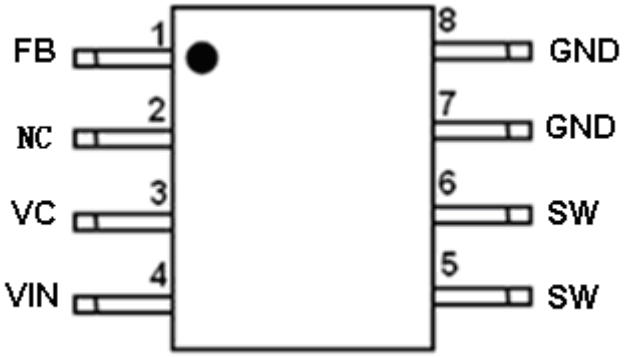

Figure2. Pin Configuration of XL2001 (Top View)

Table 1 Pin Description

Pin Number	Pin Name	Description
1	FB	Feedback Pin (FB). The feedback threshold voltage is 5V.
2	NC	No Connected.
3	VC	Internal Voltage Regulator Bypass Capacity. In typical system application, The VC pin connect a 1uf capacity to VIN.
4	VIN	Supply Voltage Input Pin. XL2001 operates from 8V to 45V DC voltage. Bypass Vin to GND with a suitably large capacitor to eliminate noise on the input.
5,6	SW	Power Switch Output Pin (SW). SW is the switch node that supplies power to the output.
7,8	GND	Ground Pin. Care must be taken in layout. This pin should be placed outside of the schottky diode to output capacitor ground path to prevent switching current spikes from inducing voltage noise into XL2001.

Function Block

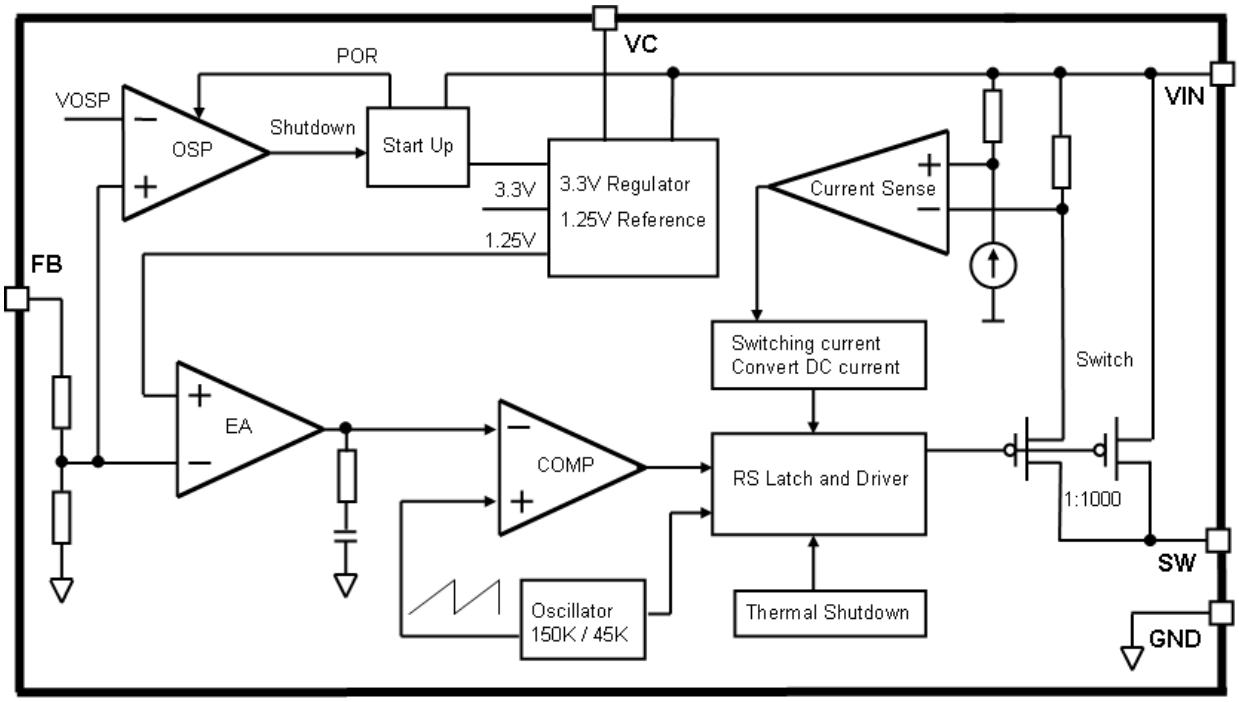

Figure3. Function Block Diagram of XL2001

Typical Application Circuit

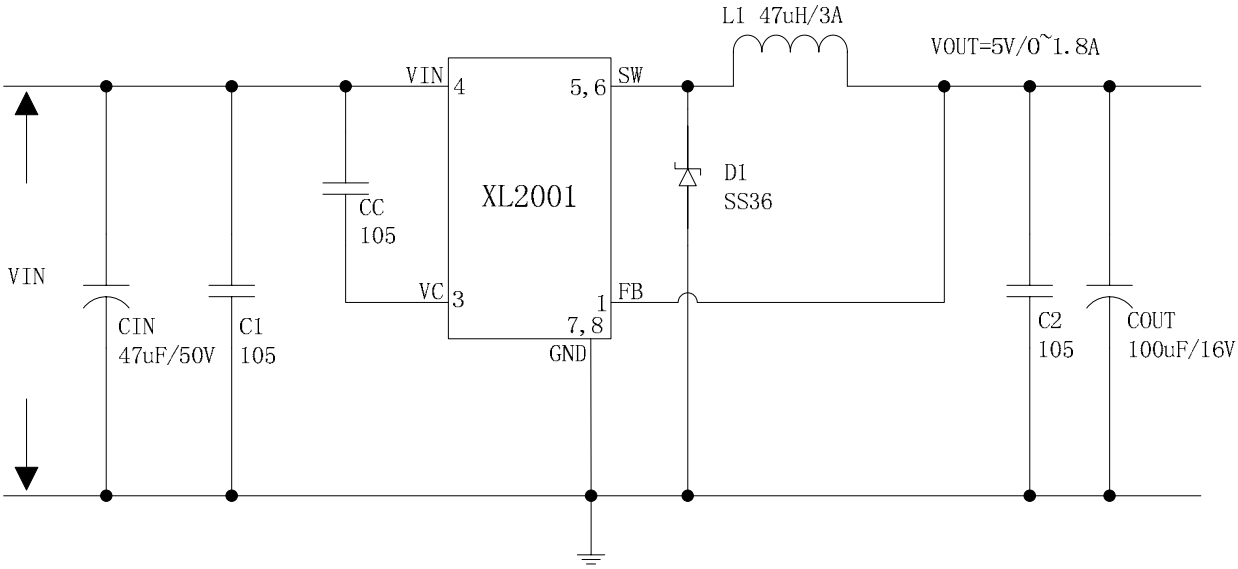

Figure4. XL2001Typical Application Circuit (VIN=8V~45V, VOUT=5V/1.8A)

Ordering Information

Order Information	Marking ID	Package Type	Packing Type Supplied As
XL2001E1	XL2001E1	SOP8L	2500 Units on Tape & Reel

XLSEMI Pb-free products, as designated with "E1" suffix in the par number, are RoHS compliant.

Absolute Maximum Ratings（Note1）

Parameter	Symbol	Value	Unit
Input Voltage	Vin	-0.3 to 50	V
Feedback Pin Voltage	V_{FB}	-0.3 to Vin	V
Output Switch Pin Voltage	V_{Output}	-0.3 to Vin	V
Power Dissipation	P_D	Internally limited	mW
Thermal Resistance (SOP8L) (Junction to Ambient, No Heatsink, Free Air)	R_{JA}	100	ºC/W
Operating Junction Temperature	T_J	-40 to 125	ºC
Storage Temperature	T_{STG}	-65 to 150	ºC
Lead Temperature (Soldering, 10 sec)	T_{LEAD}	260	ºC
ESD (HBM)		>2000	V

Note1: Stresses greater than those listed under Maximum Ratings may cause permanent damage to the device. This is a stress rating only and functional operation of the device at these or any other conditions above those indicated in the operation is not implied. Exposure to absolute maximum rating conditions for extended periods may affect reliability.

XL2001 Electrical Characteristics

T_a = 25℃;unless otherwise specified.

Symbol	Parameter	Test Condition	Min.	Typ.	Max.	Unit
System parameters test circuit figure4						
VFB	Feedback Voltage	Vin = 8V to 45V, Vout=5V Iload=0.5A to 1.8A	4.9	5	5.1	V
Efficiency	ŋ	Vin=12V ,Vout=5V Iout=1.8A	-	90	-	%

Electrical Characteristics (DC Parameters)

Vin = 12V, GND=0V, Vin & GND parallel connect a 47uF/50V capacitor; Iout=500mA, T_a = 25℃; the others floating unless otherwise specified.

Parameters	Symbol	Test Condition	Min.	Typ.	Max.	Unit
Input operation voltage	Vin		8		45	V
Quiescent Supply Current	I_q	V_{FB} =Vin		4.7	10	mA
Output Short Supply Current	Iosp				5	mA
Oscillator Frequency	Fosc		128	150	173	KHz
Switch Current Limit	I_L	V_{FB} =0		2		A
Output Power PMOS	Rdson	V_{FB}=0V, Vin=12V, I_{SW}=1.8A		60	80	mohm

Typical System Application (VOUT=5V/1.8A)

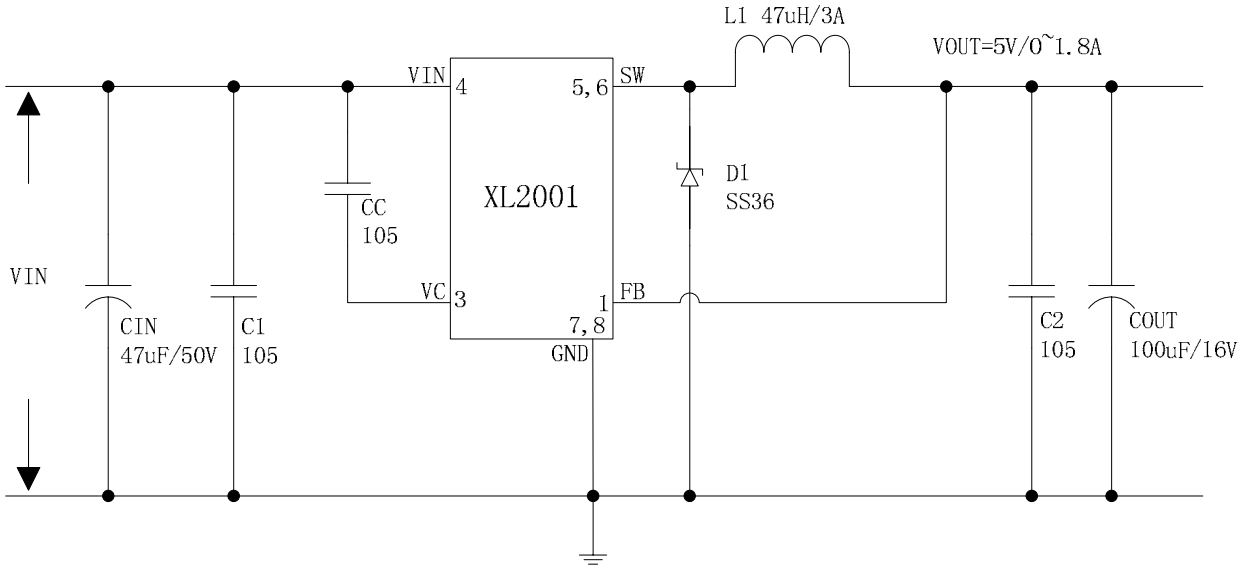

Figure5. XL2001System Parameters Test Circuit (VIN=8V~45V, VOUT=5V/1.8A)

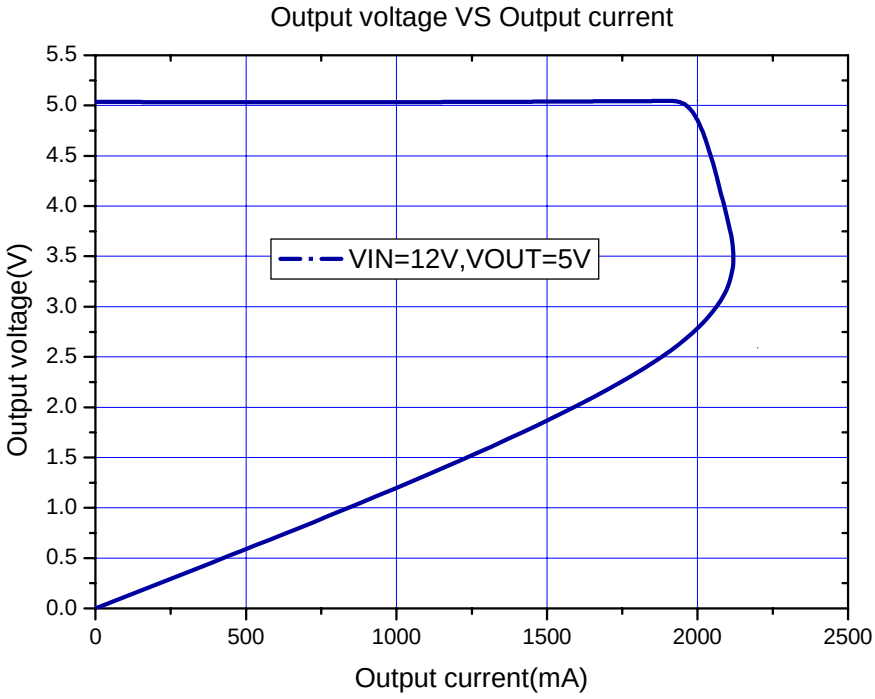

Figure6. XL2001 System Output Constant Current Curve

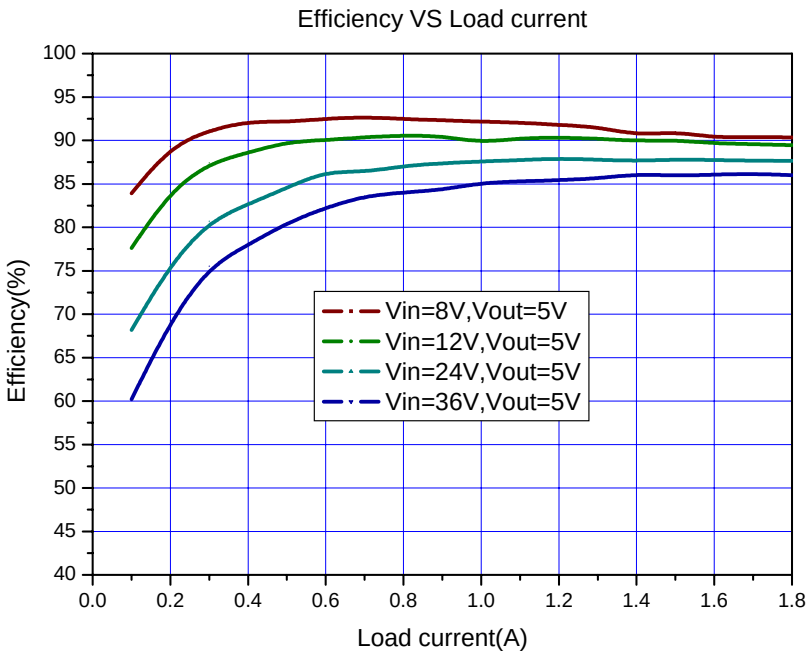

Figure7. XL2001 System Efficiency Curve

Output short shutdown function description

The output short shutdown function is built in XL2001. The short protection circuit monitors the output voltage, whenever FB pin voltage is below 1.5V, the short circuit protection circuit is triggered, the converter will be shutdown, input current less than 5mA.

When the short fault is removed，if output load is floating, then converter will restart up, the output voltage will return to normal; if output load isn't floating, then converter must be power reset , the output voltage will comeback.

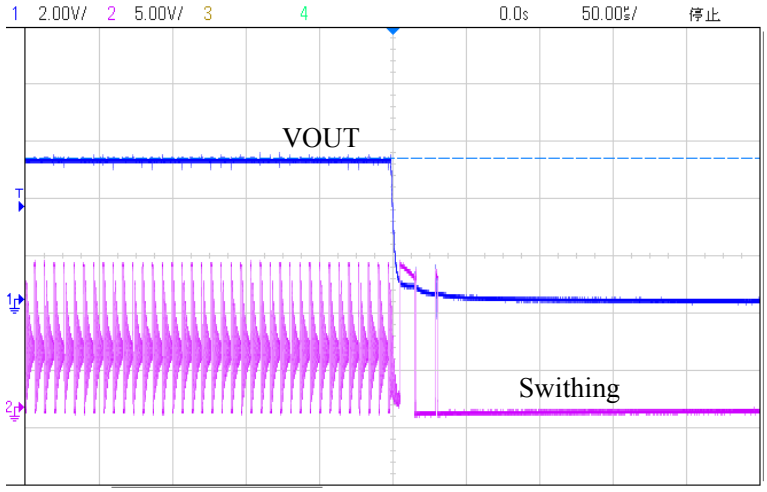

Figure8. The converter will be shutdown when output short happen.

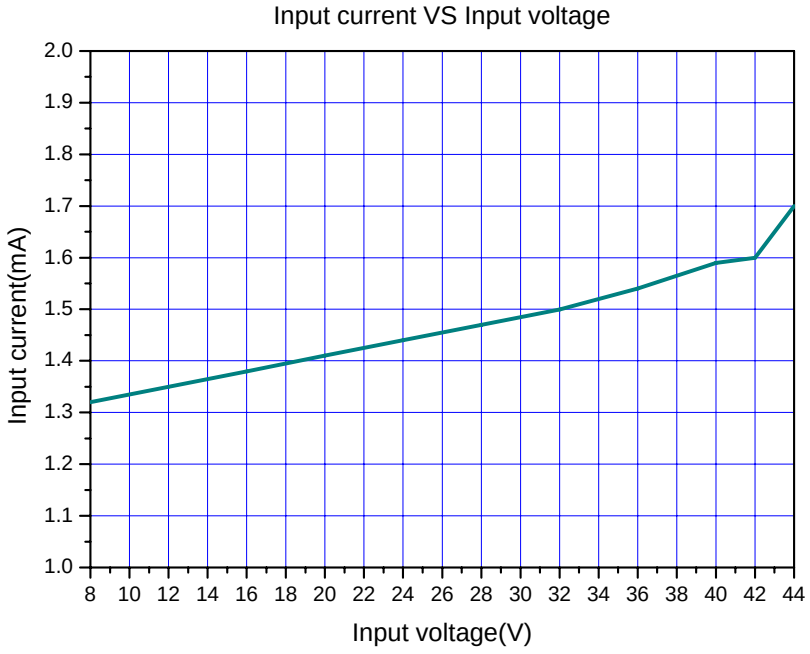

Figure9. The input current curve when output short happen.

Package Information

SOP8 Package Mechanical Dimensions

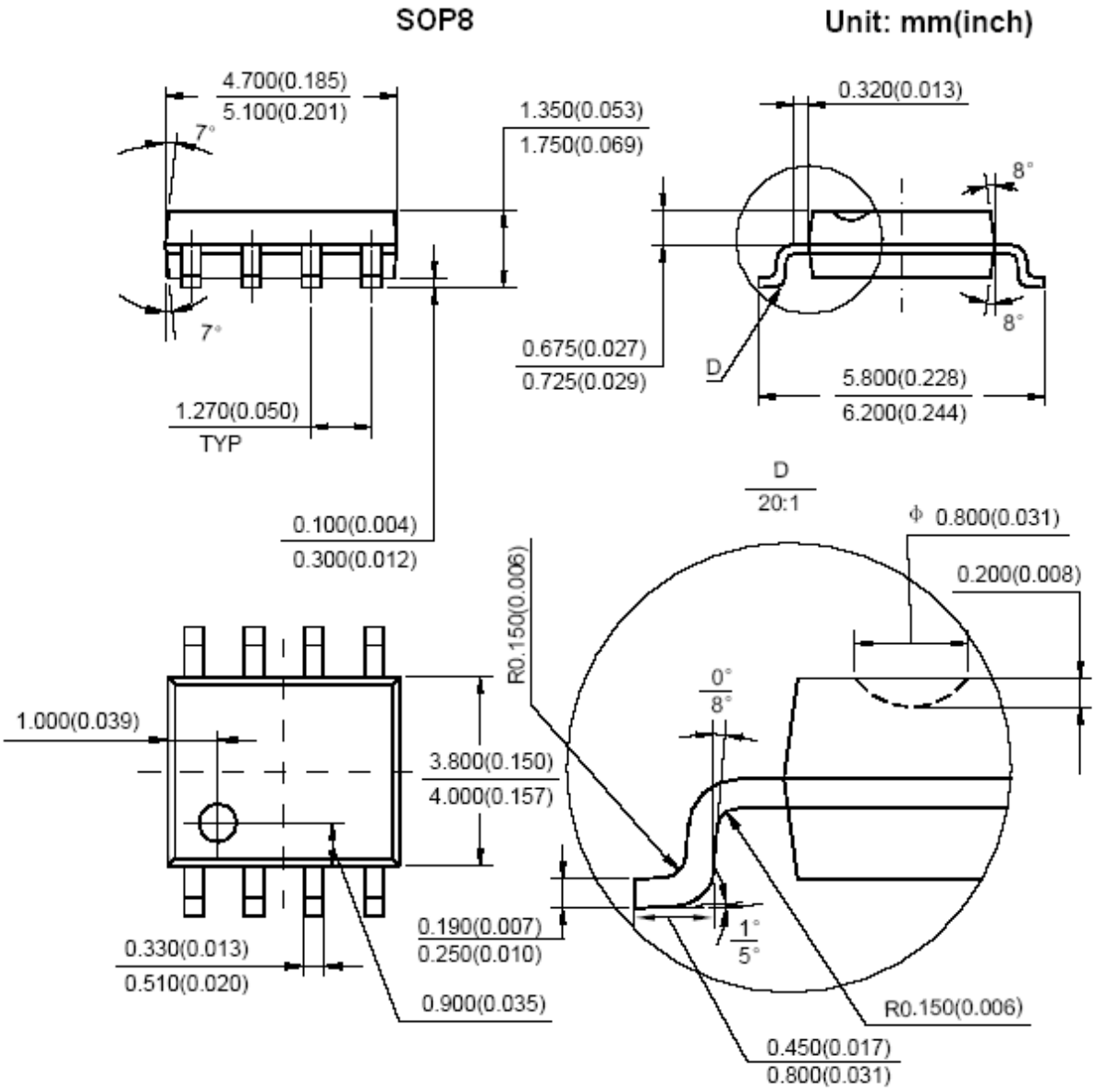

ENTEGRECİ

Bu belge www.entegreci.com üzerinden sunulmaktadır.

Elektronik komponent tedarikinde Entegreci

Entegreci, Eskişehir merkezli, Türkiye geneline satış yapan bir elektronik komponent mağazasıdır. Entegreler (IC), mikrodenetleyiciler, transistörler, diyotlar, pasif elemanlar, konnektörler, modüller ve geliştirme kartları tek adetten seri üretim adetlerine kadar satılır. Ürün sayfalarında güncel stok durumunu, fiyatı ve datasheet bağlantısını bulabilirsiniz.

Parça koduyla arama

Üretici parça numarasını yazın; stok ve fiyatı hemen görün.

www.entegreci.com

Ürün kategorileri

Entegreden kapasitöre tüm elektronik komponent kategorileri.

Kategorilere göz atın

Üreticiler

Aradığınız üreticinin ürünlerini tek sayfada inceleyin.

Üreticileri görün

Toplu alım ve teklif

Listede olmayan ya da yüksek adetli parçalar için teklif isteyin.

Teklif isteyin

www.entegreci.com | **destek@entegreci.com** | **0850 305 90 34**

Entegreci is an online electronic components store based in Türkiye. Search by manufacturer part number to see stock, prices and datasheets for integrated circuits, microcontrollers, transistors, passive components and connectors, or request a quote for parts that are not listed.

Bu sayfa Entegreci tarafından eklenmiştir. Belgenin önceki sayfaları asıl yayıncısına aittir ve içeriği değiştirilmemiştir; en güncel sürüm için belgenin yayıncısına başvurun.