3A 150kHz 40V Buck Li Battery Charger XL4101

Features

- Wide 4.5V to 40V Input Voltage Range
- Output Adjustable from 1.235V to 37V
- Minimum Drop Out 1.5V
- Fixed 150kHz Switching Frequency
- 3A Constant Output Current Capability
- Internal Optimize Power Transistor
- Excellent line and load regulation
- **With output constant current loop**
- Built in thermal shutdown function
- Built in current limit function
- **Built in output over voltage protection**
- TO263-5L package

General Description

The XL4101 is a 150KHz fixed frequency PWM buck (step-down) DC/DC converter, capable of driving a 3A load with high efficiency, low ripple and excellent line and load regulation. Requiring a minimum number of external components, the regulator is simple to use and include internal frequency compensation and a fixed-frequency oscillator.

The PWM control circuit is able to adjust the duty ratio linearly from 0 to 100%. An over current protection function is built inside. An internal compensation block is built in to minimize external component count.

Applications

- Car Charger
- Battery Charger



TO263-5L

Figure1. Package Type of XL4101

Pin Configurations

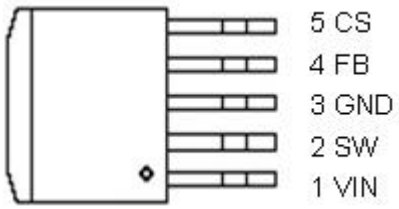

Figure2. Pin Configuration of XL4101 (Top View)

Table 1 Pin Description

Pin Number	Pin Name	Description
1	VIN	Supply Voltage Input Pin. XL4101 operates from a 4.5V to 40V DC voltage. Bypass Vin to GND with a suitably large capacitor to eliminate noise on the input.
2	SW	Power Switch Output Pin (SW). Output is the switch node that supplies power to the output.
3	GND	Ground Pin.(Note: **Connected the back exposed PAD to Pin3**.)
4	FB	Feedback Pin (FB). Through an external resistor divider network, Feedback senses the output voltage and regulates it. The feedback threshold voltage is 1.235V.
5	CS	Output Current Sense Pin; (Iload=0.155V/Rcs)

Function Block

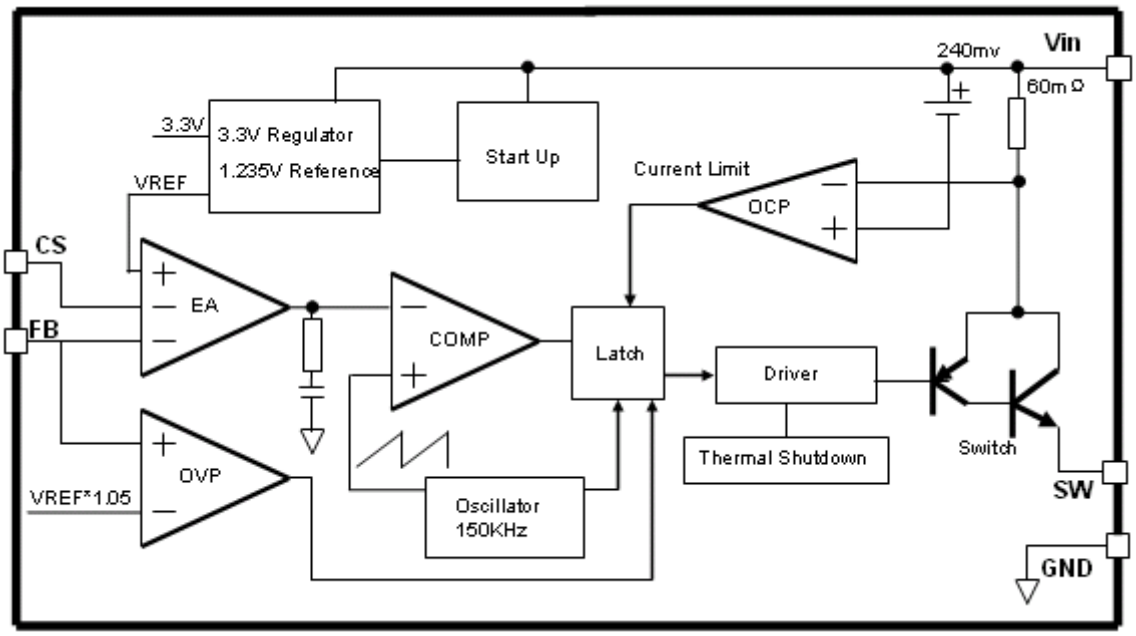

Figure3. Function Block Diagram of XL4101

Typical Application Circuit (Car Charger)

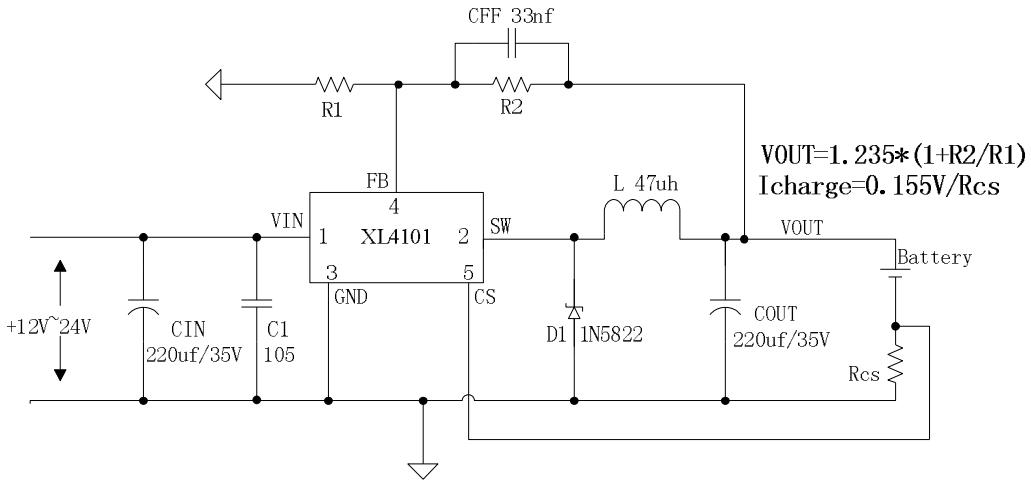

Figure4. XL4101 Typical Application Circuit (Li Battery Charger)

Typical Application Circuit (Buck LED Constant Current Driver)

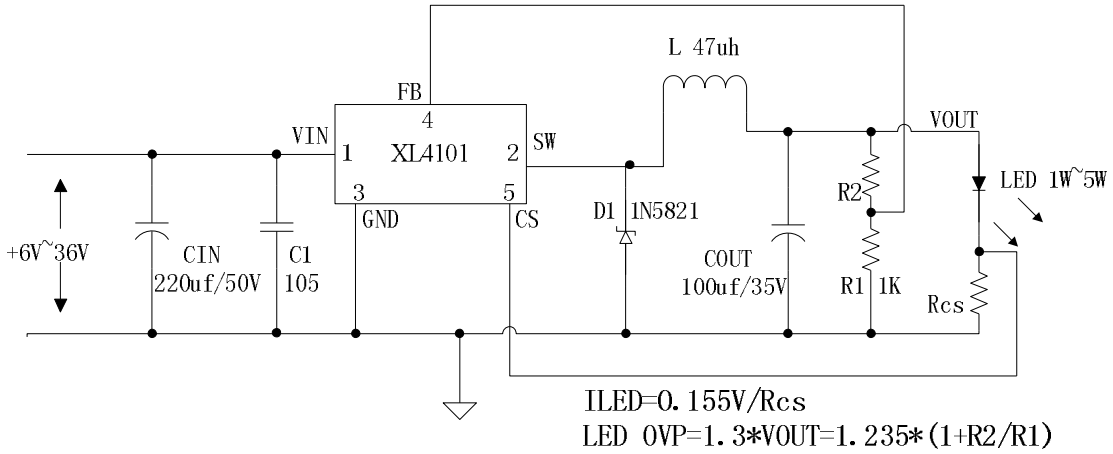

Figure5. XL4101 Typical Application Circuit (LED Constant Current Driver)

Ordering Information

Order Information	Marking ID	Package Type	Packing Type Supplied As
XL4101E1	XL4101E1	TO263-5L	800 Units on Tape & Reel

XLSEMI Pb-free products, as designated with "E1" suffix in the par number, are RoHS compliant.

Absolute Maximum Ratings（Note1）

Parameter	Symbol	Value	Unit
Input Voltage	Vin	-0.3 to 45	V
FB Pin Voltage	V_{FB}	-0.3 to Vin	V
SW Pin Voltage	V_{SW}	-0.3 to Vin	V
Power Dissipation	P_D	Internally limited	mW
Thermal Resistance (Junction to Ambient, No Heatsink, Free Air)	R_{JA}	30	ºC/W
Operating Junction Temperature	T_J	-40 to 125	ºC
Storage Temperature	T_{STG}	-65 to 150	ºC
Lead Temperature (Soldering, 10 sec)	T_{LEAD}	260	ºC
ESD (HBM)		2000	V

Note1: Stresses greater than those listed under Maximum Ratings may cause permanent damage to the device. This is a stress rating only and functional operation of the device at these or any other conditions above those indicated in the operation is not implied. Exposure to absolute maximum rating conditions for extended periods may affect reliability.

XL4101 Electrical Characteristics

T_a = 25℃;unless otherwise specified.

Symbol	Parameter	Test Condition	Min.	Typ.	Max.	Unit
System parameters test circuit figure4						
VFB	Feedback Voltage	Vin = 8V to 32V, Vout=5V Iload=0.2A to 3A	1.198	1.235	1.272	V
Efficiency	ŋ	Vin=12V ,Vout=5V Iout=3A	-	80	-	%

Electrical Characteristics (DC Parameters)

Vin = 12V, GND=0V, Vin & GND parallel connect a 220uf/50V capacitor; Iout=500mA, T_a = 25℃; the others floating unless otherwise specified.

Parameters	Symbol	Test Condition	Min.	Typ.	Max.	Unit
Input operation voltage	Vin		4.5		40	V
Quiescent Supply Current	I_q	V_{FB} =Vin		2	5	mA
Oscillator Frequency	Fosc		127	150	172	Khz
Switch Current Limit	I_L	V_{FB} =0		3.6		A
Output Saturation Voltage	V_{CE}	V_{FB}=0V I_{SW}=2A		1.1	1.4	V
Constant current sense Voltage	V_{CS}		0.140	0.155	0.170	V

Schottky Diode Selection Table

Current	Surface Mount	Through Hole	VR (The same as system maximum input voltage)				
			20V	30V	40V	50V	60V
1A		√	1N5817	1N5818	1N5819		
3A		√	1N5820	1N5821	1N5822		
		√	MBR320	MBR330	MBR340	MBR350	MBR360
	√		SK32	SK33	SK34	SK35	SK36
	√			30WQ03	30WQ04	30WQ05	
		√		31DQ03	31DQ04	31DQ05	
		√	SR302	SR303	SR304	SR305	SR306

Package Information

TO263-5L

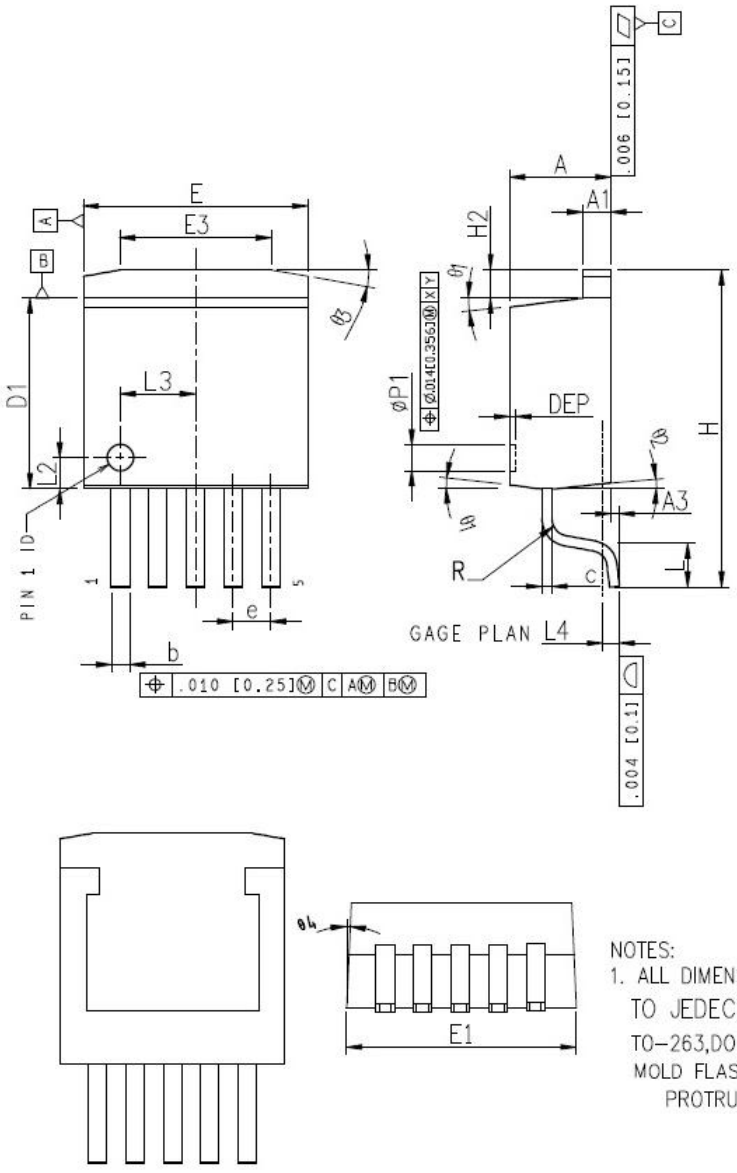

COMMON DIMENSIONS

SYMBOL	MM			INCH		
	MIN	NOM	MAX	MIN	NOM	MAX
A	4.45	4.57	4.70	0.175	0.180	0.185
A1	1.22	1.27	1.32	0.048	0.050	0.052
A3	0	–	0.15	0.000	–	0.006
b	0.71	–	0.97	0.028	–	0.038
c	0.38	–	0.76	0.015	–	0.030
D1	8.38	8.70	8.89	0.330	0.343	0.350
E	9.91	10.16	10.39	0.390	0.400	0.410
E1	10.03	10.16	10.54	0.395	0.400	0.415
E3	6.61	6.86	7.11	0.260	0.270	0.280
e	1.70BSC			0.067BSC		
H	–	–	14.35	–	–	0.565
H2	–	–	1.27	–	–	0.050
L	–	1.98	–	–	0.078	–
L2	1.47REF			0.058REF		
L3	3.40REF			0.134REF		
L4	–	0.76	–	–	0.030	–
φp1	1.07	1.20	1.32	0.042	0.047	0.052
R	–	–	0.76	–	–	0.030
θ1	–	7°	–	–	7°	–
θ2	–	3°	–	–	3°	–
θ3	7°	10°	13°	7°	10°	13°
θ4	–	3°	–	–	3°	–
DEP	0.10	0.18	0.25	0.004	0.007	0.010

NOTES:
1. ALL DIMENSIONS REFER TO JEDEC STANDARD TO-263,DO NOT INCLUDE MOLD FLASH OR PROTRUSIONS.

ENTEGRECİ

Bu belge www.entegreci.com üzerinden sunulmaktadır.

Elektronik komponent tedarikinde Entegreci

Entegreci, Eskişehir merkezli, Türkiye geneline satış yapan bir elektronik komponent mağazasıdır. Entegreler (IC), mikrodenetleyiciler, transistörler, diyotlar, pasif elemanlar, konnektörler, modüller ve geliştirme kartları tek adetten seri üretim adetlerine kadar satılır. Ürün sayfalarında güncel stok durumunu, fiyatı ve datasheet bağlantısını bulabilirsiniz.

Parça koduyla arama

Üretici parça numarasını yazın; stok ve fiyatı hemen görün.

www.entegreci.com

Ürün kategorileri

Entegreden kapasitöre tüm elektronik komponent kategorileri.

Kategorilere göz atın

Üreticiler

Aradığınız üreticinin ürünlerini tek sayfada inceleyin.

Üreticileri görün

Toplu alım ve teklif

Listede olmayan ya da yüksek adetli parçalar için teklif isteyin.

Teklif isteyin

www.entegreci.com | **destek@entegreci.com** | **0850 305 90 34**

Entegreci is an online electronic components store based in Türkiye. Search by manufacturer part number to see stock, prices and datasheets for integrated circuits, microcontrollers, transistors, passive components and connectors, or request a quote for parts that are not listed.

Bu sayfa Entegreci tarafından eklenmiştir. Belgenin önceki sayfaları asıl yayıncısına aittir ve içeriği değiştirilmemiştir; en güncel sürüm için belgenin yayıncısına başvurun.