3A 150KHz 40V Buck DC to DC Converter XL2596

Features

- Wide 4.5V to 40V Input Voltage Range
- 3.3V,5V,12V, and adjustable versions
- Output Adjustable from 1.23V to 37V
- Maximum Duty Cycle 100%
- Minimum Drop Out 1.5V
- Fixed 150KHz Switching Frequency
- 3A Constant Output Current Capability
- Internal Optimize Power Transistor
- High efficiency
- Excellent line and load regulation
- TTL shutdown capability
- ON/OFF pin with hysteresis function
- Built in thermal shutdown function
- Built in current limit function
- Built in second current limit function
- Available in TO-220,TO-263 packages

Applications

- LCD Monitor and LCD TV
- Digital Photo Frame
- Set-up Box
- ADSL Modem
- Telecom / Networking Equipment

General Description

The XL2596 is a 150 KHz fixed frequency PWM buck (step-down) DC/DC converter, capable of driving a 3A load with high efficiency, low ripple and excellent line and load regulation. Requiring a minimum number of external components, the regulator is simple to use and include internal frequency compensation and a fixed-frequency oscillator.

The PWM control circuit is able to adjust the duty ratio linearly from 0 to 100%. An enable function, an over current protection function is built inside. When second current limit function happens, the operation frequency will be reduced from 150KHz to 50KHz. An internal compensation block is built in to minimize external component count.

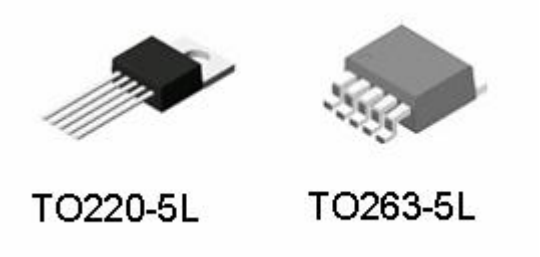

Figure1. Package Type of XL2596

Pin Configurations

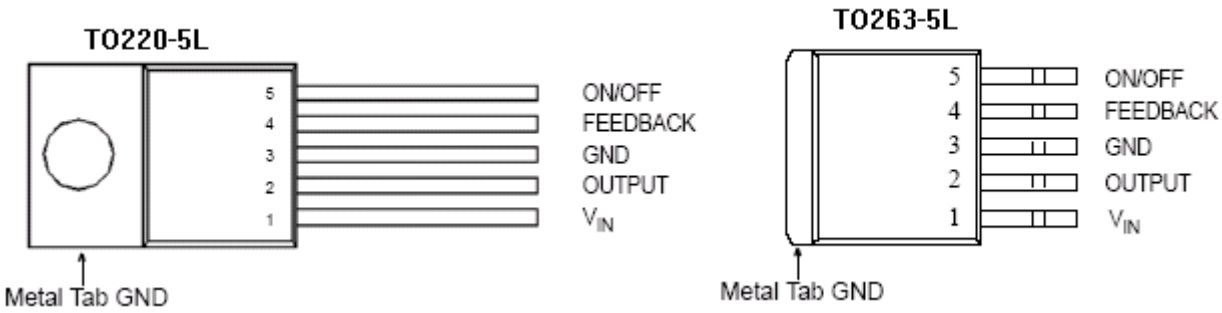

Figure2. Pin Configuration of XL2596 (Top View)

Table 1 Pin Description

Pin Number	Pin Name	Description
1	VIN	Supply Voltage Input Pin. XL2596 operates from a 4.5V to 40V DC voltage. Bypass Vin to GND with a suitably large capacitor to eliminate noise on the input.
2	OUTPUT	Power Switch Output Pin (SW). Output is the switch node that supplies power to the output.
3	GND	Ground Pin. Care must be taken in layout. This pin should be placed outside of the Schottky Diode to output capacitor ground path to prevent switching current spikes from inducing voltage noise into XL2596.
4	FEEDBACK	Feedback Pin (FB). Through an external resistor divider network, Feedback senses the output voltage and regulates it. The feedback threshold voltage is 1.23V.
5	ON/OFF	Enable Pin. Drive ON/OFF pin low to turn on the device, drive it high to turn it off. Floating is default low.

Function Block

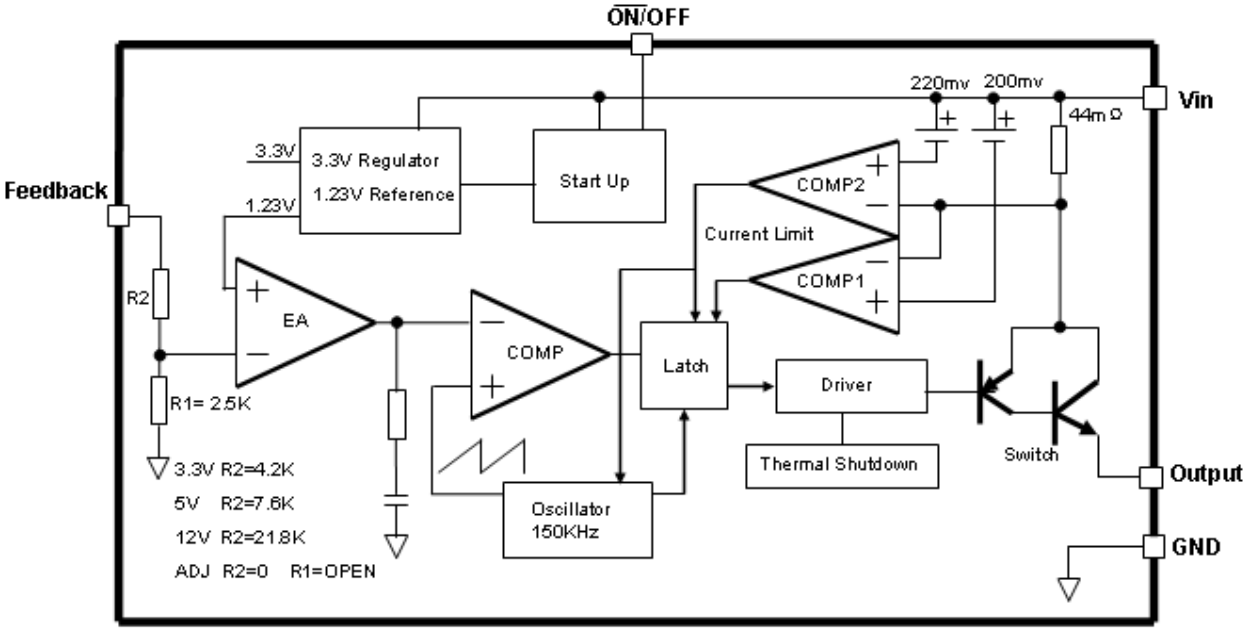

Figure3. Function Block Diagram of XL2596

Typical Application Circuit

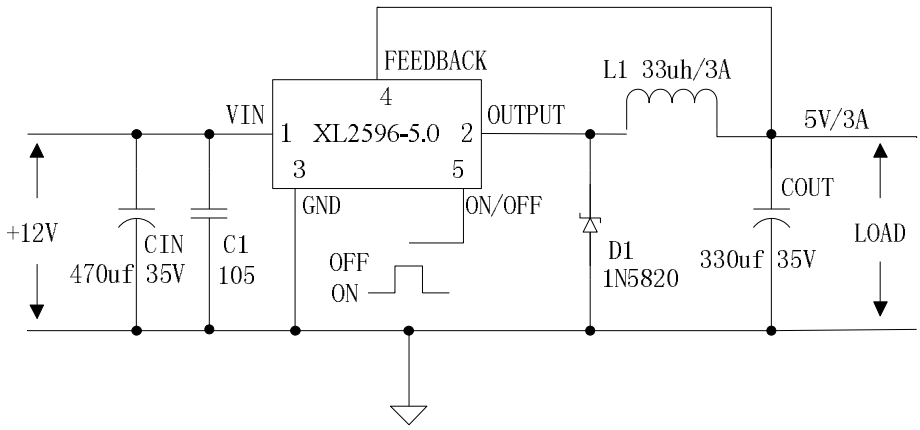

Figure4. XL2596 Typical Application Circuit 12V-5V/3A

Ordering Information

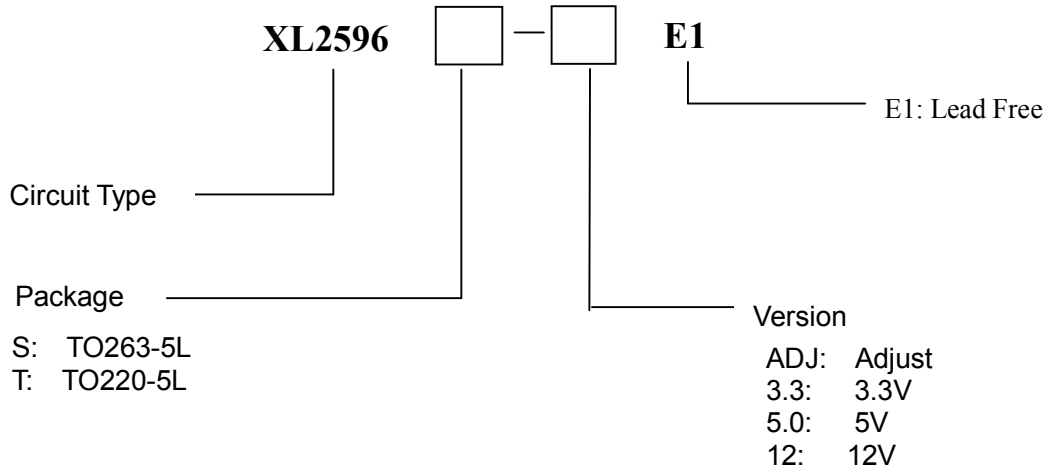

Package	Temperature Range	Marking ID Lead Free	Packing Type Supplied As
TO220-5L	-40°C ~ 85°C	XL2596T-ADJE1	Tube
		XL2596T-3.3E1	Tube
		XL2596T-5.0E1	Tube
		XL2596T-12E1	Tube
TO263-5L	-40°C ~ 85°C	XL2596S-ADJE1	800 Units on Tape & Reel
		XL2596S-3.3E1	800 Units on Tape & Reel
		XL2596S-5.0E1	800 Units on Tape & Reel
		XL2596S-12E1	800 Units on Tape & Reel

XLSEMI Pb-free products, as designated with "E1" suffix in the par number, are RoHS compliant.

Absolute Maximum Ratings（Note1）

Parameter	Symbol	Value	Unit
Input Voltage	Vin	-0.3 to 45	V
Feedback Pin Voltage	V_{FB}	-0.3 to Vin	V
ON/OFF Pin Voltage	$V_{ON/OFF}$	-0.3 to Vin	V
Output Switch Pin Voltage	V_{Output}	-0.3 to Vin	V
Power Dissipation	P_D	Internally limited	mW
Thermal Resistance (TO220 & TO263) (Junction to Ambient, No Heatsink, Free Air)	R_{JA}	30	ºC/W
Operating Junction Temperature	T_J	-40 to 125	ºC
Storage Temperature	T_{STG}	-65 to 150	ºC
Lead Temperature (Soldering, 10 sec)	T_{LEAD}	260	ºC
ESD (HBM)		2000	V

Note1: Stresses greater than those listed under Maximum Ratings may cause permanent damage to the device. This is a stress rating only and functional operation of the device at these or any other conditions above those indicated in the operation is not implied. Exposure to absolute maximum rating conditions for extended periods may affect reliability.

XL2596-3.3 Electrical Characteristics

T_a = 25℃;unless otherwise specified.

Symbol	Parameter	Test Condition	Min.	Typ.	Max.	Unit
System parameters test circuit figure6						
VOUT	Output Voltage	Vin = 4.75V to 40V Iload=0.2A to 3A	3.168	3.3	3.432	V
Efficiency	ŋ	Vin=12V ,Vout=3.3V Iout=3A	-	73	-	%

XL2596-5.0 Electrical Characteristics

T_a = 25℃;unless otherwise specified.

Symbol	Parameter	Test Condition	Min.	Typ.	Max.	Unit
System parameters test circuit figure7						
VOUT	Output Voltage	Vin = 7V to 40V Iload=0.2A to 3A	4.8	5	5.2	V
Efficiency	ŋ	Vin=12V ,Vout=5V Iout=3A	-	80	-	%

XL2596-12 Electrical Characteristics

T_a = 25℃;unless otherwise specified.

Symbol	Parameter	Test Condition	Min.	Typ.	Max.	Unit
System parameters test circuit figure8						
VOUT	Output Voltage	Vin = 15V to 40V Iload=0.2A to 3A	11.52	12	12.48	V
Efficiency	ŋ	Vin=25V ,Vout=12V Iout=3A	-	90	-	%

XL2596-ADJ Electrical Characteristics

T_a = 25℃;unless otherwise specified.

Symbol	Parameter	Test Condition	Min.	Typ.	Max.	Unit
System parameters test circuit figure9						
VOUT	Output Voltage	Vin = 4.5V to 40V Iload=0.2A to 3A	1.193	1.23	1.267	V
Efficiency	ŋ	Vin=12V ,Vout=3V Iout=3A	-	73	-	%

Electrical Characteristics (DC Parameters)

Vin = 12V for the 3.3V,5V,and Adjustable versions and Vin=24V for the 12V version, GND=0V, Vin & GND parallel connect a 220uf/50V capacitor; Iout=500mA, T_a = 25℃; the others floating unless otherwise specified.

Parameters	Symbol	Test Condition	Min.	Typ.	Max.	Unit
Input operation voltage	Vin		4.5		40	V
Shutdown Supply Current	I_{STBY}	$V_{ON/OFF}$=5V		80	200	uA
Quiescent Supply Current	I_q	$V_{ON/OFF}$ =0V, V_{FB} =Vin		2	10	mA
Oscillator Frequency	Fosc		127	150	173	Khz
Switch Current Limit	I_L	V_{FB} =0	3.6	4.8	6.9	A
ON/OFF Pin Threshold	$V_{ON/OFF}$	High (Regulator OFF) Low (Regulator ON)		1.4 0.8		V
ON/OFF Pin Input Leakage Current	I_H	$V_{ON/OFF}$ =2.5V (OFF)		5	15	uA
	I_L	$V_{ON/OFF}$ =0.5V (ON)		0.2	5	uA
Output Saturation Voltage	V_{CE}	V_{FB}=0V I_{out}=3A		1.3	1.5	V
Max. Duty Cycle	D_{MAX}	V_{FB}=0V		100		%

Test Circuit and Layout guidelines

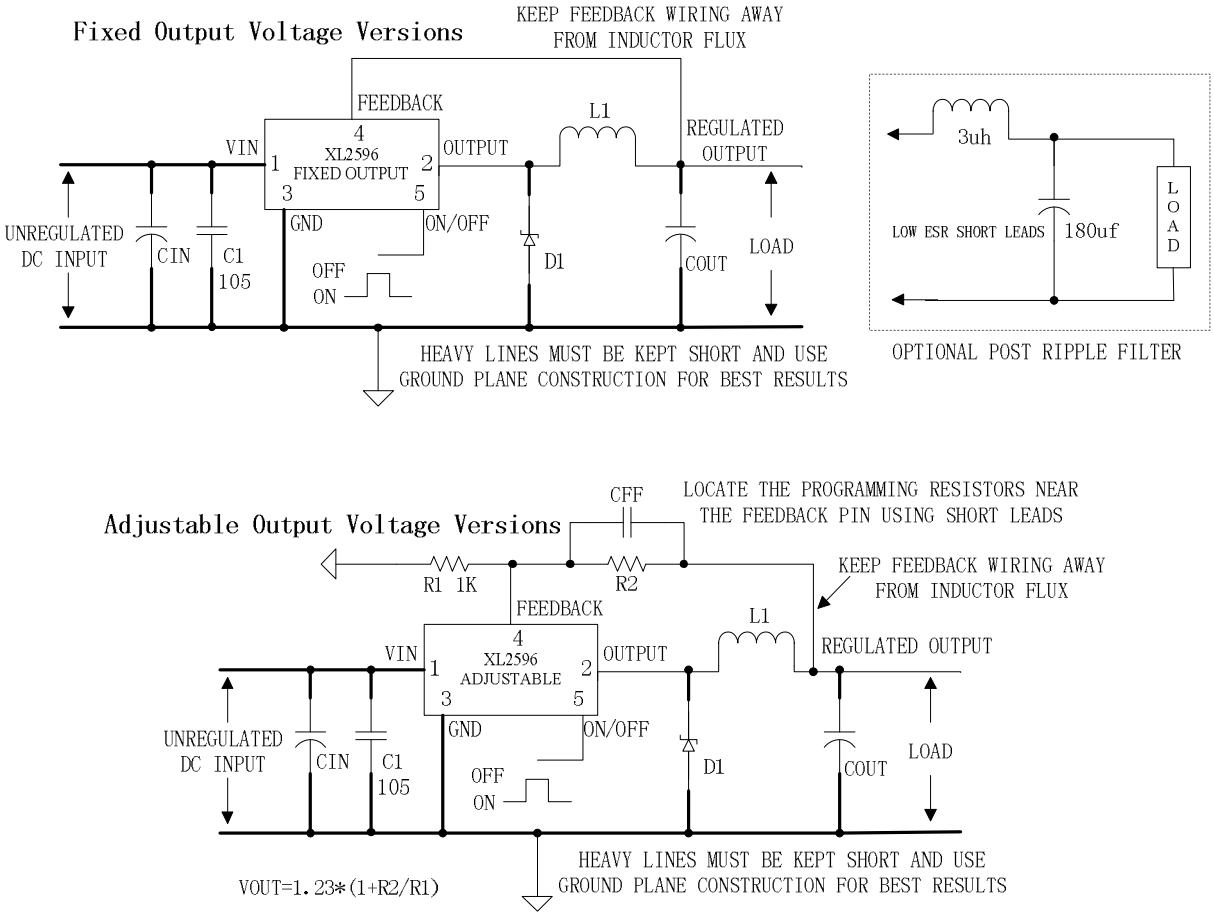

Figure5. Standard Test Circuits and Layout Guides

Select R1 to be approximately 1K, use a 1% resistor for best stability.

C1 and CFF are optional; in order to increase stability and reduce the input power line noise, CIN and C1 must be placed near to PIN1 and PIN3;

For output voltages greater than approximately 10V, an additional capacitor CFF is required. The compensation capacitor is typically between 100 pf and 33 nf, and is wired in parallel with the output voltage setting resistor, R2. It provides additional stability for high output voltage, low input-output voltages, and/or very low ESR output capacitors, such as solid tantalum capacitors.

CFF=1/(31*1000*R2); This capacitor type can be ceramic, plastic, silver mica, etc. (Because of the unstable characteristics of ceramic capacitors made with Z5U material, they are not recommended.)

XL2596 Series Buck Regulator Design Procedure (Fixed Output)

Conditions			Inductor (L1)	Output Capacitor (COUT)			
				Through Hole Electrolytic		Surface Mount Tantalum	
Output Voltage (V)	Load Current (A)	Max Input Voltage (V)	Inductance (uh)	Panasonic HFQ Series (uf/V)	Nichicon PL Series (uf/V)	AVX TPS Series (uf/V)	Sprague 595D Series (uf/V)
3.3	3	5	22	470/25	560/16	330/6.3	390/6.3
		7	22	560/35	560/35	330/6.3	390/6.3
		10	22	680/35	680/35	330/6.3	390/6.3
		40	33	560/35	470/35	330/6.3	390/6.3
	2	6	22	470/25	470/35	330/6.3	390/6.3
		10	33	330/35	330/35	330/6.3	390/6.3
		40	47	330/35	270/50	220/10	330/10
5	3	8	22	470/25	560/16	220/10	330/10
		10	22	560/25	560/25	220/10	330/10
		15	33	330/35	330/35	220/10	330/10
		40	47	330/35	270/35	220/10	330/10
	2	9	22	470/25	560/16	220/10	330/10
		20	68	180/35	180/35	100/10	270/10
		40	68	180/35	180/35	100/10	270/10
12	3	15	22	470/25	470/25	100/16	180/16
		18	33	330/25	330/25	100/16	180/16
		30	68	180/25	180/25	100/16	120/20
		40	68	180/35	180/25	100/16	120/20
	2	15	33	330/25	330/25	100/16	180/16
		20	68	180/25	180/25	100/16	120/20
		40	150	82/25	82/25	68/20	68/25

XL2596 Series Buck Regulator Design Procedure (Adjustable Output)

Output Voltage (V)	Through Hole Output Electrolytic			Surface Mount Output Capacitor		
	Panasonic HFQ Series (uf/V)	Nichicon PL Series (uf/V)	Feedforward Capacitor	AVX TPS Series (uf/V)	Sprague 595D Series (uf/V)	Feedforward Capacitor
2	820/35	820/35	33nf	330/6.3	470/4	33nf
4	560/35	470/35	10nf	330/6.3	390/6.3	10nf
6	470/25	470/35	3.3nf	220/10	330/10	3.3nf
9	330/25	330/25	1.5nf	100/16	180/16	1.5nf
12	330/25	330/25	1nf	100/16	180/16	1nf
15	220/25	220/35	680pf	68/20	120/20	680pf
24	220/35	150/35	560pf	33/25	33/25	220pf
28	100/50	100/50	390pf	10/35	15/50	220pf

Schottky Diode Selection Table

Current	Surface Mount	Through Hole	VR (The same as system maximum input voltage)				
			20V	30V	40V	50V	60V
1A		√	1N5817	1N5818	1N5819		
3A		√	1N5820	1N5821	1N5822		
		√	MBR320	MBR330	MBR340	MBR350	MBR360
	√		SK32	SK33	SK34	SK35	SK36
	√			30WQ03	30WQ04	30WQ05	
		√		31DQ03	31DQ04	31DQ05	
		√	SR302	SR303	SR304	SR305	SR306
5A		√	1N5823	1N5824	1N5825		
		√	SR502	SR503	SR504	SR505	SR506
		√	SB520	SB530	SB540	SB550	SB560
	√			50WQ03	50WQ04	50WQ05	

Typical System Application for 3.3V Version

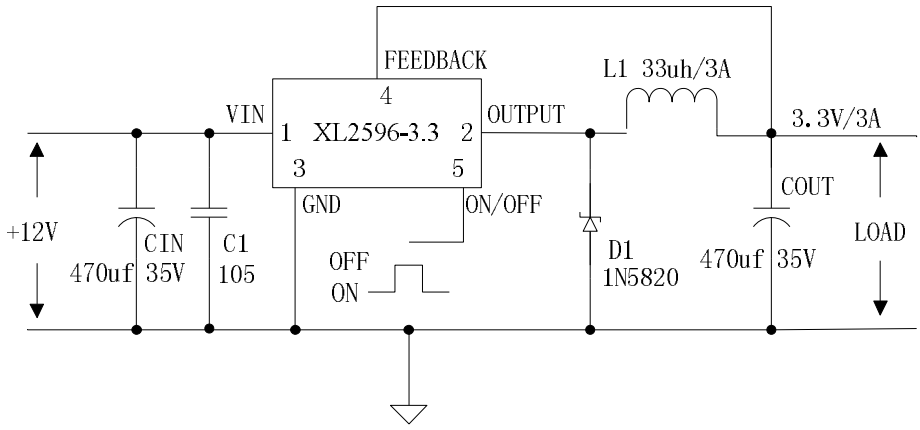

Figure6. XL2596-3.3 System Parameters Test Circuit

Typical System Application for 5V Version

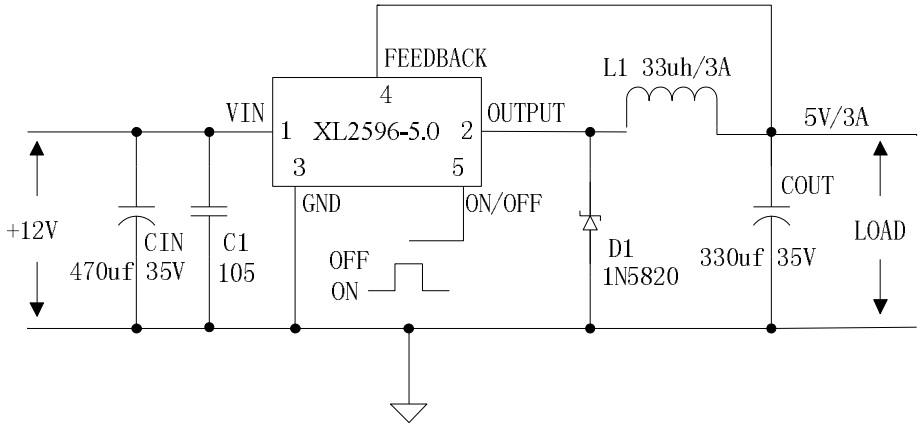

Figure7. XL2596-5.0 System Parameters Test Circuit

Typical System Application for 12V Version

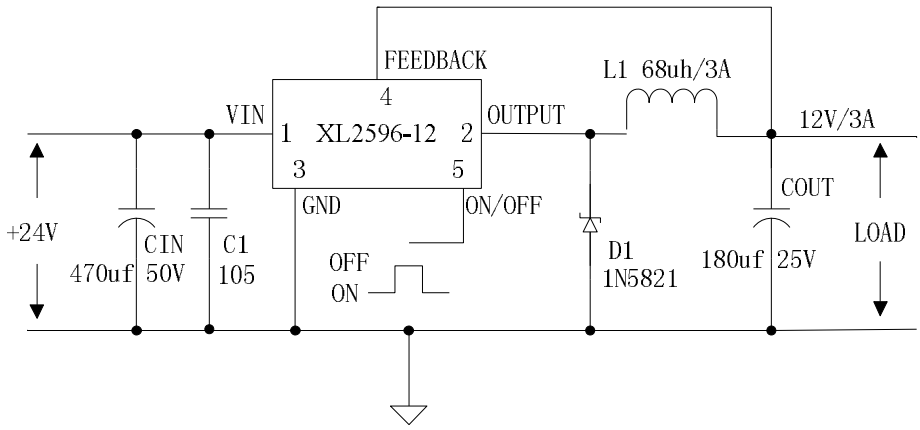

Figure8. XL2596-12 System Parameters Test Circuit

Typical System Application for ADJ Version

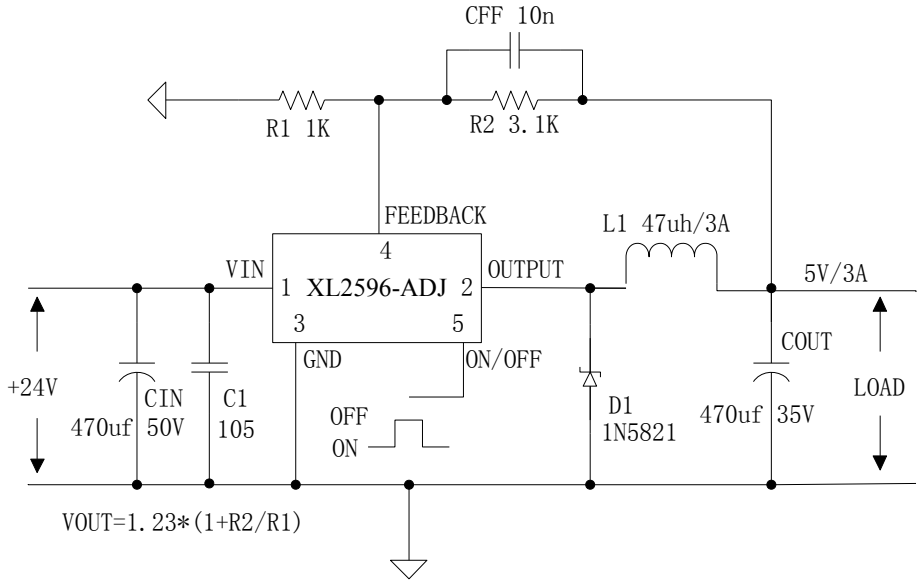

Figure9. XL2596-ADJ System Parameters Test Circuit

Package Information

(1) TO220-5L

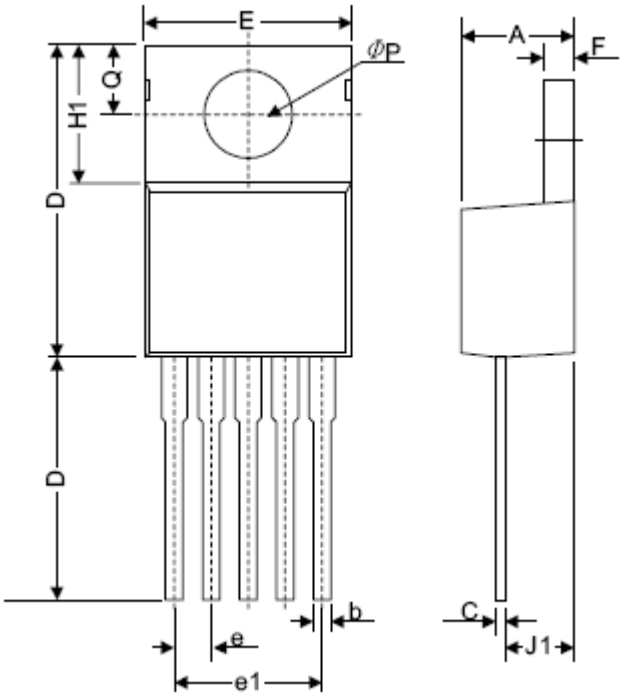

Symbol	Dimensions In Millimeters		Dimensions In Inches	
	Min.	Max.	Min.	Max.
A	4.06	4.83	0.160	0.190
b	0.76	1.02	0.030	0.040
C	0.36	0.64	0.014	0.025
D	14.22	15.49	0.560	0.610
E	9.78	10.54	0.385	0.415
e	1.57	1.85	0.062	0.073
e(1)	6.68	6.93	0.263	0.273
F	1.14	1.40	0.045	0.055
H(1)	5.46	6.86	0.215	0.270
J(1)	2.29	3.18	0.090	0.125
L	13.21	14.73	0.520	0.580
ΦP	3.68	3.94	0.145	0.155
Q	2.54	2.92	0.100	0.115

Package Information

(2) TO263-5L

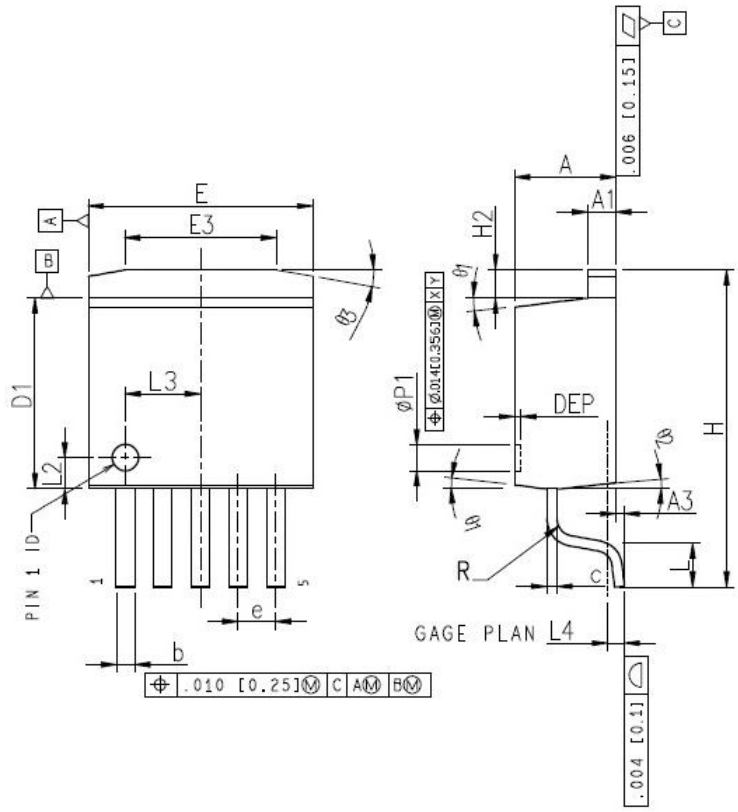

COMMON DIMENSIONS

SYMBOL	MM			INCH		
	MIN	NOM	MAX	MIN	NOM	MAX
A	4.45	4.57	4.70	0.175	0.180	0.185
A1	1.22	1.27	1.32	0.048	0.050	0.052
A3	0	–	0.15	0.000	–	0.006
b	0.71	–	0.97	0.028	–	0.038
c	0.38	–	0.76	0.015	–	0.030
D1	8.38	8.70	8.89	0.330	0.343	0.350
E	9.91	10.16	10.39	0.390	0.400	0.410
E1	10.03	10.16	10.54	0.395	0.400	0.415
E3	6.61	6.86	7.11	0.260	0.270	0.280
e	1.70BSC			0.067BSC		
H	–	–	14.35	–	–	0.565
H2	–	–	1.27	–	–	0.050
L	–	1.98	–	–	0.078	–
L2	1.47REF			0.058REF		
L3	3.40REF			0.134REF		
L4	–	0.76	–	–	0.030	–
Øp1	1.07	1.20	1.32	0.042	0.047	0.052
R	–	–	0.76	–	–	0.030
θ1	–	7°	–	–	7°	–
θ2	–	3°	–	–	3°	–
θ3	7°	10°	13°	7°	10°	13°
θ4	–	3°	–	–	3°	–
DEP	0.10	0.18	0.25	0.004	0.007	0.010

NOTES:
1. ALL DIMENSIONS REFER TO JEDEC STANDARD TO-263,DO NOT INCLUDE MOLD FLASH OR PROTRUSIONS.

ENTEGRECİ

Bu belge www.entegreci.com üzerinden sunulmaktadır.

Elektronik komponent tedarikinde Entegreci

Entegreci, Eskişehir merkezli, Türkiye geneline satış yapan bir elektronik komponent mağazasıdır. Entegreler (IC), mikrodenetleyiciler, transistörler, diyotlar, pasif elemanlar, konnektörler, modüller ve geliştirme kartları tek adetten seri üretim adetlerine kadar satılır. Ürün sayfalarında güncel stok durumunu, fiyatı ve datasheet bağlantısını bulabilirsiniz.

Parça koduyla arama

Üretici parça numarasını yazın; stok ve fiyatı hemen görün.

www.entegreci.com

Ürün kategorileri

Entegreden kapasitöre tüm elektronik komponent kategorileri.

Kategorilere göz atın

Üreticiler

Aradığınız üreticinin ürünlerini tek sayfada inceleyin.

Üreticileri görün

Toplu alım ve teklif

Listede olmayan ya da yüksek adetli parçalar için teklif isteyin.

Teklif isteyin

www.entegreci.com | **destek@entegreci.com** | **0850 305 90 34**

Entegreci is an online electronic components store based in Türkiye. Search by manufacturer part number to see stock, prices and datasheets for integrated circuits, microcontrollers, transistors, passive components and connectors, or request a quote for parts that are not listed.

Bu sayfa Entegreci tarafından eklenmiştir. Belgenin önceki sayfaları asıl yayıncısına aittir ve içeriği değiştirilmemiştir; en güncel sürüm için belgenin yayıncısına başvurun.