FAIRCHILD SEMICONDUCTOR®

May 2007

74VHC123A
Dual Retriggerable Monostable Multivibrator

Features

- High Speed: t_{PD} = 8.1ns (Typ.) at T_A = 25°C
- Low Power Dissipation: I_{CC} = 4µA (Max) at T_A = 25°C
- Active State: I_{CC} = 600µA (Max.) at T_A = 25°C
- High Noise Immunity: $V_{NIH} = V_{NIL}$ = 28% V_{CC} (Min.)
- Power down protection is provided on all inputs
- Pin and function compatible with 74HC123A

General Description

The VHC123A is an advanced high speed CMOS Monostable Multivibrator fabricated with silicon gate CMOS technology. It achieves the high speed operation similar to equivalent Bipolar Schottky TTL while maintaining the CMOS low power dissipation. Each multivibrator features both a negative, A, and a positive, B, transition triggered input, either of which can be used as an inhibit input. Also included is a clear input that when taken low resets the one-shot. The VHC123A can be triggered on the positive transition of the clear while A is held low and B is held high. The output pulse width is determined by the equation: PW = $(R_x)(C_x)$; where PW is in seconds, R is in ohms, and C is in farads.

Limits for R_x and C_x are:

External capacitor, C_x: No limit

External resistors, R_x: V_{CC} = 2.0V, 5 kΩ min
V_{CC} > 3.0V, 1 kΩ min

An input protection circuit ensures that 0 to 7V can be applied to the input pins without regard to the supply voltage. This device can be used to interface 5V to 3V systems and two supply systems such as battery back up. This circuit prevents device destruction due to mismatched supply and input voltages.

Ordering Information

Order Number	Package Number	Package Description
74VHC123AM	M16A	16-Lead Small Outline Integrated Circuit (SOIC), JEDEC MS-012, 0.150” Narrow
74VHC123ASJ	M16D	16-Lead Small Outline Package (SOP), EIAJ TYPE II, 5.3mm Wide
74VHC123AMTC	MTC16	16-Lead Thin Shrink Small Outline Package (TSSOP), JEDEC MO-153, 4.4mm Wide

Surface mount packages are also available on Tape and Reel. Specify by appending the suffix letter “X” to the ordering number.

©1993 Fairchild Semiconductor Corporation

Connection Diagram

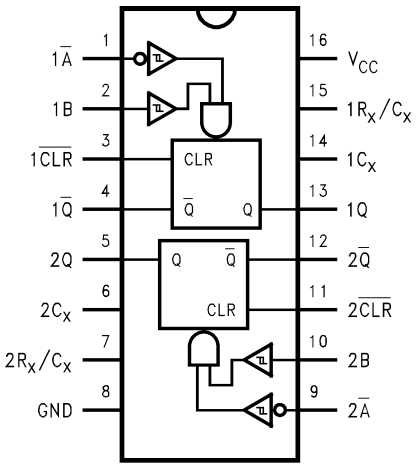

Logic Symbol

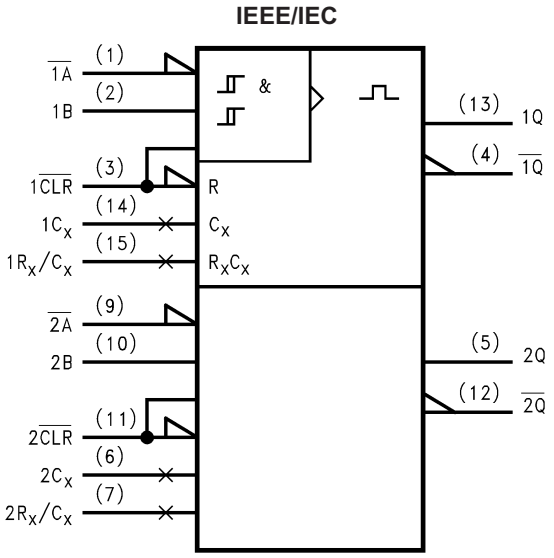

Pin Description

Pin Names	Description
A	Trigger Inputs (Negative Edge)
B	Trigger Inputs (Positive Edge)
CLR	Reset Inputs
C_x	External Capacitor
R_x	External Resistor
Q, $\overline{Q}$	Outputs

Truth Table

Inputs			Outputs		
$\overline{A}$	B	$\overline{CLR}$	Q	$\overline{Q}$	Function
↘	H	H	⎍	⎎	Output Enable
X	L	H	L	H	Inhibit
H	X	H	L	H	Inhibit
L	↗	H	⎍	⎎	Output Enable
L	H	↗	⎍	⎎	Output Enable
X	X	L	L	H	Reset

H = HIGH Voltage Level

L = LOW Voltage Level

↘ = HIGH-to-LOW Transition

↗ = LOW-to-HIGH Transition

X = Don't Care

©1993 Fairchild Semiconductor Corporation

Block Diagrams

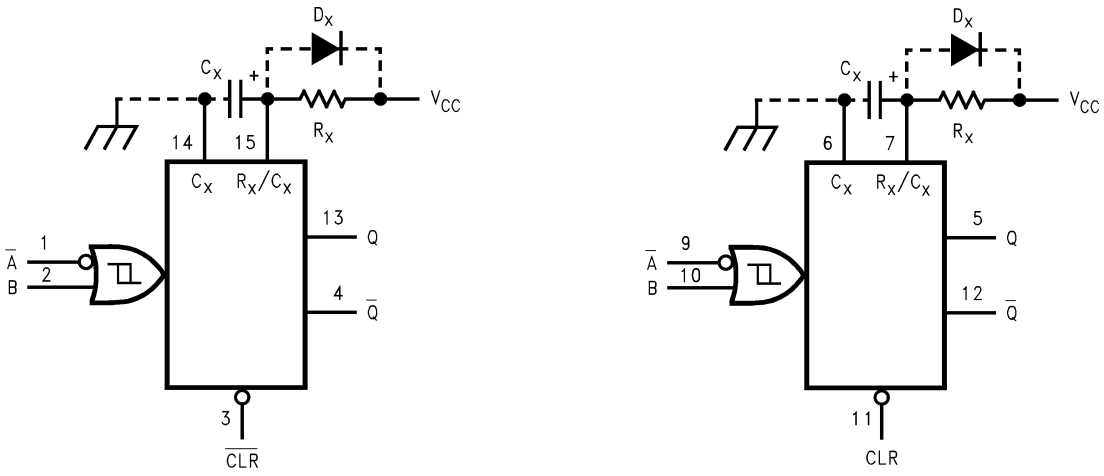

Note A: C_x, R_x, D_x are external Capacitor, Resistor, and Diode, respectively.

Note B: External clamping diode, D_x;

External capacitor is charged to V_{CC} level in the wait state, i.e. when no trigger is applied.

If the supply voltage is turned off, C_x discharges mainly through the internal (parasitic) diode. If C_x is sufficiently large and V_{CC} drops rapidly, there will be some possibility of damaging the IC through in rush current or latch-up. If the capacitance of the supply voltage filter is large enough and V_{CC} drops slowly, the in rush current is automatically limited and damage to the IC is avoided.

The maximum value of forward current through the parasitic diode is ±20mA. In the case of a large Cx, the limit of fall time of the supply voltage is determined as follows:

$t_f \geq (V_{CC} - 0.7)\ C_x / 20mA$

(t_f is the time between the supply voltage turn off and the supply voltage reaching 0.4 V_{CC})

In the event a system does not satisfy the above condition, an external clamping diode (D_x) is needed to protect the IC from rush current.

©1993 Fairchild Semiconductor Corporation

System Diagram

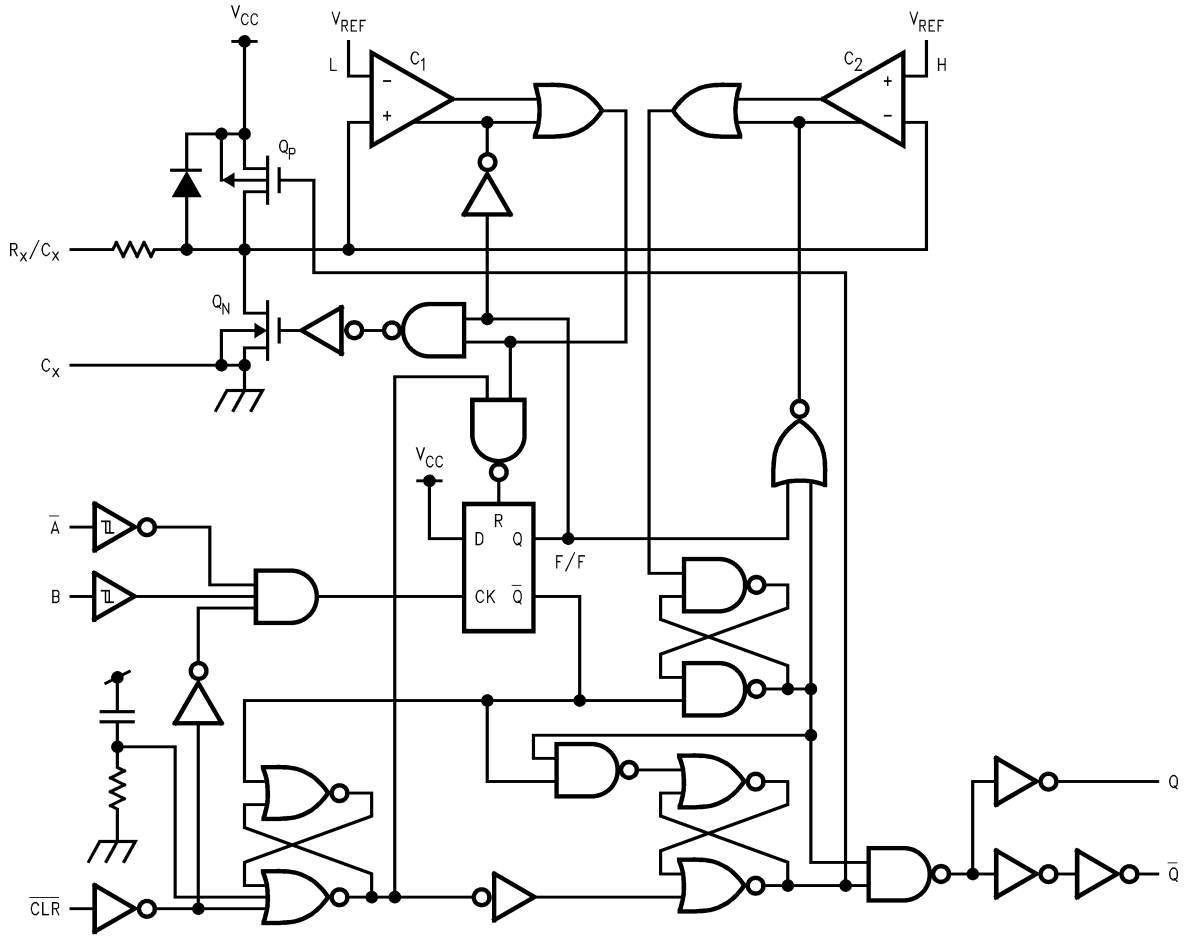

Timing Chart

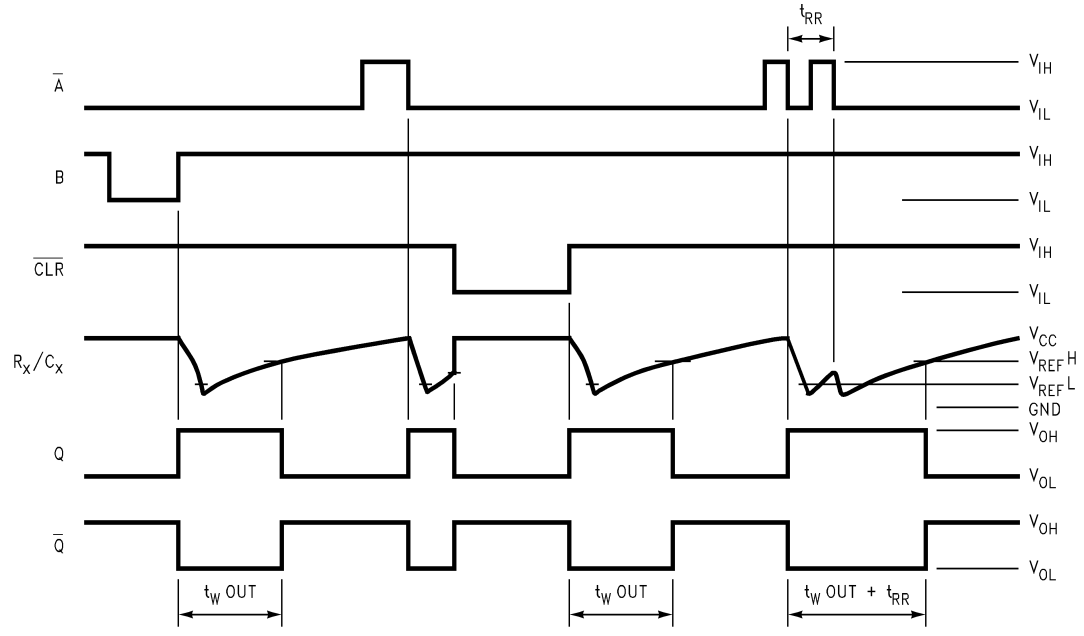

Functional Description

1. Stand-by State

   The external capacitor (C_x) is fully charged to V_{CC} in the Stand-by State. That means, before triggering, the Q_P and Q_N transistors which are connected to the R_x/C_x node are in the off state. Two comparators that relate to the timing of the output pulse, and two reference voltage supplies turn off. The total supply current is only leakage current.

2. Trigger Operation

   Trigger operation is effective in any of the following three cases. First, the condition where the $\overline{A}$ input is LOW, and B input has a rising signal; second, where the B input is HIGH, and the A input has a falling signal; and third, where the $\overline{A}$ input is LOW and the B input is HIGH, and the $\overline{CLR}$ input has a rising signal.

   After a trigger becomes effective, comparators C_1 and C_2 start operating, and Q_N is turned on. The external capacitor discharges through Q_N. The voltage level at the R_x/C_x node drops. If the R_x/C_x voltage level falls to the internal reference voltage $V_{ref}L$, the output of C_1 becomes LOW. The flip-flop is then reset and Q_N turns off. At that moment C_1 stops but C_2 continues operating.

   After Q_N turns off, the voltage at the R_x/C_x node starts rising at a rate determined by the time constant of external capacitor C_x and resistor R_x.

   Upon triggering, output Q becomes HIGH, following some delay time of the internal F/F and gates. It stays HIGH even if the voltage of R_x/C_x changes from falling to rising. When R_x/C_x reaches the internal reference voltage $V_{ref}H$, the output of C_2 becomes LOW, the output Q goes LOW and C_2 stops its operation. That means, after triggering, when the voltage level of the R_x/C_x node reaches $V_{ref}H$, the IC returns to its MONOSTABLE state.

   With large values of C_x and R_x, and ignoring the discharge time of the capacitor and internal delays of the IC, the width of the output pulse, t_W (OUT), is as follows:

   t_W (OUT) = 1.0 C_x R_x

3. Retrigger operation (74VHC123A)

   When a new trigger is applied to either input $\overline{A}$ or B while in the MONOSTABLE state, it is effective only if the IC is charging C_x. The voltage level of the R_x/C_x node then falls to $V_{ref}L$ level again. Therefore the Q output stays HIGH if the next trigger comes in before the time period set by C_x and R_x.

   If the new trigger is very close to a previous trigger, such as an occurrence during the discharge cycle, it will have no effect.

   The minimum time for a trigger to be effective 2nd trigger, t_{RR} (Min), depends on V_{CC} and C_x.

4. Reset Operation

   In normal operation, the $\overline{CLR}$ input is held HIGH. If $\overline{CLR}$ is LOW, a trigger has no affect because the Q output is held LOW and the trigger control F/F is reset. Also, Q_p turns on and C_x is charged rapidly to V_{CC}.

   This means if $\overline{CLR}$ is set LOW, the IC goes into a wait state.

©1993 Fairchild Semiconductor Corporation

Absolute Maximum Ratings

Stresses exceeding the absolute maximum ratings may damage the device. The device may not function or be operable above the recommended operating conditions and stressing the parts to these levels is not recommended. In addition, extended exposure to stresses above the recommended operating conditions may affect device reliability. The absolute maximum ratings are stress ratings only.

Symbol	Parameter	Rating
V_{CC}	Supply Voltage	–0.5V to +7.0V
V_{IN}	DC Input Voltage	–0.5V to +7.0V
V_{OUT}	DC Output Voltage	–0.5V to V_{CC} + 0.5V
I_{IK}	Input Diode Current	–20mA
I_{OK}	Output Diode Current	±20mA
I_{OUT}	DC Output Current	±25mA
I_{CC}	DC V_{CC} / GND Current	±50mA
T_{STG}	Storage Temperature	–65°C to +150°C
T_L	Lead Temperature (Soldering, 10 seconds)	260°C

Recommended Operating Conditions(1)

The Recommended Operating Conditions table defines the conditions for actual device operation. Recommended operating conditions are specified to ensure optimal performance to the datasheet specifications. Fairchild does not recommend exceeding them or designing to absolute maximum ratings.

Symbol	Parameter	Rating
V_{CC}	Supply Voltage	2.0V to +5.5V
V_{IN}	Input Voltage	0V to +5.5V
V_{OUT}	Output Voltage	0V to V_{CC}
T_{OPR}	Operating Temperature	–40°C to +85°C
t_r, t_f	Input Rise and Fall Time ($\overline{CLR}$ only)	
	V_{CC} = 3.3V ± 0.3V	0ns/V ~ 100ns/V
	V_{CC} = 5.0V ± 0.5V	0ns/V ~ 20ns/V
	External Capacitor, C_x	No Limitation(2) F
	External Resistor, R_x	>5kΩ(2) (V_{CC} = 2.0V)
		>1kΩ(2) (V_{CC} > 3.0V)

Notes:

1. Unused inputs must be held HIGH or LOW. They may not float.
2. The maximum allowable values of C_x and R_x are a function of the leakage of capacitor C_x, the leakage of the device, and leakage due to board layout and surface resistance. Susceptibility to externally induced noise signals may occur for R_x > 1MΩ.

©1993 Fairchild Semiconductor Corporation

DC Electrical Characteristics

Symbol	Parameter	V_{CC} (V)	Conditions		T_A = 25°C			T_A = –40° to 85°C		Units
					Min.	Typ.	Max.	Min.	Max.	
V_{IH}	HIGH Level Input Voltage	2.0			1.50			1.50		V
		3.0–5.5			0.7 x V_{CC}			0.7 x V_{CC}		
V_{IL}	LOW Level Input Voltage	2.0					0.50		0.50	V
		3.0–5.5					0.3 x V_{CC}		0.3 x V_{CC}	
V_{OH}	HIGH Level Output Voltage	2.0	V_{IN} = V_{IH} or V_{IL}	I_{OH} = –50µA	1.9	2.0		1.9		V
		3.0			2.9	3.0		2.9		
		4.5			4.4	4.5		4.4		
		3.0		I_{OH} = –4mA	2.58			2.48		
		4.5		I_{OH} = –8mA	3.94			3.80		
V_{OL}	LOW Level Output Voltage	2.0	V_{IN} = V_{IH} or V_{IL}	I_{OL} = 50µA		0.0	0.1		0.1	V
		3.0				0.0	0.1		0.1	
		4.5				0.0	0.1		0.1	
		3.0		I_{OL} = 4mA			0.36		0.44	
		4.5		I_{OL} = 8mA			0.36		0.44	
I_{IN}	Input Leakage Current	0–5.5	V_{IN} = 5.5V or GND				±0.1		±1.0	µA
I_{IN}	R_x/C_x Terminal Off-State Current	5.5	V_{IN} = V_{CC} or GND				±0.25		±2.50	µA
I_{CC}	Quiescent Supply Current	5.5	V_{IN} = V_{CC} or GND				4.0		40.0	µA
I_{CC}	Active—State[3] Supply Current	3.0	V_{IN} = V_{CC} or GND, R_x/C_x = 0.5 V_{CC}			160	250		280	µA
		4.5				380	500		650	
		5.5				560	750		975	

Note:

3. Per circuit.

©1993 Fairchild Semiconductor Corporation

AC Electrical Characteristics[4]

Symbol	Parameter	V_{CC} (V)	Conditions	T_A = 25°C			T_A = –40°C to +85°C		Units
				Min.	Typ.	Max.	Min.	Max.	
t_{PLH}, t_{PHL}	Propagation Delay Time (A, B–Q, $\overline{Q}$)	3.3 ± 0.3	C_L = 15 pF		13.4	20.6	1.0	24.0	ns
			C_L = 50 pF		15.9	24.1	1.0	27.5	
		5.0 ± 0.5	C_L = 15 pF		8.1	12.0	1.0	14.0	ns
			C_L = 50 pF		9.6	14.0	1.0	16.0	
t_{PLH}, t_{PHL}	Propagation Delay Time ($\overline{CLR}$ Trigger—Q, $\overline{Q}$)	3.3 ± 0.3	C_L = 15 pF		14.5	22.4	1.0	26.0	ns
			C_L = 50 pF		17.0	25.9	1.0	29.5	
		5.0 ± 0.5	C_L = 15 pF		8.7	12.9	1.0	15.0	ns
			C_L = 50 pF		10.2	14.9	1.0	17.0	
t_{PLH}, t_{PHL}	Propagation Delay Time ($\overline{CLR}$—Q, $\overline{Q}$)	3.3 ± 0.3	C_L = 15 pF		10.3	15.8	1.0	18.5	ns
			C_L = 50 pF		12.8	19.3	1.0	22.0	
		5.0 ± 0.5	C_L = 15 pF		6.3	9.4	1.0	11.0	ns
			C_L = 50 pF		7.8	11.4	1.0	13.0	
t_{WOUT}	Output Pulse Width	3.3 ± 0.3	C_L = 50pF, C_x = 28pF, R_x = 2kΩ		160	240		300	ns
		5.0 ± 0.5			133	200		240	
		3.3 ± 0.3	C_L = 50pF, C_x = 0.01μF, R_x = 10kΩ	90	100	110	90	110	μs
		5.0 ± 0.5		90	100	110	90	110	
		3.3 ± 0.3	C_L = 50pF, C_x = 0.1μF, R_x = 1kΩ	0.9	1.0	1.1	0.9	1.1	ms
		5.0 ± 0.5		0.9	1.0	1.1	0.9	1.1	
Δt_{WOUT}	Output Pulse Width Error Between Circuits (In same Package)				±1				%
C_{IN}	Input Capacitance		V_{CC} = Open		4	10		10	pF
C_{PD}	Power Dissipation Capacitance		[5]		73				pF

Notes:

4. Refer to Timing Chart.

5. C_{PD} is defined as the value of the internal equivalent capacitance which is calculated from the operating current consumption without load. Average operating current can be obtained by the equation:

   I_{CC} (opr.) = C_{PD} • V_{CC} • f_{IN+} $I_{CC}{}^1$ • Duty / 100 + I_{CC} / 2 (per Circuit)

   $I_{CC}{}^1$: Active Supply Current

   Duty: %

©1993 Fairchild Semiconductor Corporation

AC Operating Requirement[6]

Symbol	Parameter	V_{CC} (V)	Conditions	T_A = 25°C			T_A = –40°C to +85°C		Units
				Min.	Typ.	Max.	Min.	Max.	
$t_W(L)$, $t_W(H)$	Minimum Trigger Pulse Width	3.3		5.0			5.0		ns
		5.0		5.0			5.0		
$t_W(L)$	Minimum Clear Pulse Width	3.3		5.0			5.0		ns
		5.0		5.0			5.0		
t_{RR}	Minimum Retrigger Time	3.3 ± 0.3	R_x = 1kΩ, C_X = 100pF		60				ns
		5.0 ± 0.5			39				
		3.3	R_x = 1kΩ, C_X = 0.01μF		1.5				μs
		5.0			1.2				

Note:

6. Refer to Timing Chart.

Device Characteristics

t_{wout}*C_x Characteristics (Typ.)

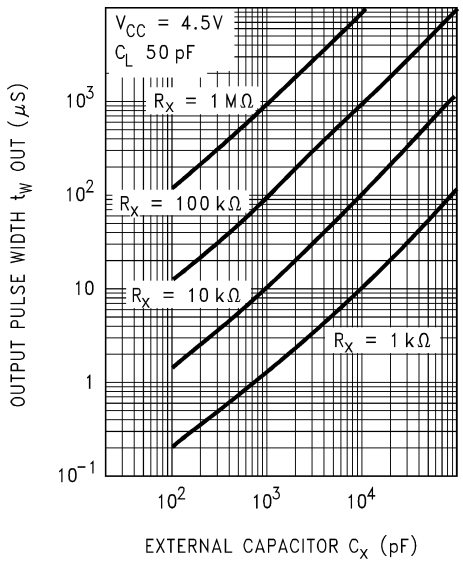

t_{RR}*V_{CC} Characteristics (Typ.)

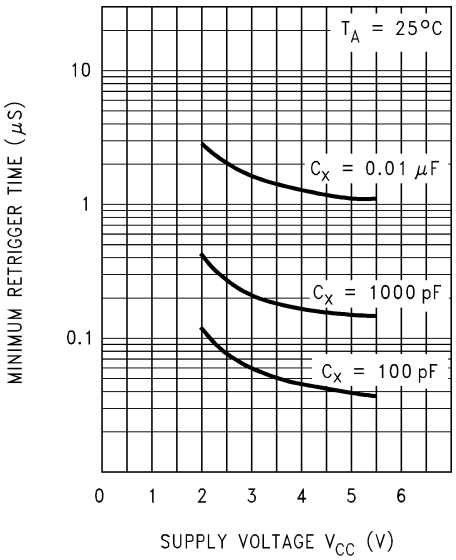

Output Pulse Width Constant K-Supply Voltage (Typ.)

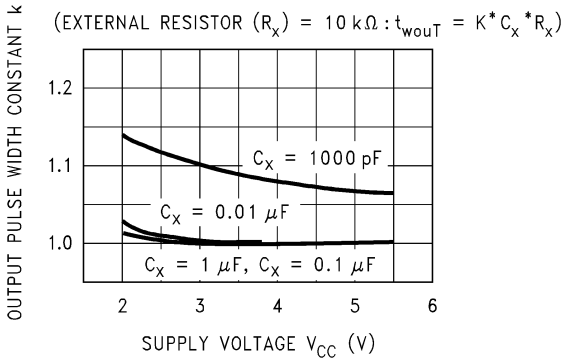

Input Equivalent Circuit

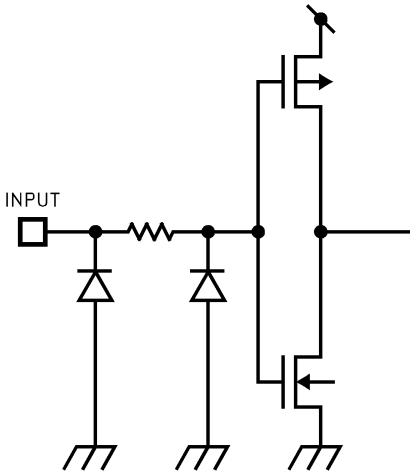

Physical Dimensions

Dimensions are in millimeters unless otherwise noted.

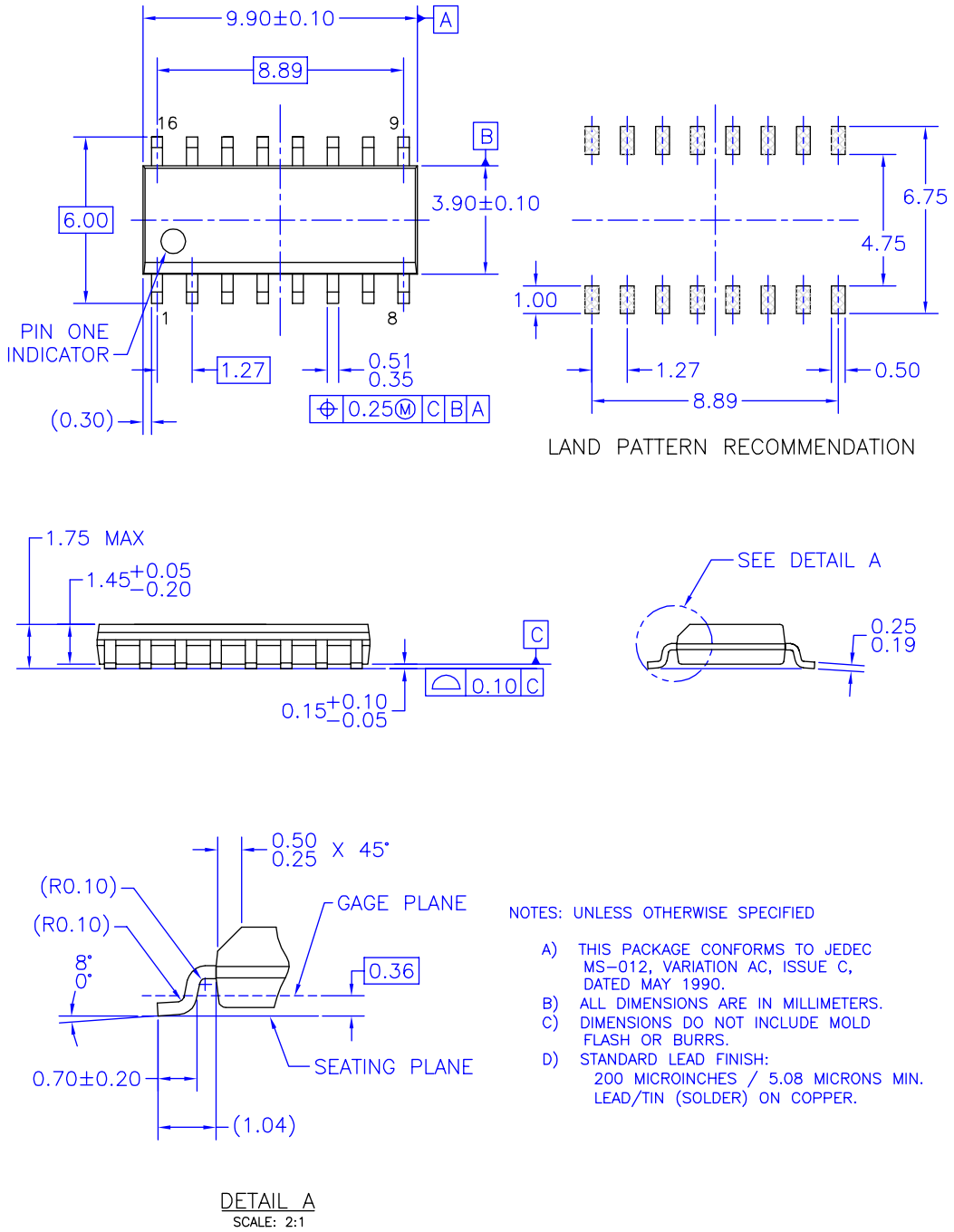

Figure 1. 16-Lead Small Outline Integrated Circuit (SOIC), JEDEC MS-012, 0.150" Narrow
Package Number M16A

Physical Dimensions (Continued)

Dimensions are in millimeters unless otherwise noted.

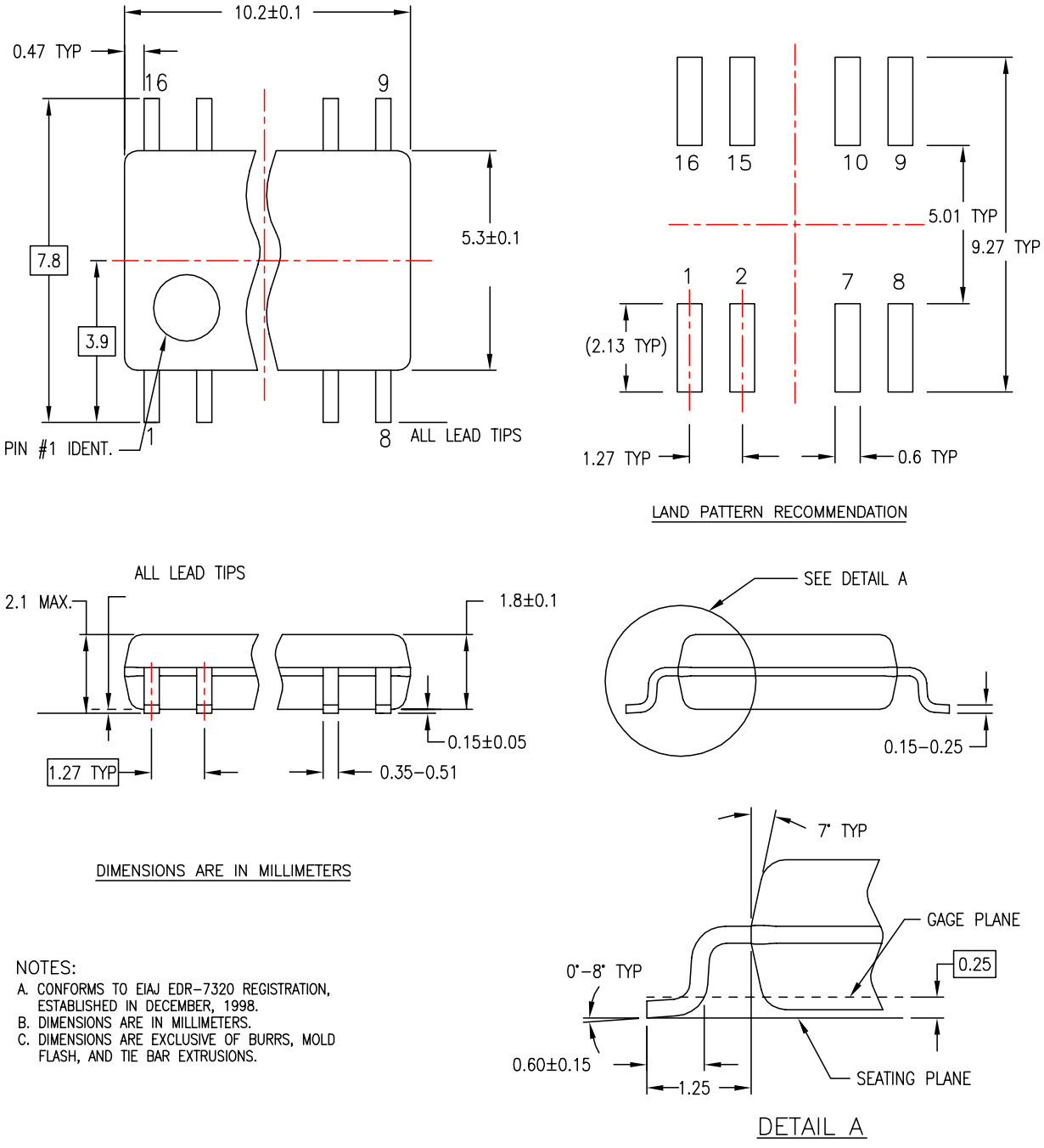

NOTES:

A. CONFORMS TO EIAJ EDR–7320 REGISTRATION, ESTABLISHED IN DECEMBER, 1998.
B. DIMENSIONS ARE IN MILLIMETERS.
C. DIMENSIONS ARE EXCLUSIVE OF BURRS, MOLD FLASH, AND TIE BAR EXTRUSIONS.

M16DREVC

Figure 2. 16-Lead Small Outline Package (SOP), EIAJ TYPE II, 5.3mm Wide
Package Number M16D

©1993 Fairchild Semiconductor Corporation

Physical Dimensions (Continued)

Dimensions are in millimeters unless otherwise noted.

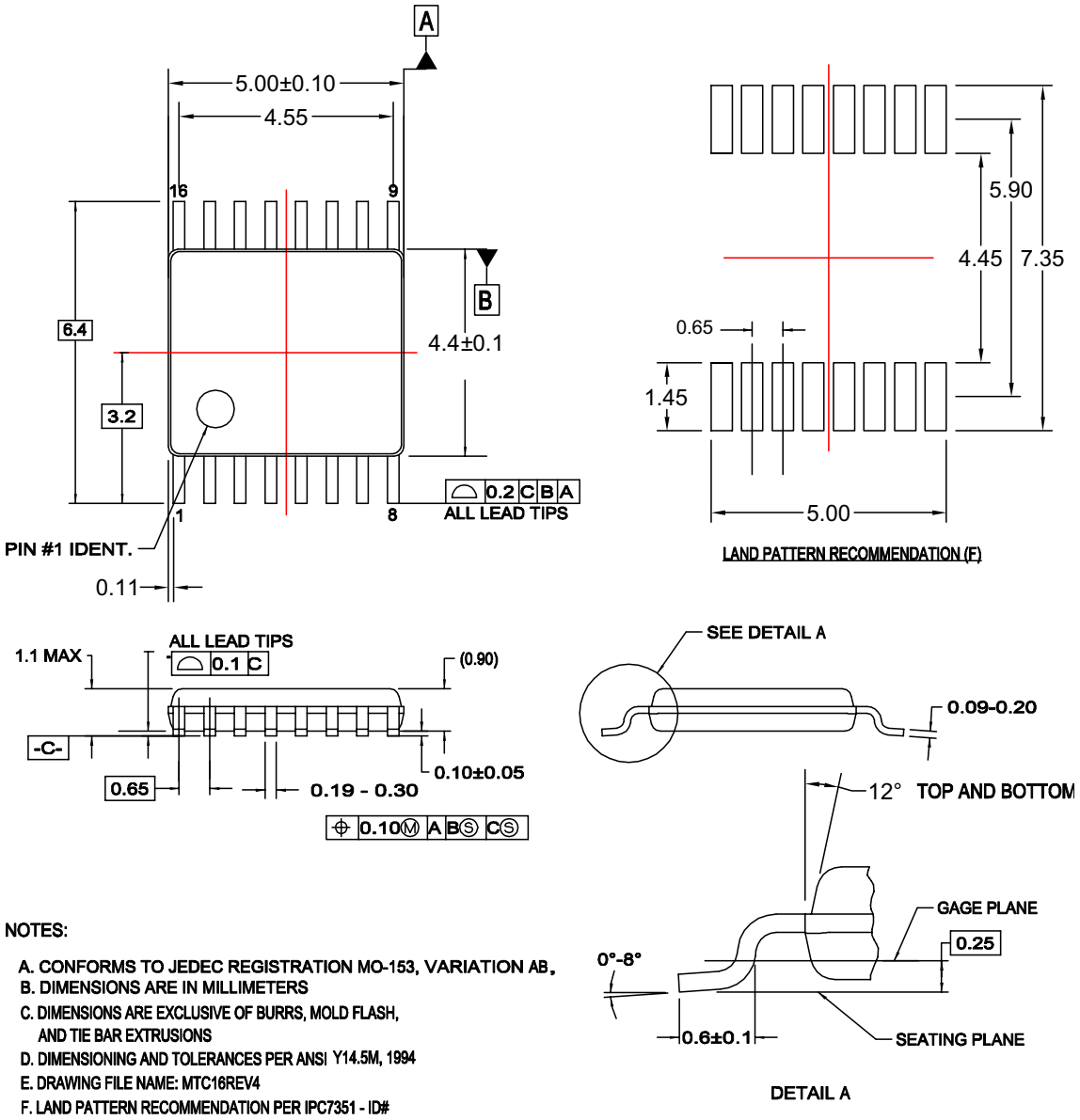

NOTES:

A. CONFORMS TO JEDEC REGISTRATION MO-153, VARIATION AB.
B. DIMENSIONS ARE IN MILLIMETERS
C. DIMENSIONS ARE EXCLUSIVE OF BURRS, MOLD FLASH, AND TIE BAR EXTRUSIONS
D. DIMENSIONING AND TOLERANCES PER ANSI Y14.5M, 1994
E. DRAWING FILE NAME: MTC16REV4
F. LAND PATTERN RECOMMENDATION PER IPC7351 - ID# TSOP65P640X110-16N

MTC16rev4

Figure 3. 16-Lead Thin Shrink Small Outline Package (TSSOP), JEDEC MO-153, 4.4mm Wide
Package Number MTC16

FAIRCHILD
SEMICONDUCTOR®

TRADEMARKS

The following are registered and unregistered trademarks Fairchild Semiconductor owns or is authorized to use and is not intended to be an exhaustive list of all such trademarks.

ACEx®
Across the board. Around the world.™
ActiveArray™
Bottomless™
Build it Now™
CoolFET™
CROSSVOLT™
CTL™
Current Transfer Logic™
DOME™
E²CMOS™
EcoSPARK®
EnSigna™
FACT Quiet Series™
FACT®
FAST®
FASTr™
FPS™
FRFET®
GlobalOptoisolator™
GTO™
HiSeC™
i-Lo™
ImpliedDisconnect™
IntelliMAX™
ISOPLANAR™
MICROCOUPLER™
MicroPak™
MICROWIRE™
Motion-SPM™
MSX™
MSXPro™
OCX™
OCXPro™
OPTOLOGIC®
OPTOPLANAR®
PACMAN™
PDP-SPM™
POP™
Power220®
Power247®
PowerEdge™
PowerSaver™
Power-SPM™
PowerTrench®
Programmable Active Droop™
QFET®
QS™
QT Optoelectronics™
Quiet Series™
RapidConfigure™
RapidConnect™
ScalarPump™
SMART START™
SPM®
STEALTH™
SuperFET™
SuperSOT™-3
SuperSOT™-6
SuperSOT™-8
SyncFET™
TCM™
The Power Franchise®
™
TinyBoost™
TinyBuck™
TinyLogic®
TINYOPTO™
TinyPower™
TinyWire™
TruTranslation™
µSerDes™
UHC®
UniFET™
VCX™
Wire™

DISCLAIMER

FAIRCHILD SEMICONDUCTOR RESERVES THE RIGHT TO MAKE CHANGES WITHOUT FURTHER NOTICE TO ANY PRODUCTS HEREIN TO IMPROVE RELIABILITY, FUNCTION OR DESIGN. FAIRCHILD DOES NOT ASSUME ANY LIABILITY ARISING OUT OF THE APPLICATION OR USE OF ANY PRODUCT OR CIRCUIT DESCRIBED HEREIN; NEITHER DOES IT CONVEY ANY LICENSE UNDER ITS PATENT RIGHTS, NOR THE RIGHTS OF OTHERS. THESE SPECIFICATIONS DO NOT EXPAND THE TERMS OF FAIRCHILD'S WORLDWIDE TERMS AND CONDITIONS, SPECIFICALLY THE WARRANTY THEREIN, WHICH COVERS THESE PRODUCTS.

LIFE SUPPORT POLICY

FAIRCHILD'S PRODUCTS ARE NOT AUTHORIZED FOR USE AS CRITICAL COMPONENTS IN LIFE SUPPORT DEVICES OR SYSTEMS WITHOUT THE EXPRESS WRITTEN APPROVAL OF FAIRCHILD SEMICONDUCTOR CORPORATION.

As used herein:

1. Life support devices or systems are devices or systems which, (a) are intended for surgical implant into the body or (b) support or sustain life, and (c) whose failure to perform when properly used in accordance with instructions for use provided in the labeling, can be reasonably expected to result in a significant injury of the user.
2. A critical component in any component of a life support, device, or system whose failure to perform can be reasonably expected to cause the failure of the life support device or system, or to affect its safety or effectiveness.

PRODUCT STATUS DEFINITIONS

Definition of Terms

Datasheet Identification	Product Status	Definition
Advance Information	Formative or In Design	This datasheet contains the design specifications for product development. Specifications may change in any manner without notice.
Preliminary	First Production	This datasheet contains preliminary data; supplementary data will be published at a later date. Fairchild Semiconductor reserves the right to make changes at any time without notice to improve design.
No Identification Needed	Full Production	This datasheet contains final specifications. Fairchild Semiconductor reserves the right to make changes at any time without notice to improve design.
Obsolete	Not In Production	This datasheet contains specifications on a product that has been discontinued by Fairchild Semiconductor. The datasheet is printed for reference information only.

Rev. I26

©1993 Fairchild Semiconductor Corporation

ENTEGRECİ

Bu belge www.entegreci.com üzerinden sunulmaktadır.

Elektronik komponent tedarikinde Entegreci

Entegreci, Eskişehir merkezli, Türkiye geneline satış yapan bir elektronik komponent mağazasıdır. Entegreler (IC), mikrodenetleyiciler, transistörler, diyotlar, pasif elemanlar, konnektörler, modüller ve geliştirme kartları tek adetten seri üretim adetlerine kadar satılır. Ürün sayfalarında güncel stok durumunu, fiyatı ve datasheet bağlantısını bulabilirsiniz.

Parça koduyla arama

Üretici parça numarasını yazın; stok ve fiyatı hemen görün.

www.entegreci.com

Ürün kategorileri

Entegreden kapasitöre tüm elektronik komponent kategorileri.

Kategorilere göz atın

Üreticiler

Aradığınız üreticinin ürünlerini tek sayfada inceleyin.

Üreticileri görün

Toplu alım ve teklif

Listede olmayan ya da yüksek adetli parçalar için teklif isteyin.

Teklif isteyin

www.entegreci.com | **destek@entegreci.com** | **0850 305 90 34**

Entegreci is an online electronic components store based in Türkiye. Search by manufacturer part number to see stock, prices and datasheets for integrated circuits, microcontrollers, transistors, passive components and connectors, or request a quote for parts that are not listed.

Bu sayfa Entegreci tarafından eklenmiştir. Belgenin önceki sayfaları asıl yayıncısına aittir ve içeriği değiştirilmemiştir; en güncel sürüm için belgenin yayıncısına başvurun.