FAIRCHILD SEMICONDUCTOR®

February 2008

74LCX574
Low Voltage Octal D-Type Flip-Flop with 5V Tolerant Inputs and Outputs

Features

- 5V tolerant inputs and outputs
- 2.3V–3.6V V_{CC} specifications provided
- 7.5ns t_{PD} max. (V_{CC} = 3.3V), 10µA I_{CC} max.
- Power down high impedance inputs and outputs
- Supports live insertion/withdrawal(1)
- ±24mA output drive (V_{CC} = 3.0V)
- Implements patented noise/EMI reduction circuitry
- Latch-up performance exceeds JEDEC 78 conditions
- ESD performance
  - – Human body model > 2000V
  - – Machine model > 200V

Note:

1. To ensure the high impedance state during power up or down, $\overline{OE}$ should be tied to V_{CC} through a pull-up resistor: the minimum value of the resistor is determined by the current-sourcing capability of the driver.

General Description

The LCX574 is a high-speed, low power octal flip-flop with a buffered common Clock (CP) and a buffered common Output Enable ($\overline{OE}$). The information presented to the D inputs is stored in the flip-flops on the LOW-to-HIGH Clock (CP) transition.

The LCX574 is functionally identical to the LCX374 except for the pinouts.

The LCX574 is designed for low voltage applications with capability of interfacing to a 5V signal environment. The LCX574 is fabricated with an advanced CMOS technology to achieve high speed operation while maintaining CMOS low power dissipation.

Ordering Information

Order Number	Package Number	Package Description
74LCX574WM	M20B	20-Lead Small Outline Integrated Circuit (SOIC), JEDEC MS-013, 0.300" Wide
74LCX574SJ	M20D	20-Lead Small Outline Package (SOP), EIAJ TYPE II, 5.3mm Wide
74LCX574BQX(2)	MLP20B	20-Terminal Depopulated Quad Very-Thin Flat Pack No Leads (DQFN), JEDEC MO-241, 2.5 x 4.5mm
74LCX574MSA	MSA20	20-Lead Shrink Small Outline Package (SSOP), JEDEC MO-150, 5.3mm Wide
74LCX574MTC	MTC20	20-Lead Thin Shrink Small Outline Package (TSSOP), JEDEC MO-153, 4.4mm Wide

Note:

2. DQFN package available in Tape and Reel only.

Device also available in Tape and Reel. Specify by appending suffix letter “X” to the ordering number.

All packages are lead free per JEDEC: J-STD-020B standard.

©2006 Fairchild Semiconductor Corporation

Connection Diagrams

Pin Assignments for SOIC, SOP, SSOP, TSSOP

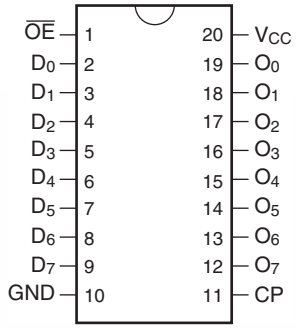

Pad Assignments for DQFN

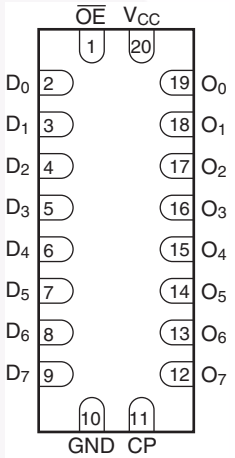

(Top View)

Pin Descriptions

Pin Names	Description
D_0–D_7	Data Inputs
CP	Clock Pulse Input
$\overline{OE}$	3-STATE Output Enable Input
O_0–O_7	3-STATE Outputs

Logic Symbol

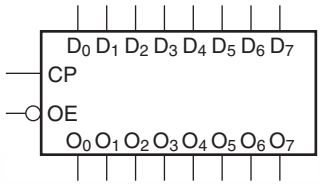

Truth Table

Inputs			Internal	Outputs	
$\overline{OE}$	CP	D	$\overline{Q}$	O_n	Function
H	H	L	NC	Z	Hold
H	H	H	NC	Z	Hold
H	↗	L	H	Z	Load
H	↗	H	L	Z	Load
L	↗	L	H	L	Data Available
L	↗	H	L	H	Data Available
L	H	L	NC	NC	No Change in Data
L	H	H	NC	NC	No Change in Data

H = HIGH Voltage Level
L = LOW Voltage Level
X = Immaterial
Z = High Impedance
↗ = LOW-to-HIGH Transition
NC = No Change

Functional Description

The LCX574 consists of eight edge-triggered flip-flops with individual D-type inputs and 3-STATE true outputs. The buffered clock and buffered Output Enable are common to all flip-flops. The eight flip-flops will store the state of their individual D inputs that meet the setup and hold time requirements on the LOW-to-HIGH Clock (CP) transition. With the Output Enable ($\overline{OE}$) LOW, the contents of the eight flip-flops are available at the outputs. When $\overline{OE}$ is HIGH, the outputs go to the high impedance state. Operation of the $\overline{OE}$ input does not affect the loading of the flip-flops.

Logic Diagram

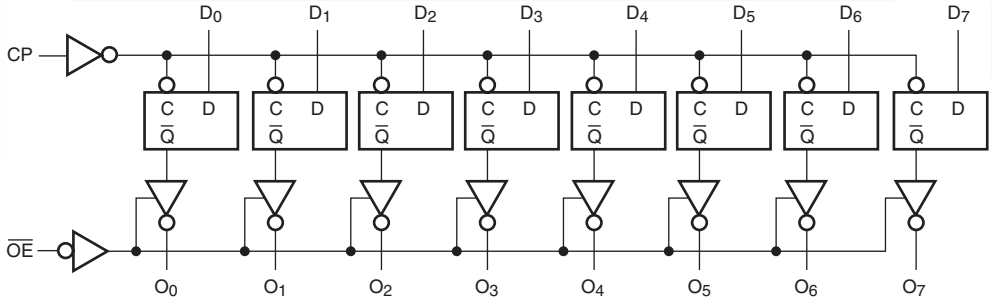

Please note that this diagram is provided only for the understanding of logic operations and should not be used to estimate propagation delays.

©2006 Fairchild Semiconductor Corporation

Absolute Maximum Ratings

Stresses exceeding the absolute maximum ratings may damage the device. The device may not function or be operable above the recommended operating conditions and stressing the parts to these levels is not recommended. In addition, extended exposure to stresses above the recommended operating conditions may affect device reliability. The absolute maximum ratings are stress ratings only.

Symbol	Parameter	Conditions	Value	Units
V_{CC}	Supply Voltage		–0.5 to +7.0	V
V_I	DC Input Voltage		–0.5 to +7.0	V
V_O	DC Output Voltage	Output in 3-STATE	–0.5 to +7.0	V
		Output in HIGH or LOW State(3)	–0.5 to V_{CC} + 0.5	
I_{IK}	DC Input Diode Current	V_I < GND	–50	mA
I_{OK}	DC Output Diode Current	V_O < GND	–50	mA
		V_O > V_{CC}	+50	
I_O	DC Output Source/Sink Current		±50	mA
I_{CC}	DC Supply Current per Supply Pin		±100	mA
I_{GND}	DC Ground Current per Ground Pin		±100	mA
T_{STG}	Storage Temperature		–65 to +150	°C

Recommended Operating Conditions(4)

The Recommended Operating Conditions table defines the conditions for actual device operation. Recommended operating conditions are specified to ensure optimal performance to the datasheet specifications. Fairchild does not recommend exceeding them or designing to absolute maximum ratings.

Symbol	Parameter	Conditions	Min.	Max.	Units
V_{CC}	Supply Voltage	Operating	2.0	3.6	V
		Data Retention	1.5	3.6	
V_I	Input Voltage		0	5.5	V
V_O	Output Voltage	HIGH or LOW State	0	V_{CC}	V
		3-STATE	0	5.5	
I_{OH}/I_{OL}	Output Current	V_{CC} = 3.0V–3.6V		±24	mA
		V_{CC} = 2.7V–3.0V		±12	
		V_{CC} = 2.3V–2.7V		±8	
T_A	Free-Air Operating Temperature		–40	85	°C
$\Delta t/\Delta V$	Input Edge Rate	V_{IN} = 0.8V–2.0V, V_{CC} = 3.0V	0	10	ns/V

Notes:

3. I_O Absolute Maximum Rating must be observed.

4. Unused inputs must be held HIGH or LOW. They may not float.

©2006 Fairchild Semiconductor Corporation

DC Electrical Characteristics

Symbol	Parameter	V_{CC} (V)	Conditions	$T_A = -40°C$ to $+85°C$		Units
				Min.	Max.	
V_{IH}	HIGH Level Input Voltage	2.3–2.7		1.7		V
		2.7–3.6		2.0		
V_{IL}	LOW Level Input Voltage	2.3–2.7			0.7	V
		2.7–3.6			0.8	
V_{OH}	HIGH Level Output Voltage	2.3–3.6	$I_{OH} = -100\mu A$	$V_{CC} - 0.2$		V
		2.3	$I_{OH} = -8mA$	1.8		
		2.7	$I_{OH} = -12mA$	2.2		
		3.0	$I_{OH} = -18mA$	2.4		
			$I_{OH} = -24mA$	2.2		
V_{OL}	LOW Level Output Voltage	2.3–3.6	$I_{OL} = 100\mu A$		0.2	V
		2.3	$I_{OL} = 8mA$		0.6	
		2.7	$I_{OL} = 12mA$		0.4	
		3.0	$I_{OL} = 16mA$		0.4	
			$I_{OL} = 24mA$		0.55	
I_I	Input Leakage Current	2.3–3.6	$0 \le V_I \le 5.5V$		±5.0	µA
I_{OZ}	3-STATE Output Leakage	2.3–3.6	$0 \le V_O \le 5.5V$, $V_I = V_{IH}$ or V_{IL}		±5.0	µA
I_{OFF}	Power-Off Leakage Current	0	V_I or $V_O = 5.5V$		10	µA
I_{CC}	Quiescent Supply Current	2.3–3.6	$V_I = V_{CC}$ or GND		10	µA
		2.3–3.6	$3.6V \le V_I, V_O \le 5.5V$[5]		±10	
ΔI_{CC}	Increase in I_{CC} per Input	2.3–3.6	$V_{IH} = V_{CC} - 0.6V$		500	µA

AC Electrical Characteristics

Symbol	Parameter	$T_A = -40°C$ to $+85°C$, $R_L = 500\Omega$						Units
		$V_{CC} = 3.3V \pm 0.3V$, $C_L = 50pF$		$V_{CC} = 2.7V$, $C_L = 50pF$		$V_{CC} = 2.5 \pm 0.2V$, $C_L = 30pF$		
		Min.	Max.	Min.	Max.	Min.	Max.	
f_{MAX}	Maximum Clock Frequency	150						MHz
t_{PHL}, t_{PLH}	Propagation Delay, CP to O_n	1.5	8.5	1.5	9.5	1.5	10.5	ns
t_{PZL}, t_{PZH}	Output Enable Time	1.5	8.5	1.5	9.5	1.5	10.5	ns
t_{PLZ}, t_{PHZ}	Output Disable Time	1.5	6.5	1.5	7.0	1.5	7.8	ns
t_S	Setup Time	2.5		2.5		4.0		ns
t_H	Hold Time	1.5		1.5		2.0		ns
t_W	Pulse Width	3.3		3.3		4.0		ns
t_{OSHL}, t_{OSLH}	Output to Output Skew[6]		1.0					ns

Notes:

5. Outputs disabled or 3-STATE only.

6. Skew is defined as the absolute value of the difference between the actual propagation delay for any two separate outputs of the same device. The specification applies to any outputs switching in the same direction, either HIGH-to-LOW (t_{OSHL}) or LOW-to-HIGH (t_{OSLH}).

©2006 Fairchild Semiconductor Corporation

Dynamic Switching Characteristics

Symbol	Parameter	V_{CC} (V)	Conditions	$T_A = 25°C$ Typical	Units
V_{OLP}	Quiet Output Dynamic Peak V_{OL}	3.3	$C_L = 50pF$, $V_{IH} = 3.3V$, $V_{IL} = 0V$	0.8	V
		2.5	$C_L = 30pF$, $V_{IH} = 2.5V$, $V_{IL} = 0V$	0.6	
V_{OLV}	Quiet Output Dynamic Valley V_{OL}	3.3	$C_L = 50pF$, $V_{IH} = 3.3V$, $V_{IL} = 0V$	–0.8	V
		2.5	$C_L = 30pF$, $V_{IH} = 2.5V$, $V_{IL} = 0V$	–0.6	

Capacitance

Symbol	Parameter	Conditions	Typical	Units
C_{IN}	Input Capacitance	V_{CC} = Open, $V_I = 0V$ or V_{CC}	7	pF
C_{OUT}	Output Capacitance	$V_{CC} = 3.3V$, $V_I = 0V$ or V_{CC}	8	pF
C_{PD}	Power Dissipation Capacitance	$V_{CC} = 3.3V$, $V_I = 0V$ or V_{CC}, f = 10MHz	25	pF

©2006 Fairchild Semiconductor Corporation

AC Loading and Waveforms (Generic for LCX Family)

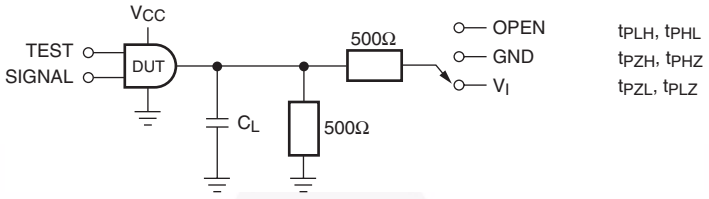

Figure 1. AC Test Circuit (C_L includes probe and jig capacitance)

Test	Switch
t_{PLH}, t_{PHL}	Open
t_{PZL}, t_{PLZ}	6V at V_{CC} = 3.3 ± 0.3V V_{CC} x 2 at V_{CC} = 2.5 ± 0.2V
t_{PZH}, t_{PHZ}	GND

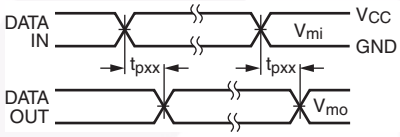

Waveform for Inverting and Non-Inverting Functions

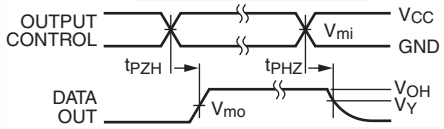

3-STATE Output High Enable and Disable Times for Logic

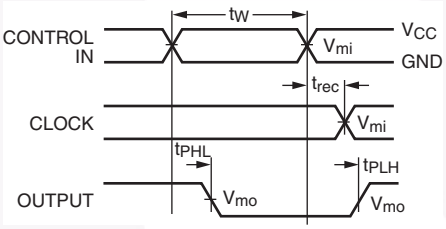

Propagation Delay, Pulse Width and t_{rec} Waveforms

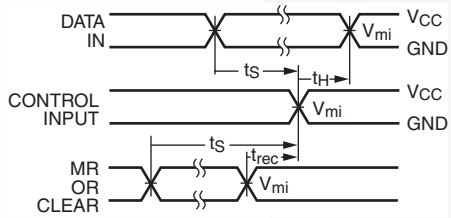

Setup Time, Hold Time and Recovery Time for Logic

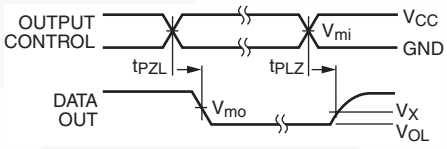

3-STATE Output Low Enable and Disable Times for Logic

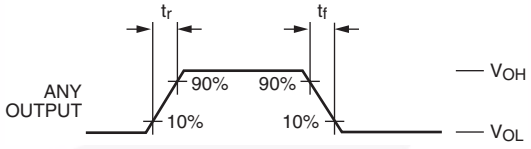

t_{rise} and t_{fall}

Figure 2. Waveforms (Input Characteristics; f =1MHz, t_r = t_f = 3ns)

Symbol	V_{CC}		
	3.3V ± 0.3V	2.7V	2.5V ± 0.2V
V_{mi}	1.5V	1.5V	V_{CC} / 2
V_{mo}	1.5V	1.5V	V_{CC} / 2
V_x	V_{OL} + 0.3V	V_{OL} + 0.3V	V_{OL} + 0.15V
V_y	V_{OH} – 0.3V	V_{OH} – 0.3V	V_{OH} – 0.15V

Schematic Diagram (Generic for LCX Family)

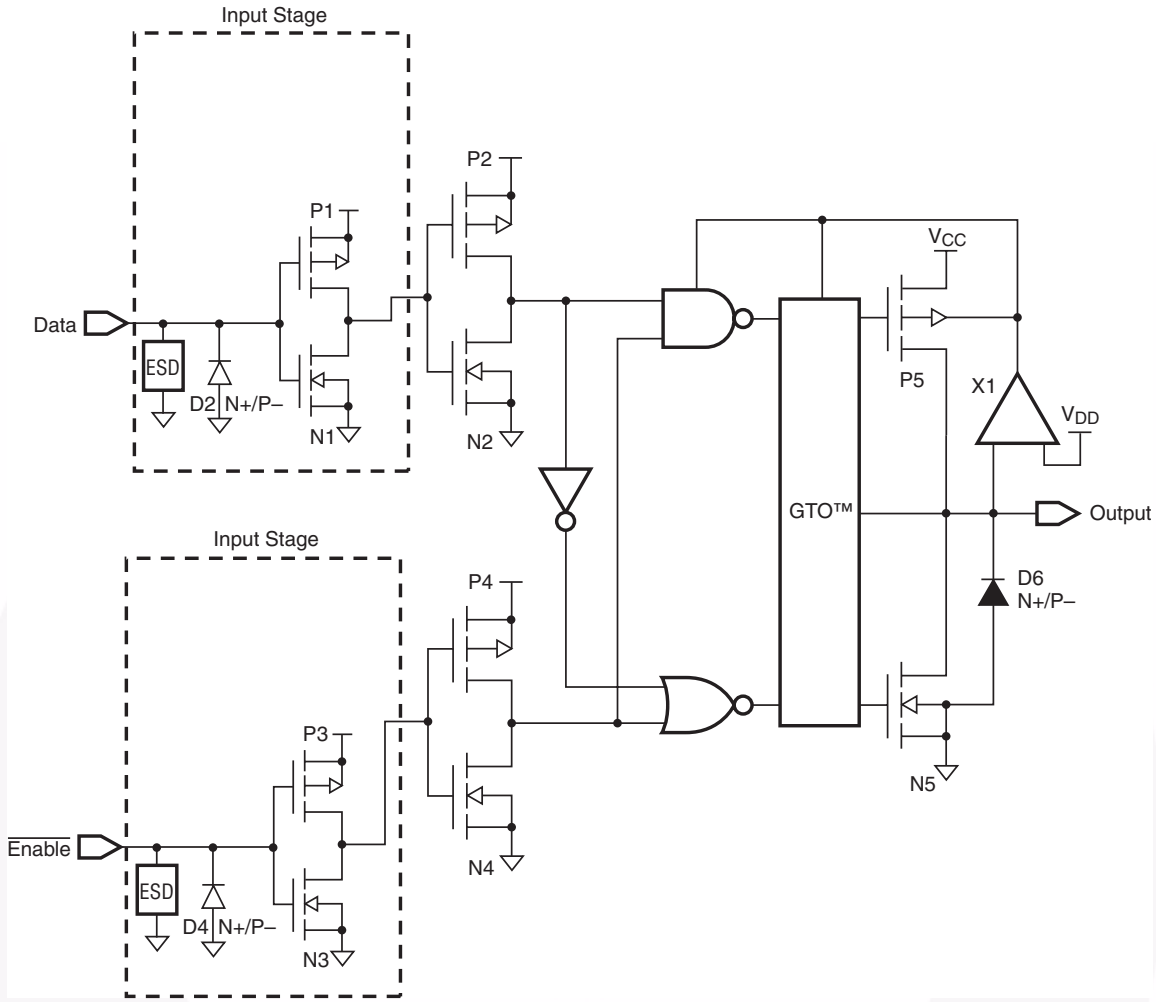

Tape and Reel Specification

Tape Format for DQFN

Package Designator	Tape Section	Number Cavities	Cavity Status	Cover Tape Status
BQX	Leader (Start End)	125 (typ)	Empty	Sealed
	Carrier	3000	Filled	Sealed
	Trailer (Hub End)	75 (typ)	Empty	Sealed

Tape Dimensions inches (millimeters)

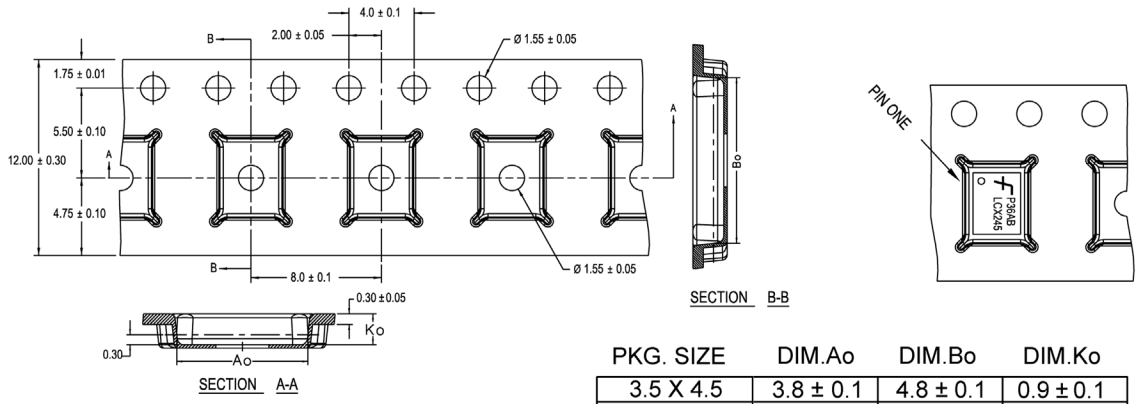

PKG. SIZE	DIM.Ao	DIM.Bo	DIM.Ko
3.5 X 4.5	3.8 ± 0.1	4.8 ± 0.1	0.9 ± 0.1
3.0 X 3.0	3.3 ± 0.1	3.3 ± 0.1	0.9 ± 0.1
2.5 X 4.5	2.8 ± 0.1	4.8 ± 0.1	0.9 ± 0.1
2.5 X 3.5	2.8 ± 0.1	3.8 ± 0.1	0.9 ± 0.1
2.5 X 3.0	2.8 ± 0.1	3.3 ± 0.1	0.9 ± 0.1
2.5 X 2.5	2.8 ± 0.1	2.8 ± 0.1	0.9 ± 0.1

DIMENSIONS ARE IN MILLIMETERS

NOTES: unless otherwise specified

1. Cummulative pitch for feeding holes and cavities (chip pockets) not to exceed 0.008[0.20] over 10 pitch span.
2. Smallest allowable bending radius.
3. Thru hole inside cavity is centered within cavity.
4. Tolerance is ±0.002[0.05] for these dimensions on all 12mm tapes.
5. Ao and Bo measured on a plane 0.120[0.30] above the bottom of the pocket.
6. Ko measured from a plane on the inside bottom of the pocket to the top surface of the carrier.
7. Pocket position relative to sprocket hole measured as true position of pocket. Not pocket hole.
8. Controlling dimension is millimeter. Diemension in inches rounded.

Reel Dimensions inches (millimeters)

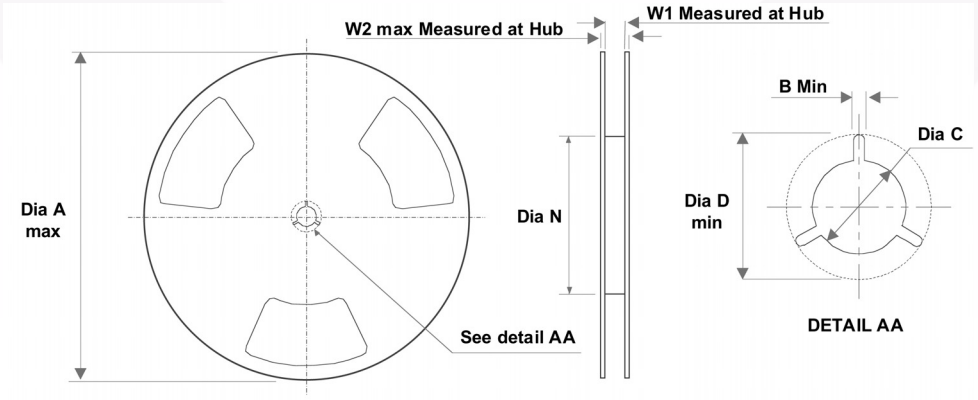

Tape Size	A	B	C	D	N	W1	W2
12mm	13.0 (330.0)	0.059 (1.50)	0.512 (13.00)	0.795 (20.20)	2.165 (55.00)	0.488 (12.4)	0.724 (18.4)

©2006 Fairchild Semiconductor Corporation

Physical Dimensions

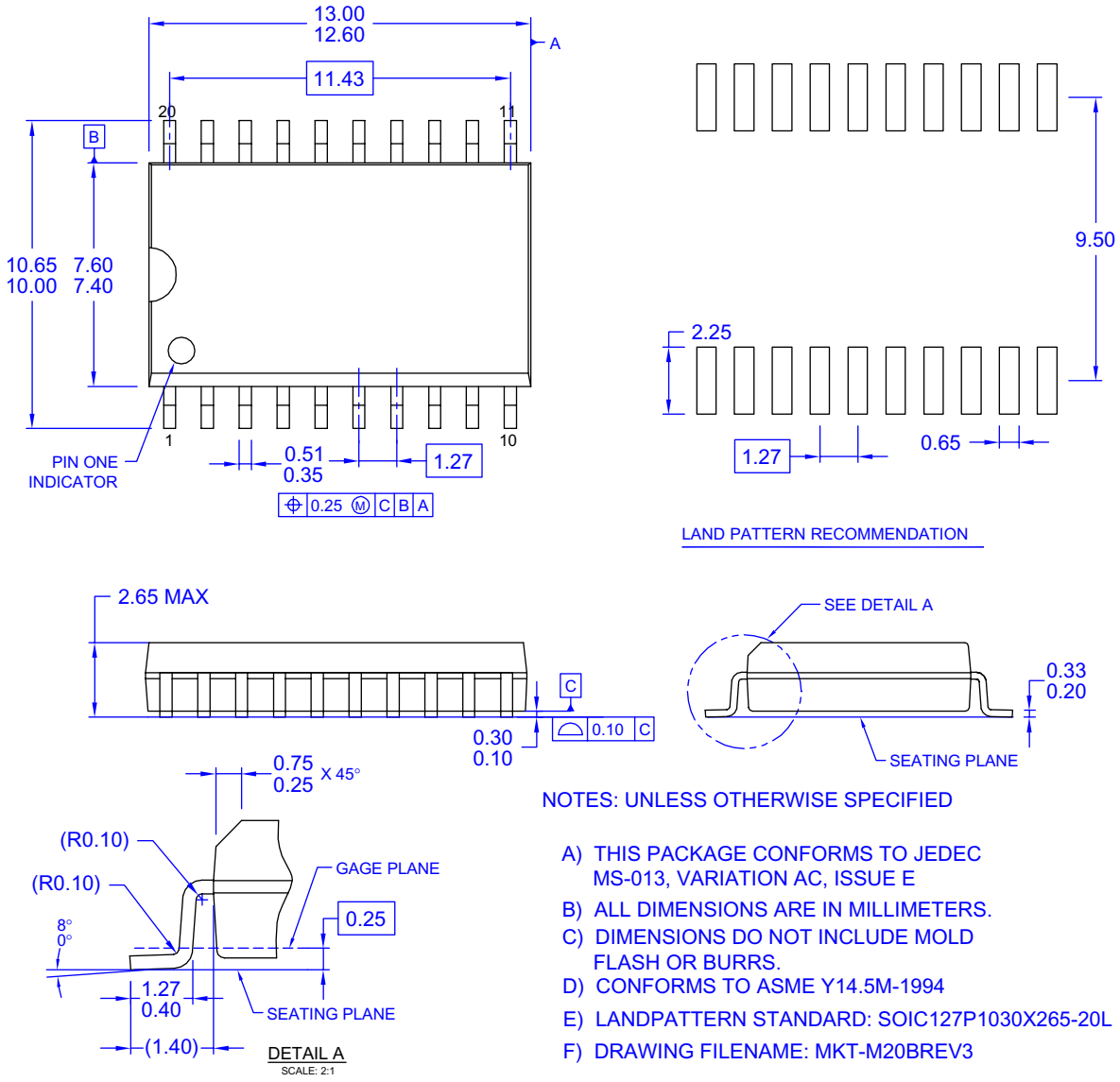

Figure 3. 20-Lead Small Outline Integrated Circuit (SOIC), JEDEC MS-013, 0.300" Wide

Package drawings are provided as a service to customers considering Fairchild components. Drawings may change in any manner without notice. Please note the revision and/or date on the drawing and contact a Fairchild Semiconductor representative to verify or obtain the most recent revision. Package specifications do not expand the terms of Fairchild's worldwide terms and conditions, specifically the warranty therein, which covers Fairchild products.

Always visit Fairchild Semiconductor's online packaging area for the most recent package drawings:

http://www.fairchildsemi.com/packaging/

Physical Dimensions (Continued)

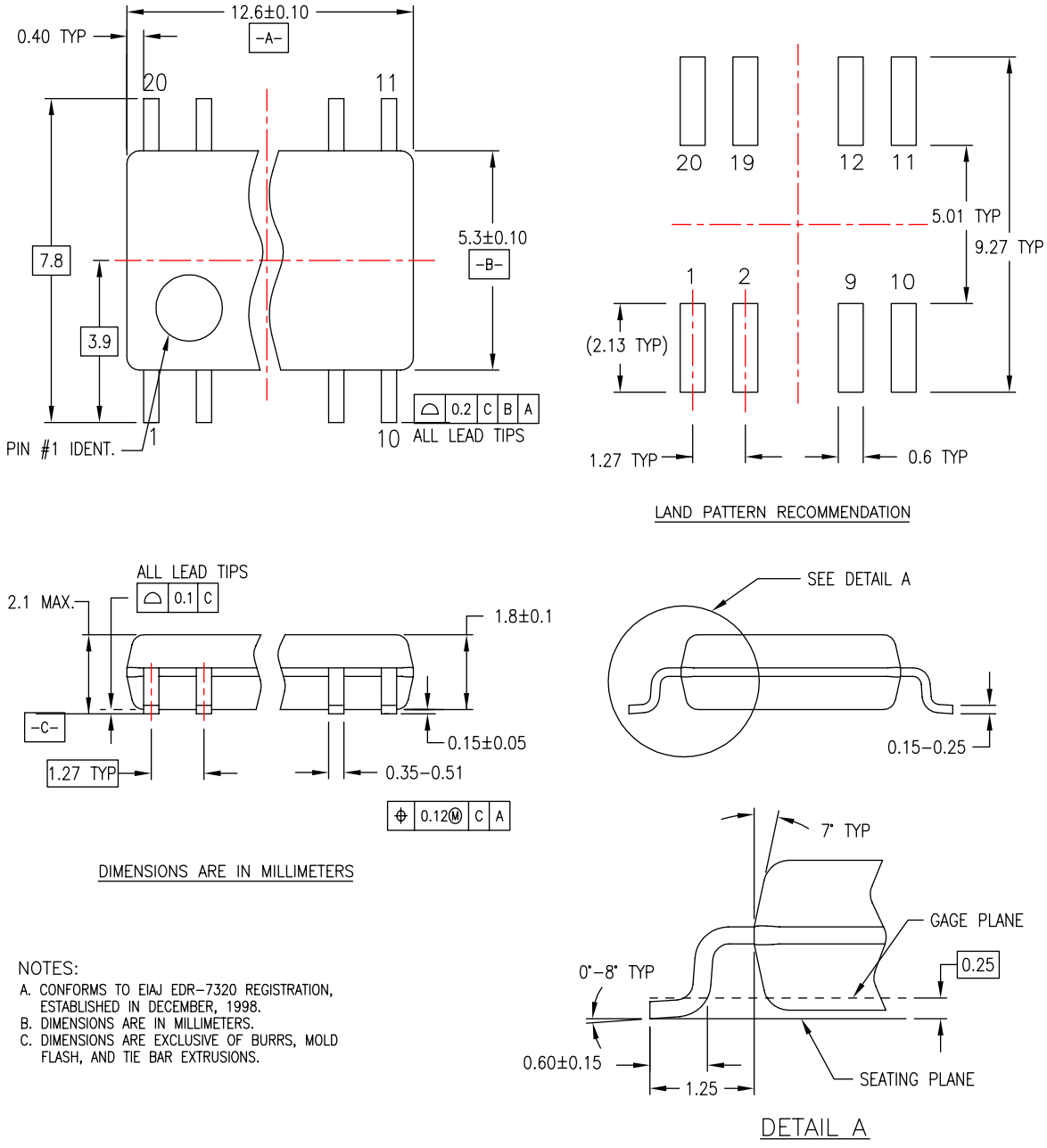

NOTES:

A. CONFORMS TO EIAJ EDR-7320 REGISTRATION, ESTABLISHED IN DECEMBER, 1998.
B. DIMENSIONS ARE IN MILLIMETERS.
C. DIMENSIONS ARE EXCLUSIVE OF BURRS, MOLD FLASH, AND TIE BAR EXTRUSIONS.

M20DREVC

Figure 4. 20-Lead Small Outline Package (SOP), EIAJ TYPE II, 5.3mm Wide

Package drawings are provided as a service to customers considering Fairchild components. Drawings may change in any manner without notice. Please note the revision and/or date on the drawing and contact a Fairchild Semiconductor representative to verify or obtain the most recent revision. Package specifications do not expand the terms of Fairchild's worldwide terms and conditions, specifically the warranty therein, which covers Fairchild products.

Always visit Fairchild Semiconductor's online packaging area for the most recent package drawings:

http://www.fairchildsemi.com/packaging/

Physical Dimensions (Continued)

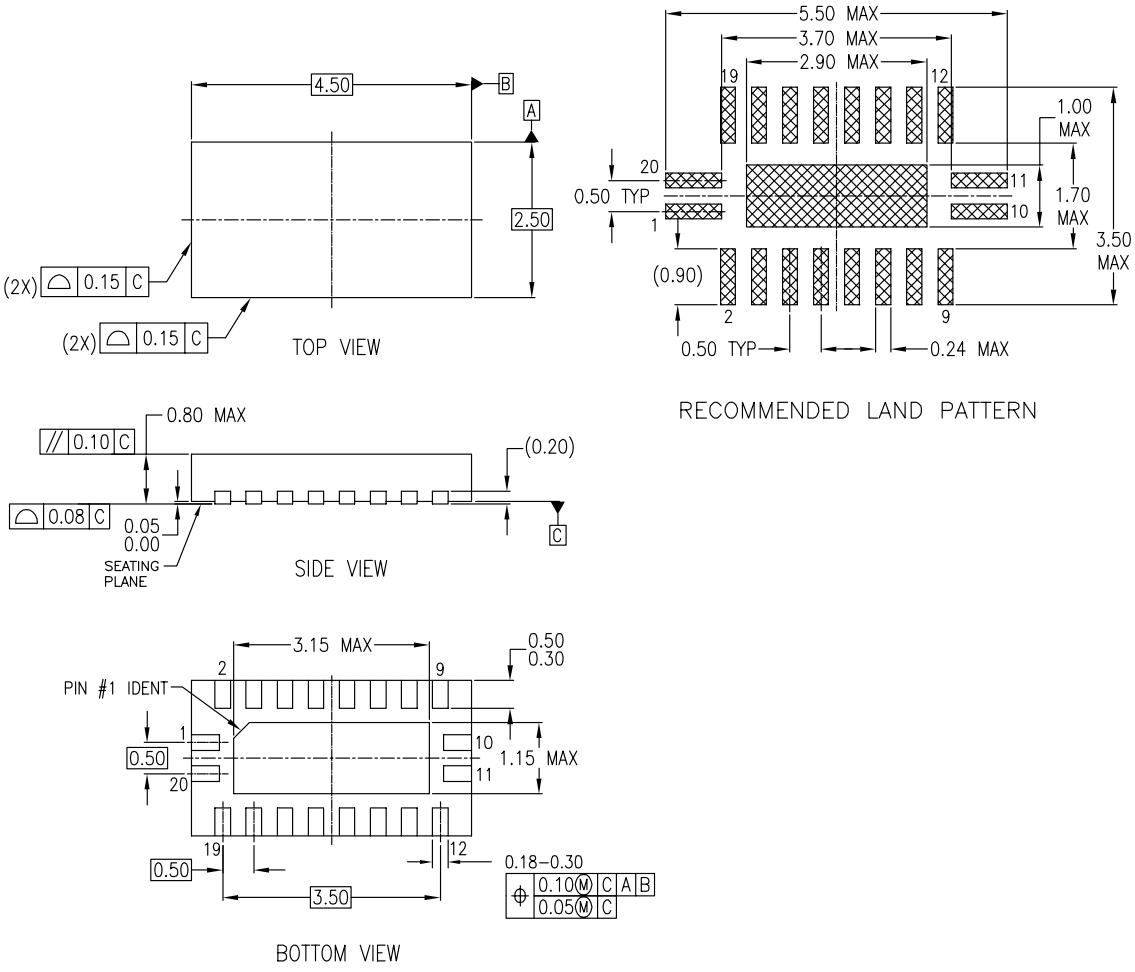

NOTES:

A. CONFORMS TO JEDEC REGISTRATION MO–241, VARIATION AC
B. DIMENSIONS ARE IN MILLIMETERS.
C. DIMENSIONS AND TOLERANCES PER ASME Y14.5M, 1994

MLP20BrevA

Figure 5. 20-Terminal Depopulated Quad Very-Thin Flat Pack No Leads (DQFN), JEDEC MO-241, 2.5 x 4.5mm

Package drawings are provided as a service to customers considering Fairchild components. Drawings may change in any manner without notice. Please note the revision and/or date on the drawing and contact a Fairchild Semiconductor representative to verify or obtain the most recent revision. Package specifications do not expand the terms of Fairchild's worldwide terms and conditions, specifically the warranty therein, which covers Fairchild products.

Always visit Fairchild Semiconductor's online packaging area for the most recent package drawings:

http://www.fairchildsemi.com/packaging/

Physical Dimensions (Continued)

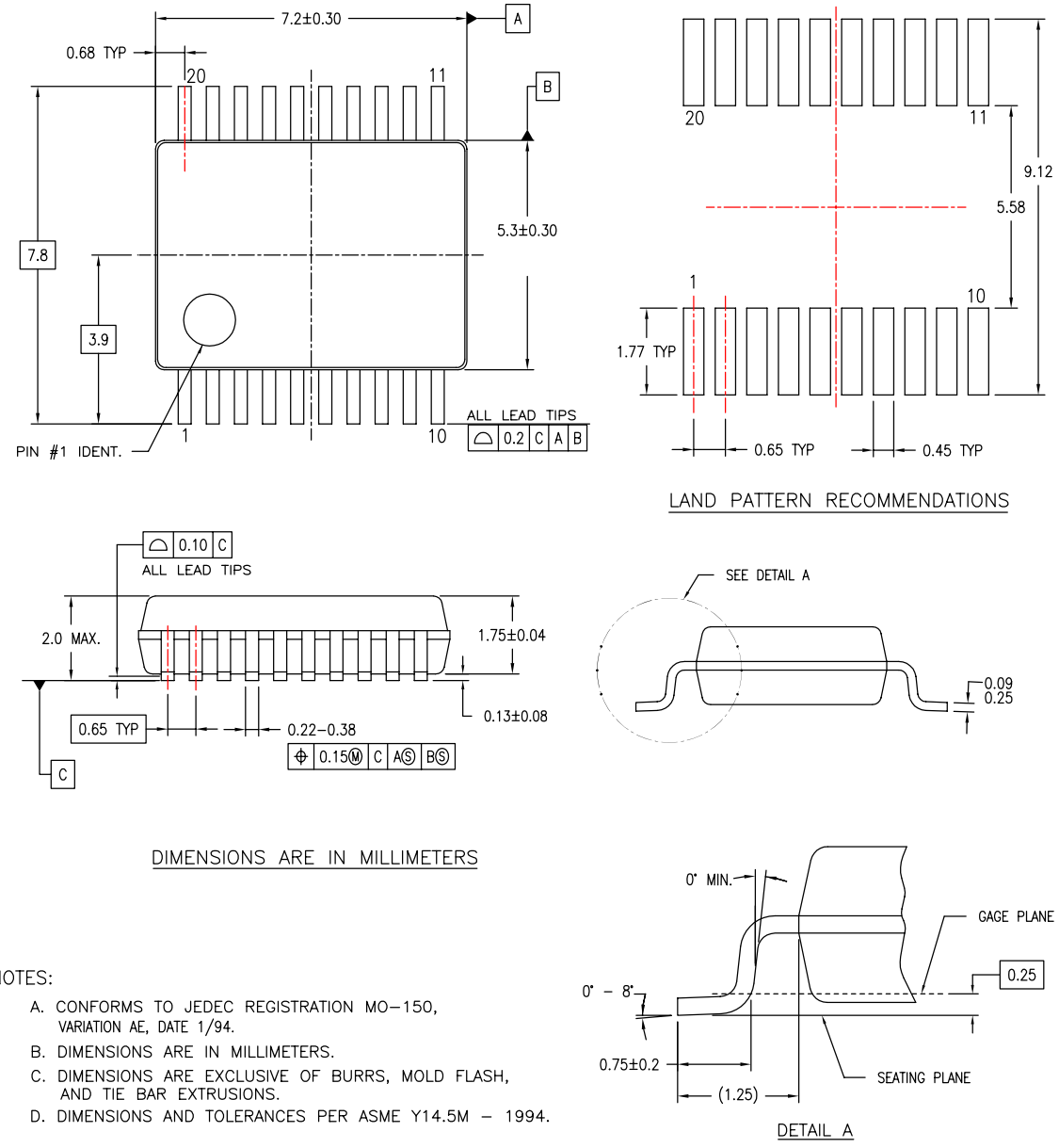

NOTES:

A. CONFORMS TO JEDEC REGISTRATION MO–150, VARIATION AE, DATE 1/94.

B. DIMENSIONS ARE IN MILLIMETERS.

C. DIMENSIONS ARE EXCLUSIVE OF BURRS, MOLD FLASH, AND TIE BAR EXTRUSIONS.

D. DIMENSIONS AND TOLERANCES PER ASME Y14.5M – 1994.

MSA20REVB

Figure 6. 20-Lead Shrink Small Outline Package (SSOP), JEDEC MO-150, 5.3mm Wide

Package drawings are provided as a service to customers considering Fairchild components. Drawings may change in any manner without notice. Please note the revision and/or date on the drawing and contact a Fairchild Semiconductor representative to verify or obtain the most recent revision. Package specifications do not expand the terms of Fairchild's worldwide terms and conditions, specifically the warranty therein, which covers Fairchild products.

Always visit Fairchild Semiconductor's online packaging area for the most recent package drawings:

http://www.fairchildsemi.com/packaging/

Physical Dimensions (Continued)

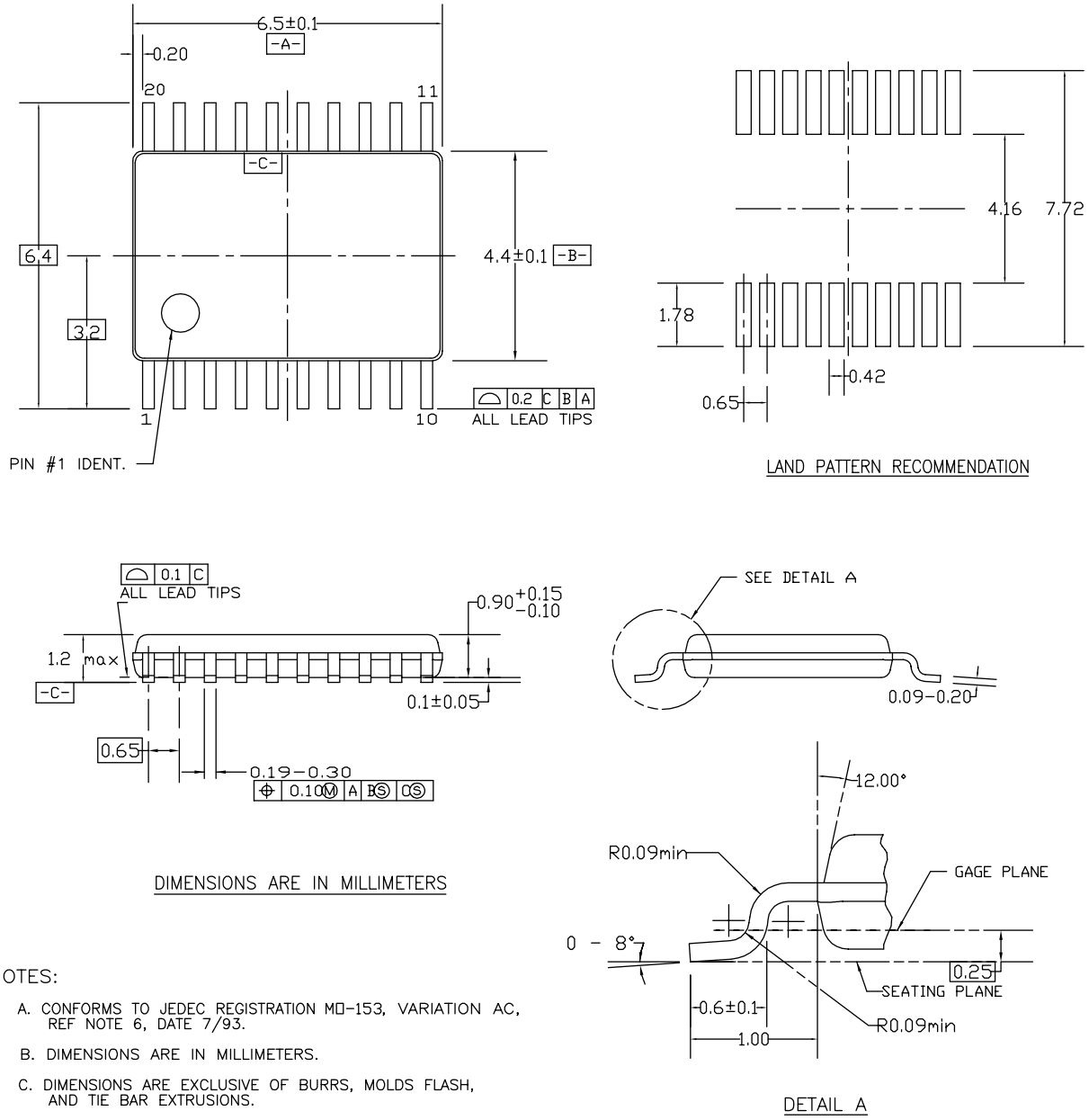

NOTES:

A. CONFORMS TO JEDEC REGISTRATION MO-153, VARIATION AC, REF NOTE 6, DATE 7/93.

B. DIMENSIONS ARE IN MILLIMETERS.

C. DIMENSIONS ARE EXCLUSIVE OF BURRS, MOLDS FLASH, AND TIE BAR EXTRUSIONS.

D. DIMENSIONS AND TOLERANCES PER ANSI Y14.5M, 1982.

MTC20REVD1

Figure 7. 20-Lead Thin Shrink Small Outline Package (TSSOP), JEDEC MO-153, 4.4mm Wide

Package drawings are provided as a service to customers considering Fairchild components. Drawings may change in any manner without notice. Please note the revision and/or date on the drawing and contact a Fairchild Semiconductor representative to verify or obtain the most recent revision. Package specifications do not expand the terms of Fairchild's worldwide terms and conditions, specifically the warranty therein, which covers Fairchild products.

Always visit Fairchild Semiconductor's online packaging area for the most recent package drawings:

http://www.fairchildsemi.com/packaging/

FAIRCHILD SEMICONDUCTOR®

TRADEMARKS

The following includes registered and unregistered trademarks and service marks, owned by Fairchild Semiconductor and/or its global subsidiaries, and is not intended to be an exhaustive list of all such trademarks.

ACEx®
Build it Now™
CorePLUS™
CROSSVOLT™
CTL™
Current Transfer Logic™
EcoSPARK®
EZSWITCH™ *
™
®
Fairchild®
Fairchild Semiconductor®
FACT Quiet Series™
FACT®
FAST®
FastvCore™
FlashWriter® *
FPS™
FRFET®
Global Power Resource℠
Green FPS™
Green FPS™ e-Series™
GTO™
i-Lo™
IntelliMAX™
ISOPLANAR™
MegaBuck™
MICROCOUPLER™
MicroFET™
MicroPak™
MillerDrive™
Motion-SPM™
OPTOLOGIC®
OPTOPLANAR®
®
PDP-SPM™
Power220®
POWEREDGE®
Power-SPM™
PowerTrench®
Programmable Active Droop™
QFET®
QS™
QT Optoelectronics™
Quiet Series™
RapidConfigure™
SMART START™
SPM®
STEALTH™
SuperFET™
SuperSOT™-3
SuperSOT™-6
SuperSOT™-8
SupreMOS™
SyncFET™
SYSTEM GENERAL ®
The Power Franchise®
the power franchise
TinyBoost™
TinyBuck™
TinyLogic®
TINYOPTO™
TinyPower™
TinyPWM™
TinyWire™
µSerDes™
UHC®
Ultra FRFET™
UniFET™
VCX™

* EZSWITCH™ and FlashWriter® are trademarks of System General Corporation, used under license by Fairchild Semiconductor.

DISCLAIMER

FAIRCHILD SEMICONDUCTOR RESERVES THE RIGHT TO MAKE CHANGES WITHOUT FURTHER NOTICE TO ANY PRODUCTS HEREIN TO IMPROVE RELIABILITY, FUNCTION, OR DESIGN. FAIRCHILD DOES NOT ASSUME ANY LIABILITY ARISING OUT OF THE APPLICATION OR USE OF ANY PRODUCT OR CIRCUIT DESCRIBED HEREIN; NEITHER DOES IT CONVEY ANY LICENSE UNDER ITS PATENT RIGHTS, NOR THE RIGHTS OF OTHERS. THESE SPECIFICATIONS DO NOT EXPAND THE TERMS OF FAIRCHILD'S WORLDWIDE TERMS AND CONDITIONS, SPECIFICALLY THE WARRANTY THEREIN, WHICH COVERS THESE PRODUCTS.

LIFE SUPPORT POLICY

FAIRCHILD'S PRODUCTS ARE NOT AUTHORIZED FOR USE AS CRITICAL COMPONENTS IN LIFE SUPPORT DEVICES OR SYSTEMS WITHOUT THE EXPRESS WRITTEN APPROVAL OF FAIRCHILD SEMICONDUCTOR CORPORATION.

As used herein:

1. Life support devices or systems are devices or systems which, (a) are intended for surgical implant into the body or (b) support or sustain life, and (c) whose failure to perform when properly used in accordance with instructions for use provided in the labeling, can be reasonably expected to result in a significant injury of the user.
2. A critical component in any component of a life support, device, or system whose failure to perform can be reasonably expected to cause the failure of the life support device or system, or to affect its safety or effectiveness.

PRODUCT STATUS DEFINITIONS

Definition of Terms

Datasheet Identification	Product Status	Definition
Advance Information	Formative or In Design	This datasheet contains the design specifications for product development. Specifications may change in any manner without notice.
Preliminary	First Production	This datasheet contains preliminary data; supplementary data will be published at a later date. Fairchild Semiconductor reserves the right to make changes at any time without notice to improve design.
No Identification Needed	Full Production	This datasheet contains final specifications. Fairchild Semiconductor reserves the right to make changes at any time without notice to improve the design.
Obsolete	Not In Production	This datasheet contains specifications on a product that has been discontinued by Fairchild Semiconductor. The datasheet is printed for reference information only.

Rev. I33

ENTEGRECİ

Bu belge www.entegreci.com üzerinden sunulmaktadır.

Elektronik komponent tedarikinde Entegreci

Entegreci, Eskişehir merkezli, Türkiye geneline satış yapan bir elektronik komponent mağazasıdır. Entegreler (IC), mikrodenetleyiciler, transistörler, diyotlar, pasif elemanlar, konnektörler, modüller ve geliştirme kartları tek adetten seri üretim adetlerine kadar satılır. Ürün sayfalarında güncel stok durumunu, fiyatı ve datasheet bağlantısını bulabilirsiniz.

Parça koduyla arama

Üretici parça numarasını yazın; stok ve fiyatı hemen görün.

www.entegreci.com

Ürün kategorileri

Entegreden kapasitöre tüm elektronik komponent kategorileri.

Kategorilere göz atın

Üreticiler

Aradığınız üreticinin ürünlerini tek sayfada inceleyin.

Üreticileri görün

Toplu alım ve teklif

Listede olmayan ya da yüksek adetli parçalar için teklif isteyin.

Teklif isteyin

www.entegreci.com | **destek@entegreci.com** | **0850 305 90 34**

Entegreci is an online electronic components store based in Türkiye. Search by manufacturer part number to see stock, prices and datasheets for integrated circuits, microcontrollers, transistors, passive components and connectors, or request a quote for parts that are not listed.

Bu sayfa Entegreci tarafından eklenmiştir. Belgenin önceki sayfaları asıl yayıncısına aittir ve içeriği değiştirilmemiştir; en güncel sürüm için belgenin yayıncısına başvurun.