DATA SHEET

For a complete data sheet, please also download:

- The IC04 LOCMOS HE4000B Logic Family Specifications HEF, HEC
- The IC04 LOCMOS HE4000B Logic Package Outlines/Information HEF, HEC

HEF4528B
MSI
Dual monostable multivibrator

Product specification
File under Integrated Circuits, IC04

January 1995

Philips Semiconductors

PHILIPS

Dual monostable multivibrator

HEF4528B MSI

DESCRIPTION

The HEF4528B is a dual retriggerable-resettable monostable multivibrator. Each multivibrator has an active LOW input ($\overline{I}_0$), and active HIGH input (I_1), an active LOW clear direct input ($\overline{C}_D$), an output (O) and its complement ($\overline{O}$), and two pins for connecting the external timing components (C_{TC}(1), RC_{TC}).

An external timing capacitor (C_t) must be connected between C_{TC} and RC_{TC} and an external resistor (R_t) must be connected between RC_{TC} and V_{DD}. The duration of the output pulse is determined by the external timing components C_t and R_t.

A HIGH to LOW transition on $\overline{I}_0$ when I_1 is LOW or a LOW to HIGH transition on I_1 when $\overline{I}_0$ is HIGH produces a positive pulse (LOW-HIGH-LOW) and O and a negative pulse (HIGH-LOW-HIGH) on $\overline{O}$ if the $\overline{C}_D$ is HIGH. A LOW on $\overline{C}_D$ forces O LOW, O HIGH and inhibits any further pulses until $\overline{C}_D$ is HIGH.

(1) Always connected to ground.

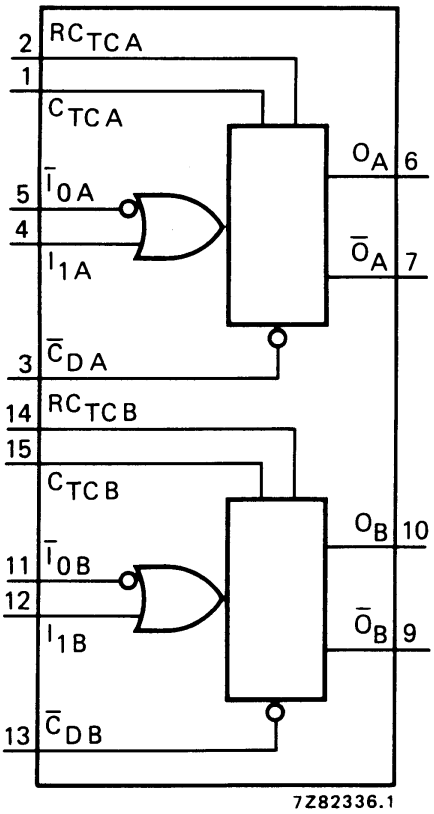

Fig.1 Functional diagram.

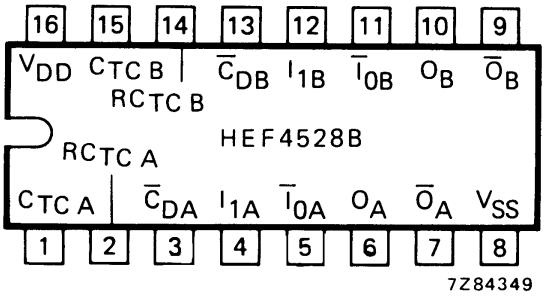

Fig.2 Pinning diagram.

HEF4528BP(N): 16-lead DIL; plastic (SOT38-1)
HEF4528BD(F): 16-lead DIL; ceramic (cerdip) (SOT74)
HEF4528BT(D): 16-lead SO; plastic (SOT109-1)
( ): Package Designator North America

PINNING

$\overline{I}_{0A}$, $\overline{I}_{0B}$	input (HIGH to LOW triggered)
I_{1A}, I_{1B}	input (LOW to HIGH triggered)
$\overline{C}_{DA}$, $\overline{C}_{DB}$	clear direct input (active LOW)
O_A, O_B	output
$\overline{O}_A$, $\overline{O}_B$	complementary output (active LOW)
$C_{TC\,A}$, $C_{TC\,B}$	external capacitor connections (1)
$RC_{TC\,A}$, $RC_{TC\,B}$	external capacitor/ resistor connections

FAMILY DATA, I_{DD} LIMITS category MSI

See Family Specifications

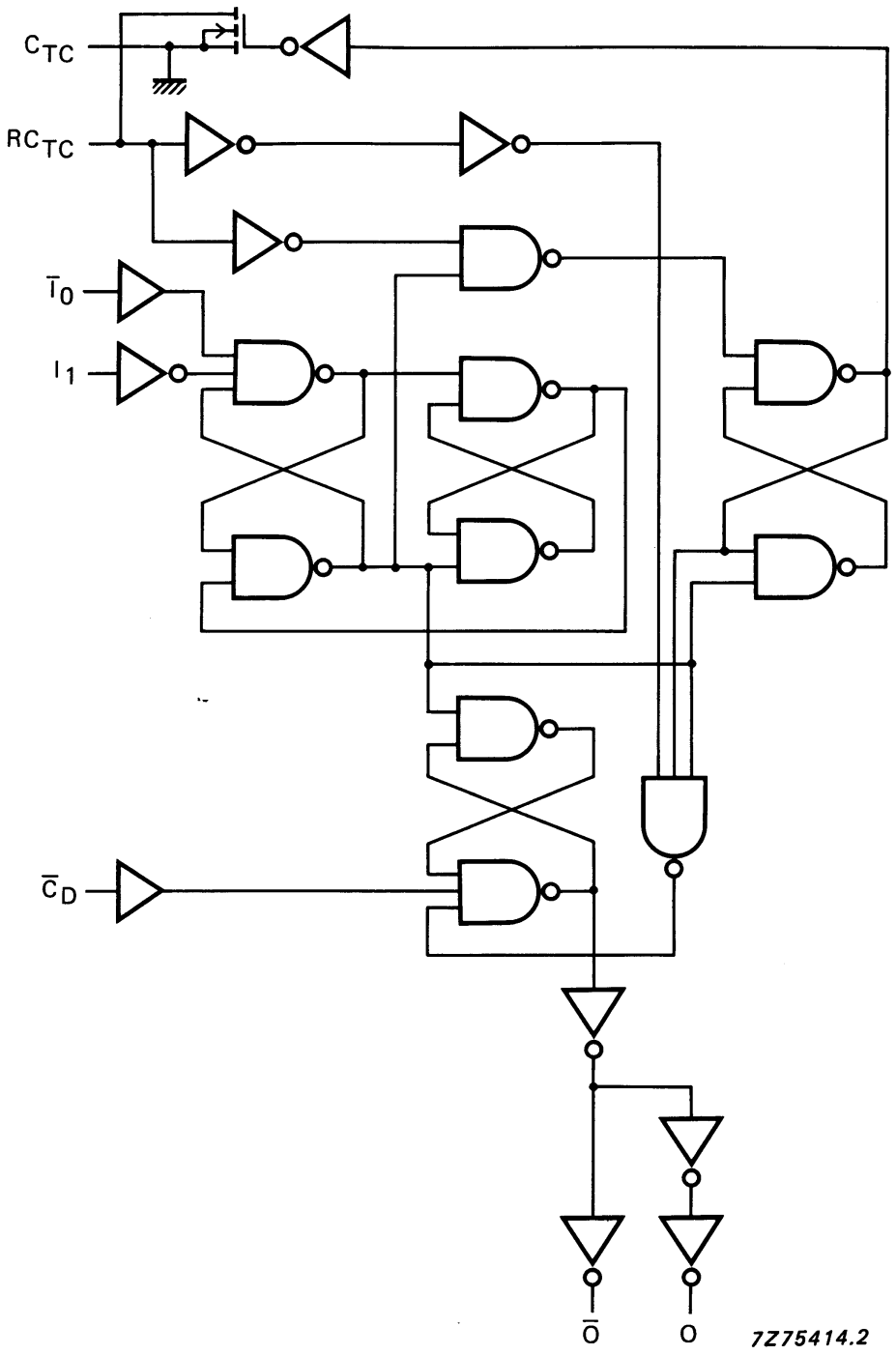

Fig.3 Logic diagram (one monostable multivibrator).

FUNCTION TABLE

INPUTS			OUTPUTS	
$\bar{I}_0$	I_1	$\overline{C}_D$	O	$\overline{O}$
↘	L	H	⎍	⎍
H	↗	H	⎍	⎍
X	X	L	L	H

Notes

1. H = HIGH state (the more positive voltage)
2. L = LOW state (the less positive voltage)
3. X = state is immaterial
4. ↗ = positive-going transition
5. ↘ = negative-going transition
6. ⎍ ⎍ = positive or negative output pulse; width is determined by C_t and R_t

AC CHARACTERISTICS

V_{SS} = 0 V; T_{amb} = 25 °C; C_L = 50 pF; input transition times ≤ 20 ns

	V_{DD} V	SYMBOL	MIN.	TYP.	MAX.		TYPICAL EXTRAPOLATION FORMULA
Propagation delays							
$\bar{I}_0$, $I_1 \rightarrow \overline{O}$	5			140	280	ns	113 ns + (0,55 ns/pF) C_L
HIGH to LOW	10	t_{PHL}		50	100	ns	39 ns + (0,23 ns/pF) C_L
	15			35	70	ns	27 ns + (0,16 ns/pF) C_L
$\bar{I}_0$, $I_1 \rightarrow$ O	5			155	305	ns	128 ns + (0,55 ns/pF) C_L
LOW to HIGH	10	t_{PLH}		60	115	ns	49 ns + (0,23 ns/pF) C_L
	15			40	80	ns	32 ns + (0,16 ns/pF) C_L
$\overline{C}_D \rightarrow$ O	5			105	210	ns	78 ns + (0,55 ns/pF) C_L
HIGH to LOW	10	t_{PHL}		40	85	ns	29 ns + (0,23 ns/pF) C_L
	15			30	60	ns	22 ns + (0,16 ns/pF) C_L
$\overline{C}_D \rightarrow \overline{O}$	5			120	240	ns	93 ns + (0,55 ns/pF) C_L
LOW to HIGH	10	t_{PLH}		50	105	ns	39 ns + (0,23 ns/pF) C_L
	15			35	70	ns	27 ns + (0,16 ns/pF) C_L
Output transition	5			60	120	ns	10 ns + (1,0 ns/pF) C_L
times	10	t_{THL}		30	60	ns	9 ns + (0,42 ns/pF) C_L
HIGH to LOW	15			20	40	ns	6 ns + (0,28 ns/pF) C_L
	5			60	120	ns	10 ns + (1,0 ns/pF) C_L
LOW to HIGH	10	t_{TLH}		30	60	ns	9 ns + (0,42 ns/pF) C_L
	15			20	40	ns	6 ns + (0,28 ns/pF) C_L

AC CHARACTERISTICS

V_{SS} = 0 V; T_{amb} = 25 °C; input transition times ≤ 20 ns; R_t = 5 kΩ; C_t = 15 pF

	V_{DD} V	TYPICAL FORMULA FOR P (μW)	
Dynamic power dissipation per package (P)	5	$4000\ f_i + \sum (f_o C_L) \times V_{DD}^2$	where f_i = input freq. (MHz) f_o = output freq. (MHz) C_L = load capacitance (pF) $\sum (f_o C_L)$ = sum of outputs V_{DD} = supply voltage (V)
	10	$20\ 000\ f_i + \sum (f_o C_L) \times V_{DD}^2$	
	15	$59\ 000\ f_i + \sum (f_o C_L) \times V_{DD}^2$	

AC CHARACTERISTICS

V_{SS} = 0 V; T_{amb} = 25 °C; C_L = 50 pF; input transition times ≤ 20 ns; see also waveforms Fig.5.

	V_{DD} V	SYMBOL	MIN.	TYP.	MAX.		
Recovery time for $\overline{C}_D$	5	t_{RCD}	0	–75		ns	
	10		0	–30		ns	
	15		0	–25		ns	
Minimum $\bar{I}_0$ pulse width; LOW	5	t_{WI0L}	50	25		ns	
	10		30	15		ns	
	15		20	10		ns	
Minimum I_1 pulse width; HIGH	5	t_{WI1H}	50	25		ns	
	10		30	15		ns	
	15		20	10		ns	
Minimum $\overline{C}_D$ pulse width; LOW	5	t_{WCDL}	60	30		ns	
	10		35	15		ns	
	15		25	10		ns	
Set-up time $\overline{C}_D \rightarrow \bar{I}_0$ or I_1	5	t_{su}	0	–105		ns	to avoid change in output
	10		0	–40		ns	
	15		0	–25		ns	
Output O pulse width; HIGH	5	t_{WOH}	–	235		ns	
	10		–	155		ns	note 1
	15		–	140		ns	
Output O pulse width; HIGH	5	t_{WOH}	–	5,45		μs	
	10		–	4,95		μs	note 2
	15		–	4,85		μs	
Change in output O pulse width over temperature	5	Δt_{WO}	–	±3		%	
	10		–	±2		%	note 3
	15		–	±2		%	
Change in output O pulse width over V_{DD}	5	Δt_{WO}	–	±2		%	
	10		–	±1		%	V_{DD} ± 5%
	15		–	±1		%	

	V_{DD} V	SYMBOL	MIN.	TYP.	MAX.		
External timing resistor	5	R_t	5	–	2000	kΩ	
	10		5	–	2000	kΩ	
	15		5	–	2000	kΩ	
External timing capacitor	5	C_t	no limits				
	10		no limits				
	15		no limits				

Notes

1. R_t = 5 kΩ; C_t = 15 pF; for other R_t, C_t combinations and C_t < 0,01 μF see graph Fig.4.
2. R_t = 10 kΩ; C_t = 1000 pF; for other R_t, C_t combinations and C_t > 0,01 μF use formula $t_{WO} = K.R_t.C_t$.
   where: t_{WO} = output pulse width (s)
   R_t = external timing resistor (Ω)
   C_t = external timing capacitor (F)
   K = 0,42 for V_{DD} = 5 V
   K = 0,32 for V_{DD} = 10 V
   K = 0,30 for V_{DD} = 15 V
3. T_{amb} = −40 to +85 °C; Δt_{WO} is referenced to t_{WO} at T_{amb} = 25 °C.

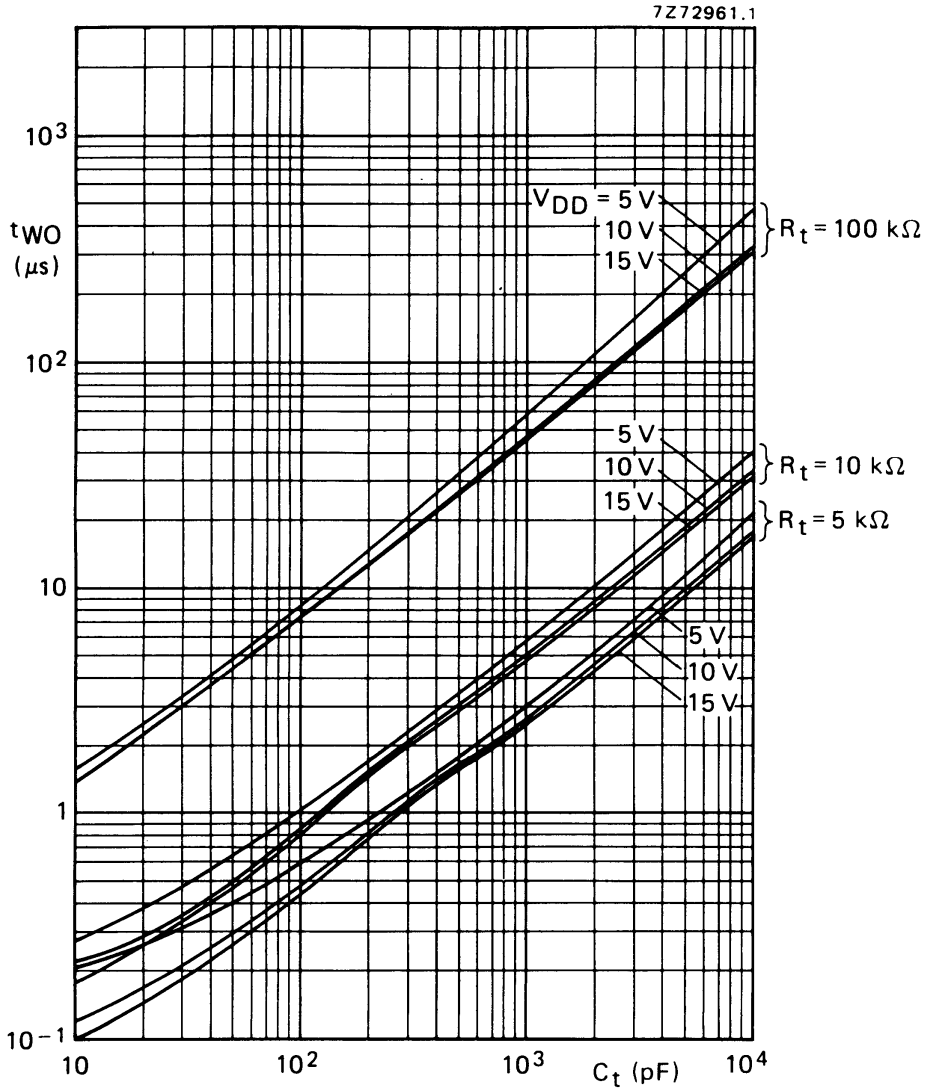

Fig.4 Output pulse width (t_{WO}) as a function of external timing capacitor (C_t).

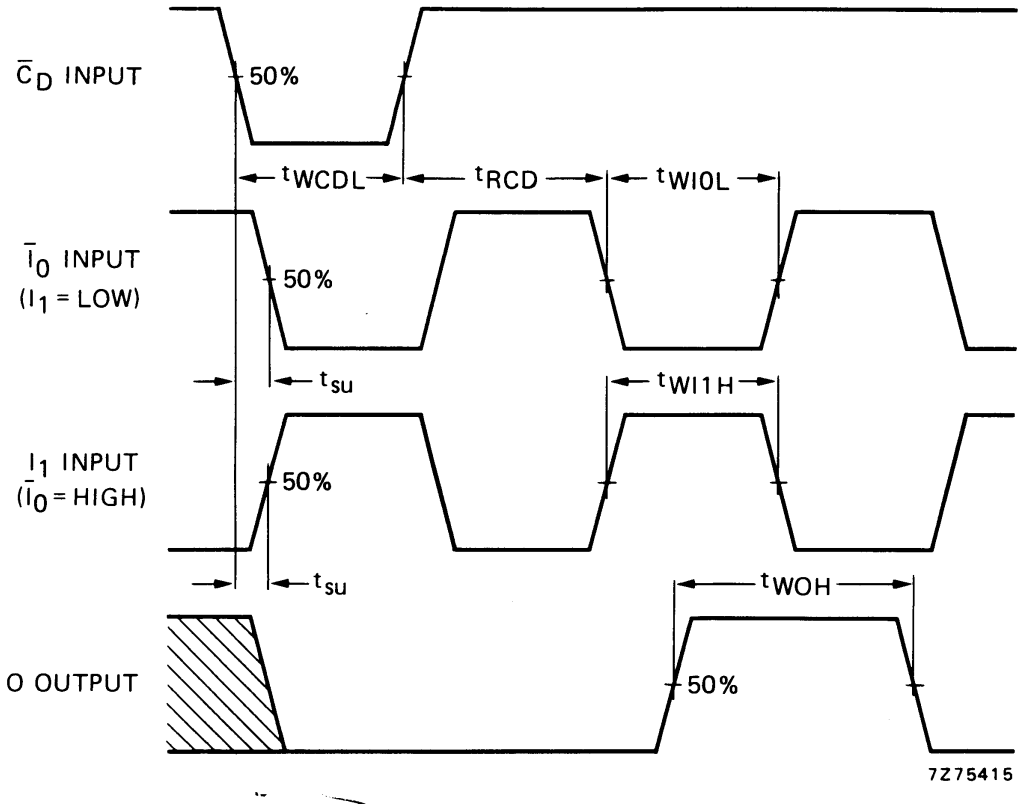

Fig.5 Waveforms showing minimum $\overline{I}_0$, I_1 and O pulse widths, set-up and recovery times. Set-up and recovery times are shown as positive values but may be specified as negative values.

APPLICATION INFORMATION

An example of an application for the HEF4528B is:

- Non-retriggerable monostable multivibrator

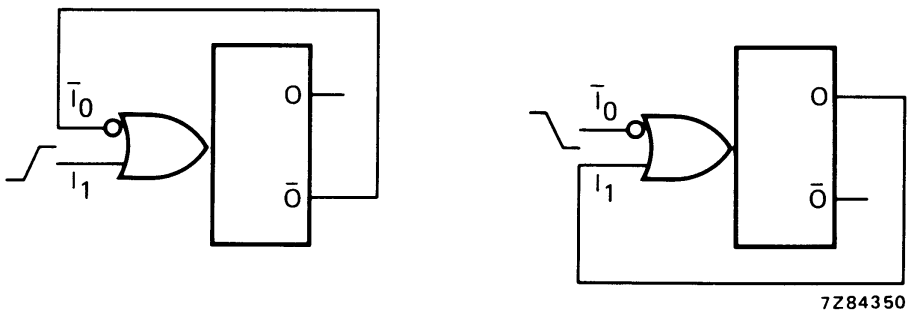

Fig.6 Two examples for a non-retriggerable monostable multivibrator using half of HEF4528B (LOW to HIGH and HIGH to LOW triggered).

This datasheet has been download from:

www.datasheetcatalog.com

Datasheets for electronics components.

ENTEGRECİ

Bu belge www.entegreci.com üzerinden sunulmaktadır.

Elektronik komponent tedarikinde Entegreci

Entegreci, Eskişehir merkezli, Türkiye geneline satış yapan bir elektronik komponent mağazasıdır. Entegreler (IC), mikrodenetleyiciler, transistörler, diyotlar, pasif elemanlar, konnektörler, modüller ve geliştirme kartları tek adetten seri üretim adetlerine kadar satılır. Ürün sayfalarında güncel stok durumunu, fiyatı ve datasheet bağlantısını bulabilirsiniz.

Parça koduyla arama

Üretici parça numarasını yazın; stok ve fiyatı hemen görün.

www.entegreci.com

Ürün kategorileri

Entegreden kapasitöre tüm elektronik komponent kategorileri.

Kategorilere göz atın

Üreticiler

Aradığınız üreticinin ürünlerini tek sayfada inceleyin.

Üreticileri görün

Toplu alım ve teklif

Listede olmayan ya da yüksek adetli parçalar için teklif isteyin.

Teklif isteyin

www.entegreci.com | **destek@entegreci.com** | **0850 305 90 34**

Entegreci is an online electronic components store based in Türkiye. Search by manufacturer part number to see stock, prices and datasheets for integrated circuits, microcontrollers, transistors, passive components and connectors, or request a quote for parts that are not listed.

Bu sayfa Entegreci tarafından eklenmiştir. Belgenin önceki sayfaları asıl yayıncısına aittir ve içeriği değiştirilmemiştir; en güncel sürüm için belgenin yayıncısına başvurun.