HEF4060B

14-stage ripple-carry binary counter/divider and oscillator

Rev. 7 — 16 November 2011 Product data sheet

1. General description

The HEF4060B is a 14-stage ripple-carry binary counter/divider and oscillator with three oscillator terminals (RS, REXT and CEXT), ten buffered outputs (Q3 to Q9 and Q11 to Q13) and an overriding asynchronous master reset input (MR).

The oscillator configuration allows design of either RC or crystal oscillator circuits. The oscillator may be replaced by an external clock signal at input RS. The clock input's Schmitt-trigger action makes it highly tolerant to slower clock rise and fall times. The counter advances on the negative-going transition of RS. A HIGH level on MR resets the counter (Q3 to Q9 and Q11 to Q13 = LOW), independent of other input conditions.

It operates over a recommended V_{DD} power supply range of 3 V to 15 V referenced to V_{SS} (usually ground). Unused inputs must be connected to V_{DD}, V_{SS}, or another input.

2. Features and benefits

- Tolerant of slow clock rise and fall times
- Fully static operation
- 5 V, 10 V, and 15 V parametric ratings
- Standardized symmetrical output characteristics
- Inputs and outputs are protected against electrostatic effects
- Specified from −40 °C to +85 °C
- Complies with JEDEC standard JESD 13-B

3. Ordering information

Table 1. Ordering information

All types operate from −40 °C to +85 °C.

Type number	Package		
	Name	Description	Version
HEF4060BP	DIP16	plastic dual in-line package; 16 leads (300 mil)	SOT38-4
HEF4060BT	SO16	plastic small outline package; 16 leads; body width 3.9 mm	SOT109-1

4. Functional diagram

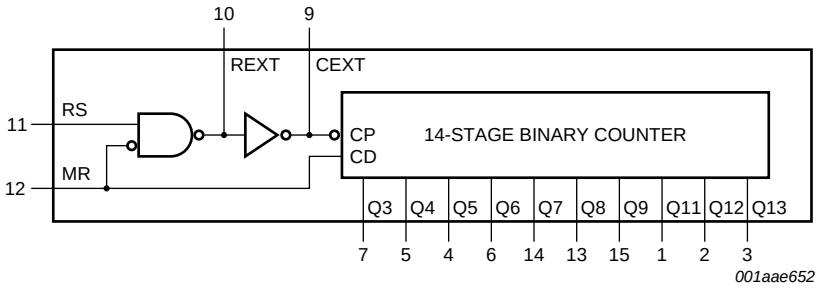

Fig 1. Functional diagram

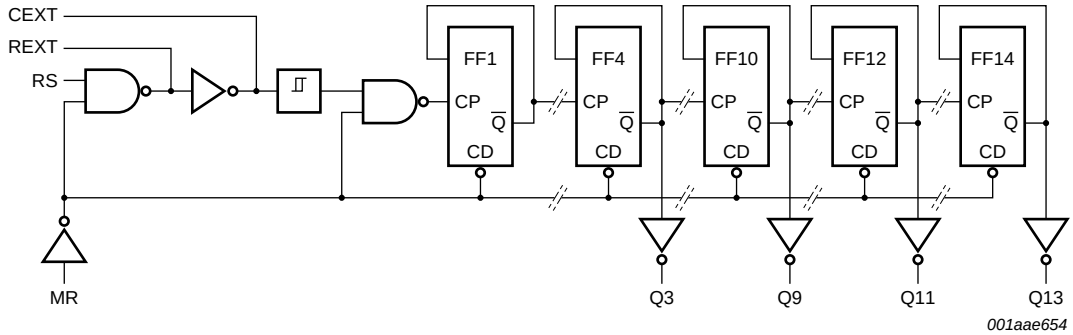

Fig 2. Logic diagram

5. Pinning information

5.1 Pinning

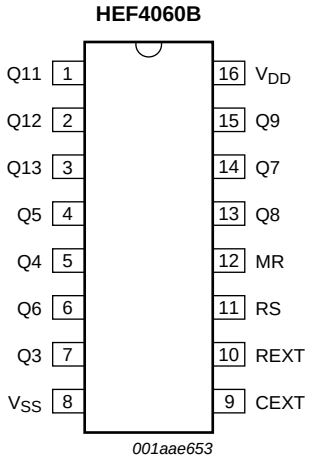

Fig 3. Pin configuration

All information provided in this document is subject to legal disclaimers.

© NXP B.V. 2011. All rights reserved.

5.2 Pin description

Table 2. Pin description

Symbol	Pin	Description
Q11 to Q13	1, 2, 3	counter output
Q3 to Q9	7, 5, 4, 6, 14, 13, 15	counter output
V_{SS}	8	ground supply voltage
CEXT	9	external capacitor connection
REXT	10	oscillator pin
RS	11	clock input/oscillator pin
MR	12	master reset
V_{DD}	16	supply voltage

6. Functional description

Table 3. Function table[1]

Input		Output
RS	**MR**	**Q3 to Q9 and Q11 to Q13**
↑	L	no change
↓	L	count
X	H	L

[1] H = HIGH voltage level; L = LOW voltage level; ↑ = LOW-to-HIGH clock transition; ↓ HIGH-to-LOW clock transition.

7. Limiting values

Table 4. Limiting values

In accordance with the Absolute Maximum Rating System (IEC 60134).

Symbol	Parameter	Conditions		Min	Max	Unit
V_{DD}	supply voltage			−0.5	+18	V
I_{IK}	input clamping current	$V_I < -0.5$ V or $V_I > V_{DD} + 0.5$ V		-	±10	mA
V_I	input voltage			−0.5	$V_{DD} + 0.5$	V
I_{OK}	output clamping current	$V_O < -0.5$ V or $V_O > V_{DD} + 0.5$ V		-	±10	mA
$I_{I/O}$	input/output current			-	±10	mA
I_{DD}	supply current			-	50	mA
T_{stg}	storage temperature			−65	+150	°C
T_{amb}	ambient temperature			−40	+85	°C
P_{tot}	total power dissipation	T_{amb} −40 °C to +85 °C				
		DIP16 package	[1]	-	750	mW
		SO16 package	[2]	-	500	mW
P	power dissipation	per output		-	100	mW

[1] For DIP16 package: P_{tot} derates linearly with 12 mW/K above 70 °C.

[2] For SO16 package: P_{tot} derates linearly with 8 mW/K above 70 °C.

All information provided in this document is subject to legal disclaimers.

© NXP B.V. 2011. All rights reserved.

8. Recommended operating conditions

Table 5. Recommended operating conditions

Symbol	Parameter	Conditions	Min	Typ	Max	Unit
V_{DD}	supply voltage		3	-	15	V
V_I	input voltage		0	-	V_{DD}	V
T_{amb}	ambient temperature	in free air	–40	-	+85	°C
$\Delta t/\Delta V$	input transition rise and fall rate	input MR				
		V_{DD} = 5 V	-	-	3.75	μs/V
		V_{DD} = 10 V	-	-	0.5	μs/V
		V_{DD} = 15 V	-	-	0.08	μs/V

9. Static characteristics

Table 6. Static characteristics

V_{SS} = 0 V; V_I = V_{SS} or V_{DD} unless otherwise specified.

Symbol	Parameter	Conditions	V_{DD}	T_{amb} = –40 °C		T_{amb} = 25 °C		T_{amb} = 85 °C		Unit
				Min	Max	Min	Max	Min	Max	
V_{IH}	HIGH-level input voltage	$\|I_O\|$ < 1 μA	5 V	3.5	-	3.5	-	3.5	-	V
			10 V	7.0	-	7.0	-	7.0	-	V
			15 V	11.0	-	11.0	-	11.0	-	V
V_{IL}	LOW-level input voltage	$\|I_O\|$ < 1 μA	5 V	-	1.5	-	1.5	-	1.5	V
			10 V	-	3.0	-	3.0	-	3.0	V
			15 V	-	4.0	-	4.0	-	4.0	V
V_{OH}	HIGH-level output voltage	$\|I_O\|$ < 1 μA	5 V	4.95	-	4.95	-	4.95	-	V
			10 V	9.95	-	9.95	-	9.95	-	V
			15 V	14.95	-	14.95	-	14.95	-	V
V_{OL}	LOW-level output voltage	$\|I_O\|$ < 1 μA	5 V	-	0.05	-	0.05	-	0.05	V
			10 V	-	0.05	-	0.05	-	0.05	V
			15 V	-	0.05	-	0.05	-	0.05	V
I_{OH}	HIGH-level output current	V_O = 2.5 V	5 V	-	–1.7	-	–1.4	-	–1.1	mA
		V_O = 4.6 V	5 V	-	–0.52	-	–0.44	-	–0.36	mA
		V_O = 9.5 V	10 V	-	–1.3	-	–1.1	-	–0.9	mA
		V_O = 13.5 V	15 V	-	–3.6	-	–3.0	-	–2.4	mA
I_{OL}	LOW-level output current	V_O = 0.4 V	5 V	0.52	-	0.44	-	0.36	-	mA
		V_O = 0.5 V	10 V	1.3	-	1.1	-	0.9	-	mA
		V_O = 1.5 V	15 V	3.6	-	3.0	-	2.4	-	mA
I_I	input leakage current		15 V	-	±0.3	-	±0.3	-	±1.0	μA
I_{DD}	supply current	I_O = 0 A	5 V	-	20	-	20	-	150	μA
			10 V	-	40	-	40	-	300	μA
			15 V	-	80	-	80	-	600	μA
C_I	input capacitance		-	-	-	-	7.5	-	-	pF

All information provided in this document is subject to legal disclaimers.

© NXP B.V. 2011. All rights reserved.

10. Dynamic characteristics

Table 7. Dynamic characteristics

T_{amb} = 25 °C; V_{SS} = 0 V; C_L = 50 pF; $t_r = t_f \leq 20$ ns; unless otherwise specified.

Symbol	Parameter	Conditions	V_{DD}		Extrapolation formula[1]	Min	Typ	Max	Unit
t_{pd}	propagation delay	RS → Q3; see Figure 4	5 V	[2]	183 ns + (0.55 ns/pF) C_L	-	210	420	ns
			10 V		69 ns + (0.23 ns/pF) C_L	-	80	160	ns
			15 V		42 ns + (0.16 ns/pF) C_L	-	50	100	ns
		Qn → Qn + 1; see Figure 4	5 V		-	-	25	50	ns
			10 V		-	-	10	20	ns
			15 V		-	-	6	12	ns
		MR → Qn; HIGH to LOW see Figure 4	5 V		73 ns + (0.55 ns/pF) C_L	-	100	200	ns
			10 V		29 ns + (0.23 ns/pF) C_L	-	40	80	ns
			15 V		22 ns + (0.16 ns/pF) C_L	-	30	60	ns
t_t	transition time	see Figure 4	5 V	[3]	10 ns + (1.00 ns/pF) C_L	-	60	120	ns
			10 V		9 ns + (0.42 ns/pF) C_L	-	30	60	ns
			15 V		6 ns + (0.28 ns/pF) C_L	-	20	40	ns
t_W	pulse width	minimum width; RS HIGH; see Figure 4	5 V			120	60	-	ns
			10 V			50	25	-	ns
			15 V			30	15	-	ns
		minimum width; MR HIGH; see Figure 4	5 V			50	25	-	ns
			10 V			30	15	-	ns
			15 V			20	10	-	ns
t_{rec}	recovery time	input MR; see Figure 4	5 V			160	80	-	ns
			10 V			80	40	-	ns
			15 V			60	30	-	ns
f_{max}	maximum frequency	input RS; see Figure 4	5 V			4	8	-	MHz
			10 V			10	20	-	MHz
			15 V			15	30	-	MHz

[1] The typical values of the propagation delay and transition times are calculated from the extrapolation formulas shown (C_L in pF).

[2] t_{pd} is the same as t_{PHL} and t_{PLH}.

[3] t_t is the same as t_{THL} and t_{TLH}.

All information provided in this document is subject to legal disclaimers.

© NXP B.V. 2011. All rights reserved.

Table 8. Power dissipation

Dynamic power dissipation P_D and total power dissipation P_{tot} can be calculated from the formulas shown. T_{amb} = 25 °C.

Symbol	Parameter	Conditions	V_{DD}	Typical formula for P_D and P_{tot} (µW)[1]
P_D	dynamic power dissipation	per device	5 V	$P_D = 700 \times f_i + \Sigma(f_o \times C_L) \times V_{DD}^2$
			10 V	$P_D = 3300 \times f_i + \Sigma(f_o \times C_L) \times V_{DD}^2$
			15 V	$P_D = 8900 \times f_i + \Sigma(f_o \times C_L) \times V_{DD}^2$
P_{tot}	total power dissipation	when using the on-chip oscillator	5 V	$P_{tot} = 700 \times f_{osc} + \Sigma(f_o \times C_L) \times V_{DD}^2 + 2 \times C_t \times V_{DD}^2 \times f_{osc} + 690 \times V_{DD}$
			10 V	$P_{tot} = 3300 \times f_{osc} + \Sigma(f_o \times C_L) \times V_{DD}^2 + 2 \times C_t \times V_{DD}^2 \times f_{osc} + 6900 \times V_{DD}$
			15 V	$P_{tot} = 8900 \times f_{osc} + \Sigma(f_o \times C_L) \times V_{DD}^2 + 2 \times C_t \times V_{DD}^2 \times f_{osc} + 22000 \times V_{DD}$

[1] Where:

f_i = input frequency in MHz; f_o = output frequency in MHz;

C_L = output load capacitance in pF;

V_{DD} = supply voltage in V;

$\Sigma(f_o \times C_L)$ = sum of the outputs;

C_t = timing capacitance (pF);

f_{osc} = oscillator frequency (MHz).

11. Waveforms

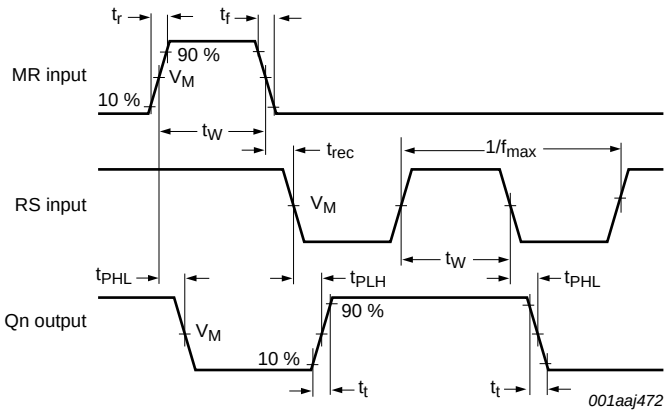

Measurement points are given in Table 9.

Fig 4. Waveforms showing propagation delays for MR to Qn and $\overline{CP}$ to Q0, minimum MR, and $\overline{CP}$ pulse widths

Table 9. Measurement points

Supply voltage	Input	Output
V_{DD}	V_M	V_M
5 V to 15 V	$0.5V_{DD}$	$0.5V_{DD}$

All information provided in this document is subject to legal disclaimers.

© NXP B.V. 2011. All rights reserved.

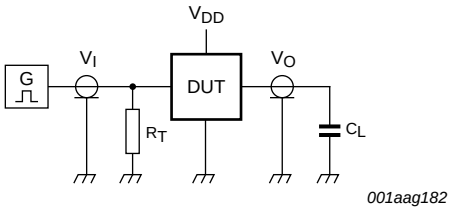

Test data is given in Table 10.

Definitions for test circuit:

DUT = Device Under Test;

C_L = load capacitance including jig and probe capacitance;

R_T = termination resistance should be equal to the output impedance Z_o of the pulse generator.

Fig 5. Test circuit for switching times

Table 10. Measurement point and test data

Supply voltage	Input		Load
V_{DD}	V_I	t_r, t_f	C_L
5 V to 15 V	V_{SS} or V_{DD}	≤ 20 ns	50 pF

12. RC oscillator

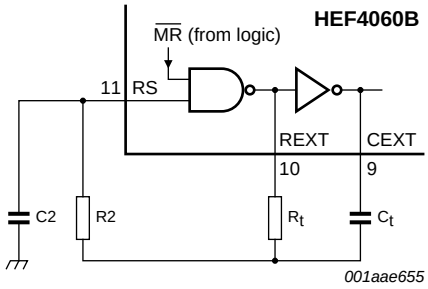

Typical formula for oscillator frequency: $f_{osc} = \frac{1}{2.3 \times R_t \times C_t}$

Fig 6. External component connection for RC oscillator

12.1 Timing component limitations

The oscillator frequency is mainly determined by $R_t \times C_t$, provided R_t << R2 and R2 × C2 << $R_t \times C_t$. The influence of the forward voltage across the input protection diodes on the frequency is minimized by R2. The stray capacitance C2 should be kept as small as possible. In consideration of accuracy, C_t must be larger than the inherent stray capacitance. R_t must be larger than the LOCMOS (Local Oxidation Complementary Metal-Oxide Semiconductor) 'ON' resistance in series with it, which typically is 500 Ω at V_{DD} = 5 V, 300 Ω at V_{DD} = 10 V and 200 Ω at V_{DD} = 15 V.

All information provided in this document is subject to legal disclaimers.

© NXP B.V. 2011. All rights reserved.

The recommended values for these components to maintain agreement with the typical oscillation formula are:

$C_t \geq 100$ pF, up to any practical value,

$10\ k\Omega \leq R_t \leq 1\ M\Omega$.

12.2 Typical crystal oscillator circuit

In Figure 7, R2 is the power limiting resistor. For starting and maintaining oscillation a minimum transconductance is necessary.

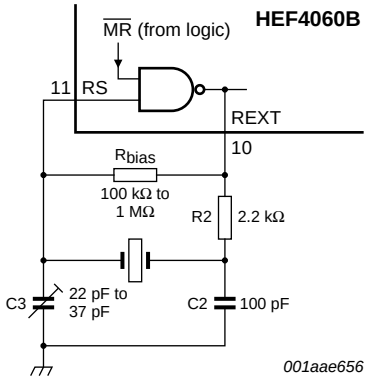

Fig 7. External component connection for crystal oscillator

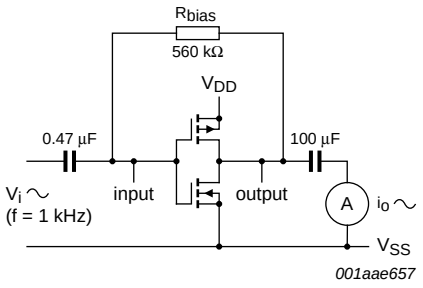

$g_{fs} = di_o/dv_i$ at v_o is constant (see also Figure 9); MR = LOW.

Fig 8. Test setup for measuring forward transconductance (g_{fs})

All information provided in this document is subject to legal disclaimers.

© NXP B.V. 2011. All rights reserved.

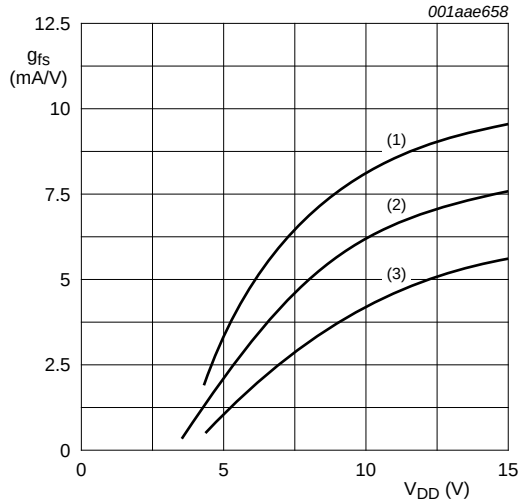

T_{amb} = 25 °C.

(1) Average + 2 σ.

(2) Average.

(3) Average − 2 σ.

Where 'σ' is the observed standard deviation.

Fig 9. Typical forward transconductance g_{fs} as a function of the supply voltage

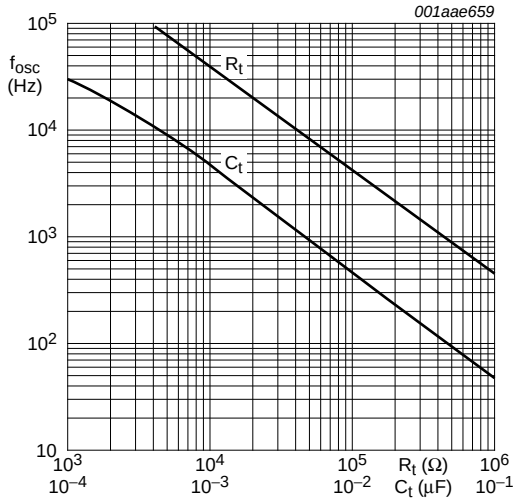

C_t curve at R_t = 100 kΩ; R2 = 470 kΩ.

R_t curve at C_t = 1 nF; R2 = 5 R_t.

V_{DD} = 5 V to 15 V; T_{amb} = 25 °C.

Fig 10. RC oscillator frequency as a function of R_t and C_t

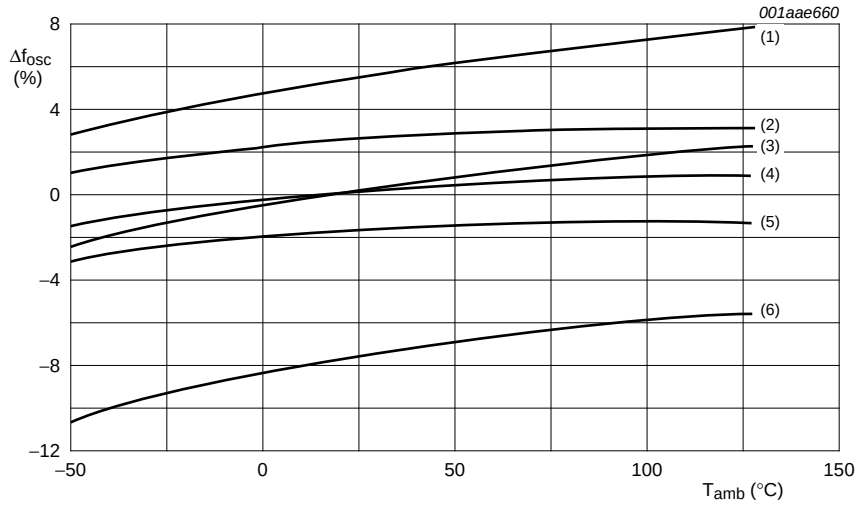

Lines (1) and (2): V_{DD} = 15 V.

Lines (3) and (4): V_{DD} = 10 V.

Lines (5) and (6): V_{DD} = 5 V.

Lines (1), (3), (6): R_t = 100 kΩ; C_t = 1 nF; R2 = 0 W.

Lines (2), (4), (5): R_t = 100 kΩ; C_t = 1 nF; R2 = 300 kΩ.

Referenced at: f_{osc} at T_{amb} = 25 °C and V_{DD} = 10 V.

Fig 11. Oscillator frequency deviation (Δf_{osc}) as a function of ambient temperature

All information provided in this document is subject to legal disclaimers.

© NXP B.V. 2011. All rights reserved.

13. Package outline

DIP16: plastic dual in-line package; 16 leads (300 mil) **SOT38-4**

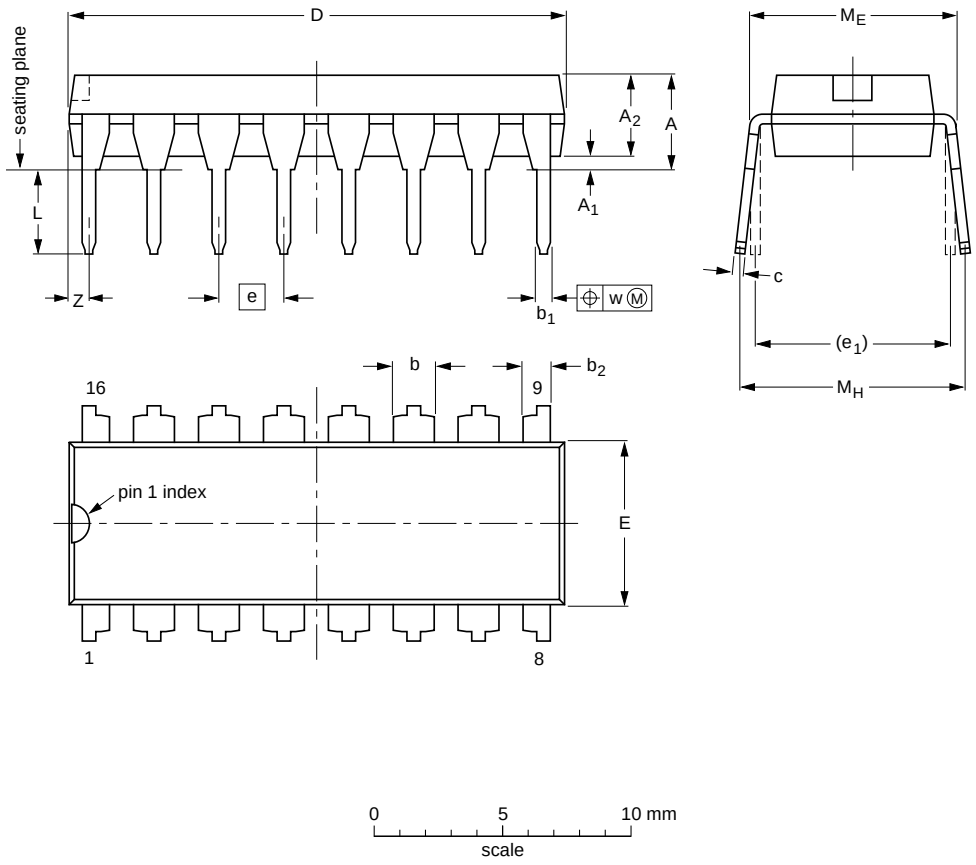

DIMENSIONS (inch dimensions are derived from the original mm dimensions)

UNIT	A max.	A_1 min.	A_2 max.	b	b_1	b_2	c	D (1)	E (1)	e	e_1	L	M_E	M_H	w	Z (1) max.
mm	4.2	0.51	3.2	1.73 1.30	0.53 0.38	1.25 0.85	0.36 0.23	19.50 18.55	6.48 6.20	2.54	7.62	3.60 3.05	8.25 7.80	10.0 8.3	0.254	0.76
inches	0.17	0.02	0.13	0.068 0.051	0.021 0.015	0.049 0.033	0.014 0.009	0.77 0.73	0.26 0.24	0.1	0.3	0.14 0.12	0.32 0.31	0.39 0.33	0.01	0.03

Note

1. Plastic or metal protrusions of 0.25 mm (0.01 inch) maximum per side are not included.

OUTLINE VERSION	REFERENCES				EUROPEAN PROJECTION	ISSUE DATE
	IEC	JEDEC	JEITA			
SOT38-4						~~95-01-14~~ 03-02-13

Fig 12. Package outline SOT38-4 (DIP16)

All information provided in this document is subject to legal disclaimers.

© NXP B.V. 2011. All rights reserved.

SO16: plastic small outline package; 16 leads; body width 3.9 mm **SOT109-1**

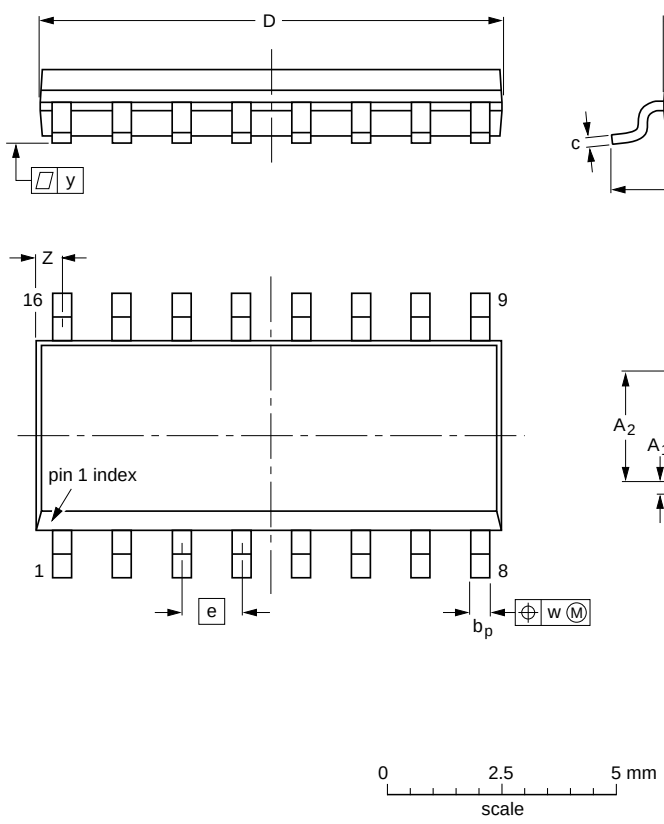

DIMENSIONS (inch dimensions are derived from the original mm dimensions)

UNIT	A max.	A_1	A_2	A_3	b_p	c	$D^{(1)}$	$E^{(1)}$	e	H_E	L	L_p	Q	v	w	y	$Z^{(1)}$	θ
mm	1.75	0.25 0.10	1.45 1.25	0.25	0.49 0.36	0.25 0.19	10.0 9.8	4.0 3.8	1.27	6.2 5.8	1.05	1.0 0.4	0.7 0.6	0.25	0.25	0.1	0.7 0.3	8° 0°
inches	0.069	0.010 0.004	0.057 0.049	0.01	0.019 0.014	0.0100 0.0075	0.39 0.38	0.16 0.15	0.05	0.244 0.228	0.041	0.039 0.016	0.028 0.020	0.01	0.01	0.004	0.028 0.012	

Note

1. Plastic or metal protrusions of 0.15 mm (0.006 inch) maximum per side are not included.

OUTLINE VERSION	REFERENCES				EUROPEAN PROJECTION	ISSUE DATE
	IEC	JEDEC	JEITA			
SOT109-1	076E07	MS-012				~~99-12-27~~ 03-02-19

Fig 13. Package outline SOT109-1 (SO16)

All information provided in this document is subject to legal disclaimers.

© NXP B.V. 2011. All rights reserved.

14. Revision history

Table 11. Revision history

Document ID	Release date	Data sheet status	Change notice	Supersedes
HEF4060B v.7	20111116	Product data sheet	-	HEF4060B v.6
Modifications:	• Legal pages updated. • Changes in “General description” and “Features and benefits”. • Section “Applications” removed.			
HEF4060B v.6	20110511	Product data sheet	-	HEF4060B v.5
HEF4060B v.5	20091127	Product data sheet	-	HEF4060B v.4
HEF4060B v.4	20090817	Product data sheet	-	HEF4060B_CNV v.3
HEF4060B_CNV v.3	19950101	Product specification	-	HEF4060B_CNV v.2
HEF4060B_CNV v.2	19950101	Product specification	-	-

All information provided in this document is subject to legal disclaimers.

© NXP B.V. 2011. All rights reserved.

15. Legal information

15.1 Data sheet status

Document status[1][2]	Product status[3]	Definition
Objective [short] data sheet	Development	This document contains data from the objective specification for product development.
Preliminary [short] data sheet	Qualification	This document contains data from the preliminary specification.
Product [short] data sheet	Production	This document contains the product specification.

[1] Please consult the most recently issued document before initiating or completing a design.

[2] The term 'short data sheet' is explained in section "Definitions".

[3] The product status of device(s) described in this document may have changed since this document was published and may differ in case of multiple devices. The latest product status information is available on the Internet at URL http://www.nxp.com.

15.2 Definitions

Draft — The document is a draft version only. The content is still under internal review and subject to formal approval, which may result in modifications or additions. NXP Semiconductors does not give any representations or warranties as to the accuracy or completeness of information included herein and shall have no liability for the consequences of use of such information.

Short data sheet — A short data sheet is an extract from a full data sheet with the same product type number(s) and title. A short data sheet is intended for quick reference only and should not be relied upon to contain detailed and full information. For detailed and full information see the relevant full data sheet, which is available on request via the local NXP Semiconductors sales office. In case of any inconsistency or conflict with the short data sheet, the full data sheet shall prevail.

Product specification — The information and data provided in a Product data sheet shall define the specification of the product as agreed between NXP Semiconductors and its customer, unless NXP Semiconductors and customer have explicitly agreed otherwise in writing. In no event however, shall an agreement be valid in which the NXP Semiconductors product is deemed to offer functions and qualities beyond those described in the Product data sheet.

15.3 Disclaimers

Limited warranty and liability — Information in this document is believed to be accurate and reliable. However, NXP Semiconductors does not give any representations or warranties, expressed or implied, as to the accuracy or completeness of such information and shall have no liability for the consequences of use of such information.

In no event shall NXP Semiconductors be liable for any indirect, incidental, punitive, special or consequential damages (including - without limitation - lost profits, lost savings, business interruption, costs related to the removal or replacement of any products or rework charges) whether or not such damages are based on tort (including negligence), warranty, breach of contract or any other legal theory.

Notwithstanding any damages that customer might incur for any reason whatsoever, NXP Semiconductors' aggregate and cumulative liability towards customer for the products described herein shall be limited in accordance with the *Terms and conditions of commercial sale* of NXP Semiconductors.

Right to make changes — NXP Semiconductors reserves the right to make changes to information published in this document, including without limitation specifications and product descriptions, at any time and without notice. This document supersedes and replaces all information supplied prior to the publication hereof.

Suitability for use — NXP Semiconductors products are not designed, authorized or warranted to be suitable for use in life support, life-critical or safety-critical systems or equipment, nor in applications where failure or malfunction of an NXP Semiconductors product can reasonably be expected to result in personal injury, death or severe property or environmental damage. NXP Semiconductors accepts no liability for inclusion and/or use of NXP Semiconductors products in such equipment or applications and therefore such inclusion and/or use is at the customer's own risk.

Applications — Applications that are described herein for any of these products are for illustrative purposes only. NXP Semiconductors makes no representation or warranty that such applications will be suitable for the specified use without further testing or modification.

Customers are responsible for the design and operation of their applications and products using NXP Semiconductors products, and NXP Semiconductors accepts no liability for any assistance with applications or customer product design. It is customer's sole responsibility to determine whether the NXP Semiconductors product is suitable and fit for the customer's applications and products planned, as well as for the planned application and use of customer's third party customer(s). Customers should provide appropriate design and operating safeguards to minimize the risks associated with their applications and products.

NXP Semiconductors does not accept any liability related to any default, damage, costs or problem which is based on any weakness or default in the customer's applications or products, or the application or use by customer's third party customer(s). Customer is responsible for doing all necessary testing for the customer's applications and products using NXP Semiconductors products in order to avoid a default of the applications and the products or of the application or use by customer's third party customer(s). NXP does not accept any liability in this respect.

Limiting values — Stress above one or more limiting values (as defined in the Absolute Maximum Ratings System of IEC 60134) will cause permanent damage to the device. Limiting values are stress ratings only and (proper) operation of the device at these or any other conditions above those given in the Recommended operating conditions section (if present) or the Characteristics sections of this document is not warranted. Constant or repeated exposure to limiting values will permanently and irreversibly affect the quality and reliability of the device.

Terms and conditions of commercial sale — NXP Semiconductors products are sold subject to the general terms and conditions of commercial sale, as published at http://www.nxp.com/profile/terms, unless otherwise agreed in a valid written individual agreement. In case an individual agreement is concluded only the terms and conditions of the respective agreement shall apply. NXP Semiconductors hereby expressly objects to applying the customer's general terms and conditions with regard to the purchase of NXP Semiconductors products by customer.

No offer to sell or license — Nothing in this document may be interpreted or construed as an offer to sell products that is open for acceptance or the grant, conveyance or implication of any license under any copyrights, patents or other industrial or intellectual property rights.

Export control — This document as well as the item(s) described herein may be subject to export control regulations. Export might require a prior authorization from competent authorities.

All information provided in this document is subject to legal disclaimers.

© NXP B.V. 2011. All rights reserved.

Non-automotive qualified products — Unless this data sheet expressly states that this specific NXP Semiconductors product is automotive qualified, the product is not suitable for automotive use. It is neither qualified nor tested in accordance with automotive testing or application requirements. NXP Semiconductors accepts no liability for inclusion and/or use of non-automotive qualified products in automotive equipment or applications.

In the event that customer uses the product for design-in and use in automotive applications to automotive specifications and standards, customer (a) shall use the product without NXP Semiconductors' warranty of the product for such automotive applications, use and specifications, and (b) whenever customer uses the product for automotive applications beyond NXP Semiconductors' specifications such use shall be solely at customer's own risk, and (c) customer fully indemnifies NXP Semiconductors for any liability, damages or failed product claims resulting from customer design and use of the product for automotive applications beyond NXP Semiconductors' standard warranty and NXP Semiconductors' product specifications.

15.4 Trademarks

Notice: All referenced brands, product names, service names and trademarks are the property of their respective owners.

16. Contact information

For more information, please visit: **http://www.nxp.com**

For sales office addresses, please send an email to: **salesaddresses@nxp.com**

All information provided in this document is subject to legal disclaimers.

© NXP B.V. 2011. All rights reserved.

17. Contents

1 General description 1
2 Features and benefits 1
3 Ordering information 1
4 Functional diagram 2
5 Pinning information 2
5.1 Pinning 2
5.2 Pin description 3
6 Functional description 3
7 Limiting values 3
8 Recommended operating conditions 4
9 Static characteristics 4
10 Dynamic characteristics 5
11 Waveforms 6
12 RC oscillator 7
12.1 Timing component limitations 7
12.2 Typical crystal oscillator circuit 8
13 Package outline 10
14 Revision history 12
15 Legal information 13
15.1 Data sheet status 13
15.2 Definitions 13
15.3 Disclaimers 13
15.4 Trademarks 14
16 Contact information 14
17 Contents 15

Please be aware that important notices concerning this document and the product(s) described herein, have been included in section 'Legal information'.

© NXP B.V. 2011. All rights reserved.

For more information, please visit: http://www.nxp.com
For sales office addresses, please send an email to: salesaddresses@nxp.com

Date of release: 16 November 2011
Document identifier: HEF4060B

ENTEGRECİ

Bu belge www.entegreci.com üzerinden sunulmaktadır.

Elektronik komponent tedarikinde Entegreci

Entegreci, Eskişehir merkezli, Türkiye geneline satış yapan bir elektronik komponent mağazasıdır. Entegreler (IC), mikrodenetleyiciler, transistörler, diyotlar, pasif elemanlar, konnektörler, modüller ve geliştirme kartları tek adetten seri üretim adetlerine kadar satılır. Ürün sayfalarında güncel stok durumunu, fiyatı ve datasheet bağlantısını bulabilirsiniz.

Parça koduyla arama

Üretici parça numarasını yazın; stok ve fiyatı hemen görün.

www.entegreci.com

Ürün kategorileri

Entegreden kapasitöre tüm elektronik komponent kategorileri.

Kategorilere göz atın

Üreticiler

Aradığınız üreticinin ürünlerini tek sayfada inceleyin.

Üreticileri görün

Toplu alım ve teklif

Listede olmayan ya da yüksek adetli parçalar için teklif isteyin.

Teklif isteyin

www.entegreci.com | **destek@entegreci.com** | **0850 305 90 34**

Entegreci is an online electronic components store based in Türkiye. Search by manufacturer part number to see stock, prices and datasheets for integrated circuits, microcontrollers, transistors, passive components and connectors, or request a quote for parts that are not listed.

Bu sayfa Entegreci tarafından eklenmiştir. Belgenin önceki sayfaları asıl yayıncısına aittir ve içeriği değiştirilmemiştir; en güncel sürüm için belgenin yayıncısına başvurun.