DATA SHEET

For a complete data sheet, please also download:

- The IC04 LOCMOS HE4000B Logic Family Specifications HEF, HEC
- The IC04 LOCMOS HE4000B Logic Package Outlines/Information HEF, HEC

HEF4024B
MSI
7-stage binary counter

Product specification
File under Integrated Circuits, IC04

January 1995

Philips Semiconductors

PHILIPS

7-stage binary counter

HEF4024B
MSI

DESCRIPTION

The HEF4024B is a 7-stage binary ripple counter with a clock input ($\overline{CP}$), and overriding asynchronous master reset input (MR) and seven fully buffered parallel outputs (O_0 to O_6). The counter advances on the HIGH to LOW transition of $\overline{CP}$. A HIGH on MR clears all counter stages and forces all outputs LOW, independent of $\overline{CP}$. Each counter stage is a static toggle flip-flop.

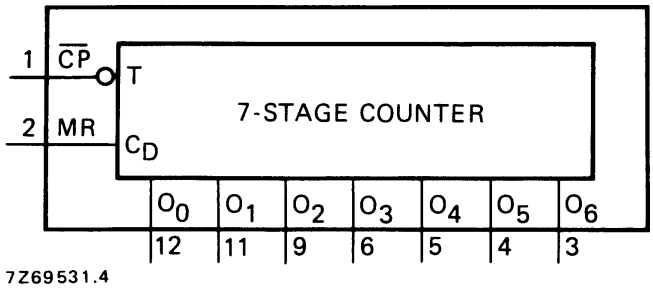

Fig.1 Functional diagram.

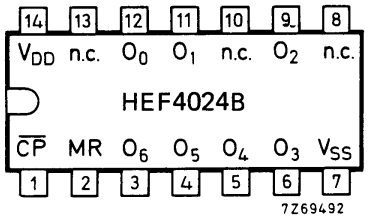

Fig.2 Pinning diagram.

PINNING

$\overline{CP}$	clock input (HIGH to LOW triggered)
MR	master reset input
O_0 to O_6	buffered parallel outputs

APPLICATION INFORMATION

Some examples of applications for the HEF4024B are:

- Frequency dividers
- Time delay circuits

FAMILY DATA, I_{DD} LIMITS category MSI

See Family Specifications

HEF4024BP(N): 14-lead DIL; plastic (SOT27-1)

HEF4024BD(F): 14-lead DIL; ceramic (cerdip) (SOT73)

HEF4024BT(D): 14-lead SO; plastic (SOT108-1)

( ): Package Designator North America

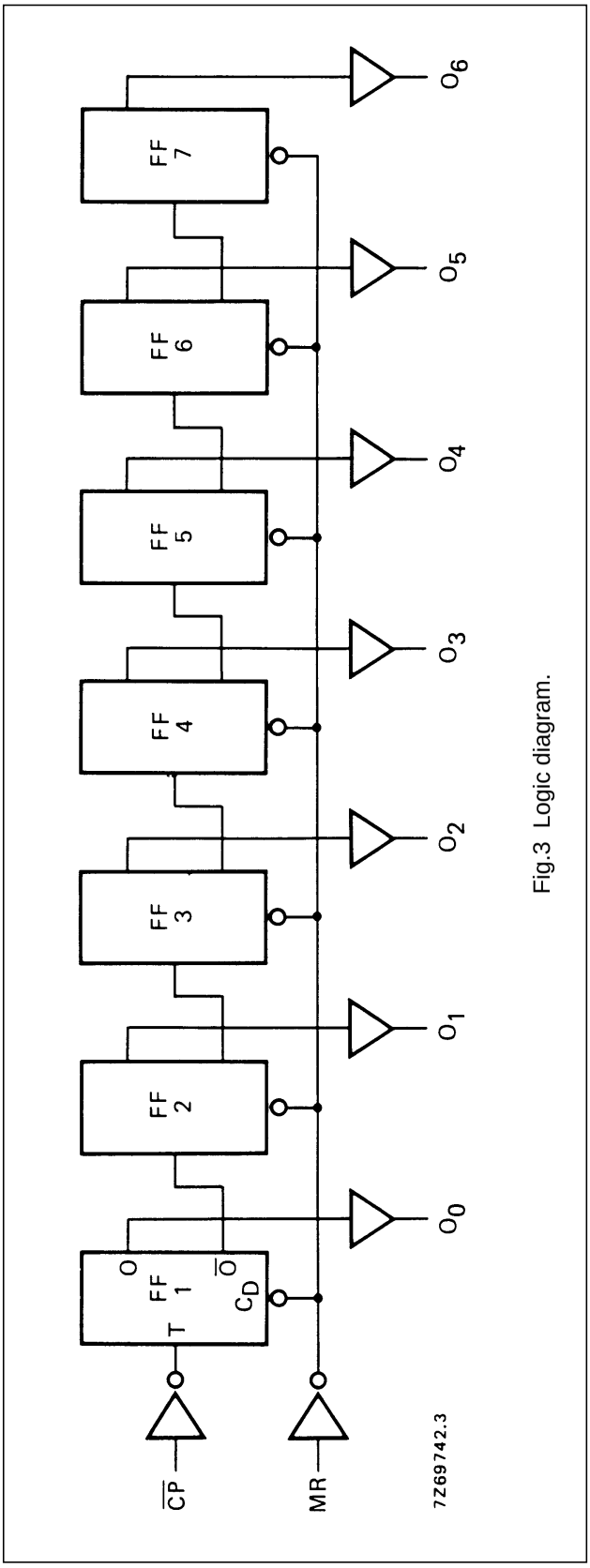

Fig.3 Logic diagram.

AC CHARACTERISTICS

V_{SS} = 0 V; T_{amb} = 25 °C; C_L = 50 pF; input transition times ≤ 20 ns; see also waveforms Fig.4

	V_{DD} V	SYMBOL	MIN.	TYP.	MAX.		TYPICAL EXTRAPOLATION FORMULA
Propagation delays							
$\overline{CP} \rightarrow O_0$	5			100	200	ns	73 ns + (0,55 ns/pF) C_L
HIGH to LOW	10	t_{PHL}		40	75	ns	29 ns + (0,23 ns/pF) C_L
	15			25	50	ns	17 ns + (0,16 ns/pF) C_L
	5			105	210	ns	78 ns + (0,55 ns/pF) C_L
LOW to HIGH	10	t_{PLH}		45	85	ns	34 ns + (0,23 ns/pF) C_L
	15			30	60	ns	22 ns + (0,16 ns/pF) C_L
$O_n \rightarrow O_n + 1$	5			60	120	ns	33 ns + (0,55 ns/pF) C_L
HIGH to LOW	10	t_{PHL}		25	50	ns	14 ns + (0,23 ns/pF) C_L
	15			20	40	ns	12 ns + (0,16 ns/pF) C_L
	5			50	100	ns	23 ns + (0,55 ns/pF) C_L
LOW to HIGH	10	t_{PLH}		20	40	ns	9 ns + (0,23 ns/pF) C_L
	15			15	30	ns	7 ns + (0,16 ns/pF) C_L
$MR \rightarrow O_n$	5			120	240	ns	93 ns + (0,55 ns/pF) C_L
HIGH to LOW	10	t_{PHL}		45	90	ns	34 ns + (0,23 ns/pF) C_L
	15			30	60	ns	22 ns + (0,16 ns/pF) C_L
Output transition times	5			60	120	ns	10 ns + (1,0 ns/pF) C_L
HIGH to LOW	10	t_{THL}		30	60	ns	9 ns + (0,42 ns/pF) C_L
	15			20	40	ns	6 ns + (0,28 ns/pF) C_L
	5			60	120	ns	10 ns + (1,0 ns/pF) C_L
LOW to HIGH	10	t_{TLH}		30	60	ns	9 ns + (0,42 ns/pF) C_L
	15			20	40	ns	6 ns + (0,28 ns/pF) C_L
Minimum clock	5		60	30		ns	
pulse width; HIGH	10	t_{WCPH}	30	15		ns	
	15		20	10		ns	
Minimum MR	5		80	40		ns	
pulse width; HIGH	10	t_{WMRH}	35	20		ns	
	15		25	15		ns	
Recovery time	5		20	10		ns	
for MR	10	t_{RMR}	15	5		ns	
	15		15	5		ns	
Maximum clock	5		5	10		MHz	
pulse frequency	10	f_{max}	13	25		MHz	
	15		18	35		MHz	

	V_{DD} V	TYPICAL FORMULA FOR P (μW)	
Dynamic power dissipation per package (P)	5	$500\ f_i + \sum (f_o C_L) \times V_{DD}^2$	where f_i = input freq. (MHz) f_o = output freq. (MHz) C_L = load cap. (pF) $\sum (f_o C_L)$ = sum of outputs V_{DD} = supply voltage (V)
	10	$2100\ f_i + \sum (f_o C_L) \times V_{DD}^2$	
	15	$5200\ f_i + \sum (f_o C_L) \times V_{DD}^2$	

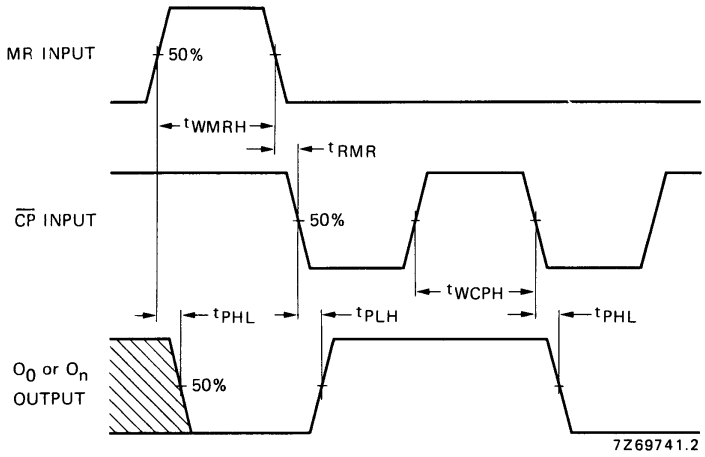

Fig.4 Waveforms showing propagation delays for MR to O_n and $\overline{CP}$ to O_0, minimum MR and $\overline{CP}$ pulse widths and recovery time for MR.

This datasheet has been download from:

www.datasheetcatalog.com

Datasheets for electronics components.

ENTEGRECİ

Bu belge www.entegreci.com üzerinden sunulmaktadır.

Elektronik komponent tedarikinde Entegreci

Entegreci, Eskişehir merkezli, Türkiye geneline satış yapan bir elektronik komponent mağazasıdır. Entegreler (IC), mikrodenetleyiciler, transistörler, diyotlar, pasif elemanlar, konnektörler, modüller ve geliştirme kartları tek adetten seri üretim adetlerine kadar satılır. Ürün sayfalarında güncel stok durumunu, fiyatı ve datasheet bağlantısını bulabilirsiniz.

Parça koduyla arama

Üretici parça numarasını yazın; stok ve fiyatı hemen görün.

www.entegreci.com

Ürün kategorileri

Entegreden kapasitöre tüm elektronik komponent kategorileri.

Kategorilere göz atın

Üreticiler

Aradığınız üreticinin ürünlerini tek sayfada inceleyin.

Üreticileri görün

Toplu alım ve teklif

Listede olmayan ya da yüksek adetli parçalar için teklif isteyin.

Teklif isteyin

www.entegreci.com | **destek@entegreci.com** | **0850 305 90 34**

Entegreci is an online electronic components store based in Türkiye. Search by manufacturer part number to see stock, prices and datasheets for integrated circuits, microcontrollers, transistors, passive components and connectors, or request a quote for parts that are not listed.

Bu sayfa Entegreci tarafından eklenmiştir. Belgenin önceki sayfaları asıl yayıncısına aittir ve içeriği değiştirilmemiştir; en güncel sürüm için belgenin yayıncısına başvurun.