Features

- Operating voltage: 2.2V~5.5V
- Low standby current
- Auto-calibration
- Reliable touch detections
- Standby and normal operating modes
- Maximum key on duration time detection
- Adaptive voltage drop function
- Level Hold, selectable active level- low or high
- NMOS output with internal pull-high/CMOS-Direct Output
- Both serial interface and parallel outputs
- Sensitivity adjustment using an external capacitor
- Minimal number of external components

General Description

The BS81x is a series of 2~16 key touch key devices which can detect human body contact using external touch pads. The high level of device integration enable applications to be implemented with a minimum number of external components.

The BS81x series devices are equipped with serial or parallel interfaces to allow easy communication with an external MCU for device setup and for touch pin monitoring purposes. Special internal circuitry is also employed to ensure excellent power noise rejection to reduce the possibility of false detections, increasing the touch switch application reliability under adverse environmental conditions.

With auto-calibration, low standby current, excellent resistance to voltage fluctuation and other features, this range of touch key devices provide a simple and effective means of implementing touch key operation in a wide variety of applications.

Selection Table

For this device series, most of the feature are similar. The BS8112A-3 and BS8116A-3 provide I²C function. The BS814A-2 and BS818A-2 include a serial interface function while the BS812A-1, BS813A-1, BS814A-1 and BS816A-1 have parallel outputs. Meanwhile the BS8112A-3 and BS8116A-3 can set up some options and the sensitivity through the I²C communication interface and the BS816A-1 and BS818A-2 include two hardware options. The following table summarizes the main characteristics of each device.

Part. No.	Touch Key	Option	Istb@3V	Parallel Outputs	Serial Interface	Power Mode	Auto Calibration	Package
BS812A-1	2-Key	×	2.0μA	NMOS (internal pull-high)	×	Normal and Standby	√	SOT23-6
BS813A-1	3-Key	×	4.5μA		×		√	8SOP
BS814A-1	4-Key	×	5.0μA		×		√	10MSOP
BS814A-2	4-Key	×	5.0μA	×	√		√	8SOP
BS816A-1	6-Key	OMS/LSC(Note 1)	12μA/6μA	NMOS (internal pull-high)/ CMOS-Direct	×		√	16NSOP
BS818A-2	8-Key	OMS/LSC(Note 1)	12μA/6μA	Binary	√		√	16NSOP
BS8112A-3	12-Key	Note 2	13μA/3μA	×	I²C		√	16NSOP
BS8116A-3	16-Key	Note 2	17μA/3.5μA	×	I²C		√	20SOP/SSOP

Note: 1. Refer to the OMS/LSC Option table.

2. Refer to the I²C Option table.

Pin Assignment

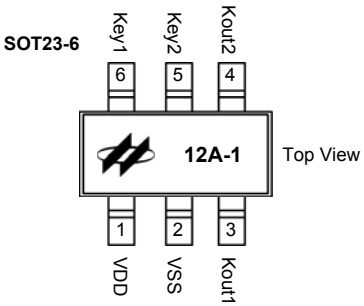

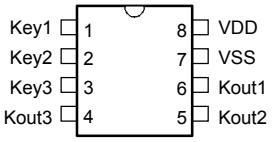

BS813A-1
8SOP-A

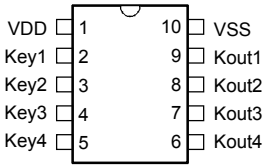

BS814A-1
10MSOP-A

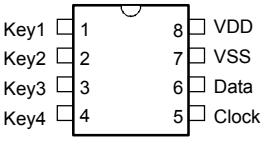

BS814A-2
8SOP-A

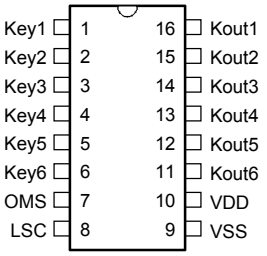

BS816A-1
16 NSOP-A

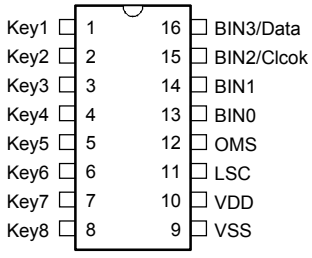

BS818A-2
16 NSOP-A

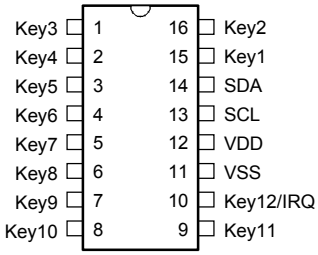

BS8112A-3
16 NSOP-A

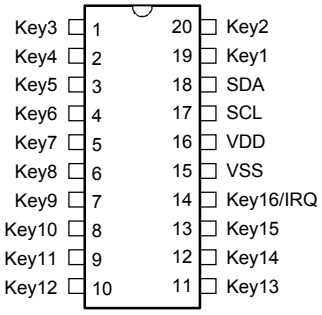

BS8116A-3
20 SOP-A/SSOP-A

Pin Description

BS812A-1

Pin name	I/O	Description
Key1~Key2	Input	Touch key input pin, unused touch keys require grounding
Kout1~Kout2	NMOS output	Touch key output pin with internal pull high
VSS	—	Negative power supply, ground
VDD	—	Positive power supply

BS813A-1

Pin name	I/O	Description
Key1~Key3	Input	Touch key input pin, unused touch keys require grounding
Kout1~Kout3	NMOS output	Touch key output pin with internal pull high
VSS	—	Negative power supply, ground
VDD	—	Positive power supply

BS814A-1

Pin name	I/O	Description
Key1~Key4	Input	Touch key input pin, unused touch keys require grounding
Kout1~Kout4	NMOS output	Touch key output pin with internal pull high
VSS	—	Negative power supply, ground
VDD	—	Positive power supply

BS814A-2

Pin name	I/O	Description
Key1~Key4	Input	Touch key input pin, unused touch keys require grounding
Clock	Input	2-wire series interface Clock input with internal pull high
Data	NMOS output	2-wire series interface Date NMOS output with internal pull high
VSS	—	Negative power supply, ground
VDD	—	Positive power supply

BS816A-1

Pin name	I/O	Description
Key1~Key6	Input	Touch key input pin, unused touch keys require grounding
OMS	Input	Output Mode Selection. Open=NMOS output (low active) Grounded=CMOS-Direct output (high active)
LSC	Input	Power-saving mode selection Open= General power-saving mode Grounded=More power-saving mode
Kout1~Kout6	NMOS output CMOS output	OMS open, NMOS output with internal pull-high. OMS grounded, CMOS-Direct output
VSS	—	Negative power supply, ground
VDD	—	Positive power supply

BS818A-2

Pin name	I/O	Description
Key1~Key8	Input	Touch key input pin, unused touch keys require grounding
OMS	Input	Output Mode Selection. Open = 2-wire serial mode Grounded = 4-wire binary parallel mode
LSC	Input	Power-saving mode selection Open=General power-saving mode Grounded=More power-saving mode
Clock	Input	2-wire series interface Clock input - internal pull- high
Data	NMOS output	Series interface Data NMOS output - internal pull-high
BIN3~BIN0	CMOS output	Binary output mode
VSS	—	Negative power supply, ground
VDD	—	Positive power supply

BS8112A-3

Pin name	I/O	Description
Key1~Key12	Input	Touch key input pin, unused touch keys require grounding
IRQ	Output	Interrupt request or wake-up function, NMOS output with internal pull high
SCL	Input / Output	I^2C clock input/output
SDA	Input / Output	I^2C data input/output
VSS	—	Negative power supply, ground
VDD	—	Positive power supply

BS8116A-3

Pin name	I/O	Description
Key1~Key16	Input	Touch key input pin, unused touch keys require grounding
IRQ	Output	Interrupt request or wake-up function, NMOS output with internal pull high
SCL	Input / Output	I^2C clock input/output
SDA	Input / Output	I^2C data input/output
VSS	—	Negative power supply, ground
VDD	—	Positive power supply

Absolute Maximum Ratings

Supply Voltage ..... V_{SS} -0.3V to V_{SS} +6.5V
Input Voltage ..... V_{SS} -0.3V to V_{DD} +0.3V
I_{OL} Total 80mA
I_{OH} Total ..... -80mA
Storage Temperature ..... -50°C to 125°C
Operating Temperature ..... -40°C to 85°C
Total Power Dissipation 500mW

Note: These are stress ratings only. Stresses exceeding the range specified under "Absolute Maximum Ratings" may cause substantial damage to the device. Functional operation of this device at other conditions beyond those listed in the specification is not implied and prolonged exposure to extreme conditions may affect device reliability.

D.C. Characteristics

Ta=25°C

Symbol	Parameter		Test Conditions		Min.	Typ.	Max.	Unit
			V_{DD}	Conditions				
V_{DD}	Operating Voltage		—	—	2.2	—	5.5	V
I_{DD}	Operating Current (BS812A-1)		3V	No load	—	0.6	0.9	mA
			5V		—	1.2	1.8	mA
	Operating Current (BS813A-1/BS814A-1/ BS814A-2)		3V	No load	—	1.2	1.8	mA
			5V		—	2.2	3.3	mA
	Operating Current (BS816A-1/BS818A-2)		3V	No load	—	1.2	1.8	mA
			5V		—	2.2	3.3	mA
	Operating Current (BS8112A-3/BS8116A-3)		3V	No load	—	1.2	1.8	mA
			5V		—	2.2	3.3	mA
I_{STB}	Standby Current (BS812A-1)(Note 1)		3V	No load	—	2	—	μA
			5V		—	4	—	μA
	Standby Current (BS813A-1)(Note 1)		3V	No load	—	4.5	—	μA
			5V		—	9	—	μA
	Standby Current (BS814A-1/BS814A-2)(Note 1)		3V	No load	—	5.0	—	μA
			5V		—	10	—	μA
	Standby Current (BS816A-1/BS818A-2)(Note 1) LSC=V_{SS} (Note 2)		3V	No load	—	6.0	—	μA
			5V		—	12	—	μA
	Standby Current (BS816A-1/BS818A-2)(Note 1) LSC=Open (Note 2)		3V	No load	—	12	—	μA
			5V		—	25	—	μA
	Standby Current (BS8112A-3)(Note 1) LSC enable(Note 3)	Any one key wake up	3V	No load	—	3	—	μA
			5V		—	6	—	μA
		All keys wake up	3V		—	6.5	—	μA
			5V		—	13	—	μA
	Standby Current (BS8112A-3)(Note 1) LSC disable(Note 3)	Any one key wake up	3V	No load	—	6	—	μA
			5V		—	12	—	μA
		All keys wake up	3V		—	13	—	μA
			5V		—	27	—	μA
	Standby Current (BS8116A-3)(Note 1) LSC enable(Note 3)	Any one key wake up	3V	No load	—	3.5	—	μA
			5V		—	7	—	μA
		All keys wake up	3V		—	9	—	μA
			5V		—	18	—	μA
	Standby Current (BS8116A-3)(Note 1) LSC disable(Note 3)	Any one key wake up	3V	No load	—	7	—	μA
			5V		—	14	—	μA
		All keys wake up	3V		—	17	—	μA
			5V		—	34	—	μA
V_{IL}	Input Low Voltage for Clock, SCL or SDA pin		5V	—	0	—	1.5	V
			—	—	0	—	$0.2V_{DD}$	V
V_{IH}	Input High Voltage for Clock, SCL or SDA pin		5V	—	3.5	—	5.0	V
			—	—	$0.8V_{DD}$	—	V_{DD}	V
I_{OL}	Kout/Data/SDA/SCL Sink Current (NMOS)		3V	$V_{OL}=0.1V_{DD}$	4	8	—	mA
			5V	$V_{OL}=0.1V_{DD}$	10	20	—	mA
I_{OH}	BIN0~BIN3 Source Current (CMOS)		3V	$V_{OH}=0.9V_{DD}$	-2	-4	—	mA
			5V	$V_{OH}=0.9V_{DD}$	-5	-10	—	mA
R_{PH}	Pull-high Resistance to Clock/Kout /SDA/SCL/IRQ pin		3V	—	20	60	100	kΩ
			5V	—	10	30	50	kΩ

Note: 1. I_{STB} is the average standby current.

2. Refer to the OMS/LSC Option table

3. Refer to the I²C Option table

A.C. Characteristics

Ta=25°C

Symbol	Parameter	Test Conditions		Min.	Typ.	Max.	Unit
		V_{DD}	Conditions				
t_{KRT}	Key Response Time --Normal Mode	—	—	100	125	150	ms
	Key Response Time --Standby Mode BS812A-1 / BS813A-1 BS814A-1 / BS814A-2	—	—	100	150	250	ms
	Key Response Time --Standby Mode BS816A-1/BS818A-2	—	LSC=Open (Disable)	100	150	250	ms
		—	LSC=V_{SS} (Enable)	400	600	1000	ms
	Key Response Time -- Standby Mode (BS8112A-3/BS8116A-3)	—	LSC Disable / IRQ Enable	100	150	250	ms
		—	LSC Enable / IRQ Enable	400	600	1000	ms
t_{KH}	Maximum Key Hold Time	—	—	60	64	68	s
t_{CAL}	Auto-Calibration Period -- Normal Mode	—	—	—	1	—	s
	Auto-Calibration Period -- Standby Mode	—	—	—	32	—	s
t_{NS}	Normal to Standby Mode conversion time	—	—	7	8	9	s

Serial Interface Characteristics

BS814A-2/BS818A-2

Ta=25°C

Symbol	Parameter	Test Conditions		Min.	Typ.	Max.	Unit
		V_{DD}	Conditions				
T_{START}	Start bit low time	—	—	—	—	t_{NS}	s
T_{LOW}	Clock low time	—	—	20	—	—	μs
T_{HIGH}	Clock high time	—	—	20	—	—	μs
T_{BR}	Data transfer rate	—	—	—	—	25	Kbps
T_{ED}	Delay time between a error reading and the next reading	—	—	6	—	—	ms

I²C Interface Characteristics

BS8112A-3/BS8116A-3

Ta=25°C

Symbol	Parameter	Test Conditions		Min.	Typ.	Max.	Unit
		V_{DD}	Conditions				
T_{LOW}	Clock low time	—	—	5	—	—	μs
T_{HIGH}	Clock high time	—	—	5	—	—	μs
T_{BR}	Data transfer rate	—	—	—	—	100	Kbps
T_{TO}	Time-Out Period	—	—	—	64	—	ms
T_{WRL}	Register Write/Read Operation Time Limitation (*)	—	—	—	—	6	s

Note: The register read or write operation has to be completed within six seconds after a power-on or a release of a pressed key.

Functional Description

Introduction

This range of BS81x touch key devices offer an easy and reliable means of implementing touch switch functions in a wide range of applications which require 2~16 touch keys. Very few external components are required for full touch key implementations. In addition to simple parallel output, a two-wire serial interface and binary output offer a convenient communication with an external MCU.

Sensitivity adjustment is also an easy matter. By the simple connection of a small capacitor to the touch key input pin, the changes in the capacitor value will be reflected in different sensitivity values. By having a fully integrated adaptive voltage drop function, touch switch applications can save on the usually required LDO.

Option table

OMS/LSC Option table

The BS816A-1 and BS818A-2 provide two options to enhance application flexibility.

- **OMS Option**

	OMS - Output Mode Selection	Description
BS816A-1	Open	NMOS output with internal pull-high, low active
	Vss	CMOS output, high active
BS818A-2	Open	2-wire serial mode
	Vss	4-wire Binary parallel mode

- **LSC Option**

	LSC- Lower Standby Current	Description
BS816A-1/ BS818A-2	Open	General power-saving
	Vss	More power-saving (wake-up time of 0.5~1s)

I²C Option table

BS8112A-3 and BS8116A-3 provide 4 options can be setup by I²C communication interface.

- **IRQ_OMS Option**

Address	bit7	bit6	bit5	bit4	bit3	bit2	bit1	bit0	R/W
0B0H								IRQ_ OMS	R/W

Name	Default	Function
IRQ_OMS	0	0: Level hold, low active 1: One-shot, low active

- **LSC Option**

Address	bit7	bit6	bit5	bit4	bit3	bit2	bit1	bit0	R/W
0B4H		LSC							R/W

Name	Default	Function
LSC	1	0: General power-saving 1: More power-saving (wake-up time of 0.5 ~1s)

- **Touch Key Wake-up Option**

	Address	Name	bit7	bit6	bit5	bit4	bit3	bit2	bit1	bit0	R/W
BS8112A-3	0B5H~0C0H	Kn_TH	KnWU	0	Key n Trigger threshold value						R/W
BS8116A-3	0B5H~0C4H										

Name	Default	Function
KnWU	0	0: Enable wake-up function 1: Disable wake-up function

Operating Mode

There are two operating modes for this device series, the normal mode and the standby mode. During the 8 seconds after power-on, if no touch key actions are detected, the devices will automatically enter the standby mode to reduce their power consumption. If a key or keys are pressed, the device will be woken up and will then enter the normal mode and output the key state value until all keys are released. After 8 seconds, the system will then revert to the standby mode again. Note that the BS8112A-3 and BS8116A-3 devices can set up the wake-up keys individually.

Touch Key Outputs

For the BS812A-1, BS813A-1 and BS814A-1 devices, all output pins are NMOS structures with connected internal pull-high resistors without requiring external resistors. The non touch detect output logic level is high. When a touch action is detected, the corresponding output will change to a low state.

For the BS816A-1 device, except the NMOS output type, users can also select a CMOS output type. The non touch detect output logic level is low. When a touch action is detected, the corresponding output will change to a high state.

Serial Interface

Both the BS814A-2 and BS818A-2 are equipped with a serial interface allowing for easy interfacing to an external master MCU. When the device detects that a touch key has been pressed, it will output a low on the Data pin which can be used to wake up the master MCU. After receiving this low level, the master can then send a clock signal to the Clock pin and read back the key status from the Data pin.

When a low clock signal is received the key status data is prepared by the touch key device. When the clock signal changes to a high level, the master reads the touch key status data from the Data line. The timings associated with the communication protocol can be fully described within 8 clock periods. Without waiting for a start bit, the touch key status condition can also be directly read using a polling method. If there are any errors in reading the data, it is necessary to wait for about 6ms and then read the data again.

4-key Data Format

After a clock signal is received on the Clock pin, an 8-bit data byte will be generated by the touch key device and shifted out on the Data pin. Data bits, bit6~bit4, will also generate a checksum whose content informs how many touch keys have been touched. For example, if the checksum is equal to “010”, it means that two keys have been touched. As to which keys are actually touched, this information can be retrieved from the condition of data bits, bit3~bit0. The state of the data bits, bit3~bit0, is used to indicate which touch keys, key4~key1, are touched or not respectively. A low bit means the corresponding key is touched. Otherwise, the key is not touched if the corresponding data condition is high.

Start bit: When a key changes state, the Data pin outputs a low, which can wake up the master, which can then read the key status.

Bit0: Key1 state - “0”= touch, “1”= no touch

Bit1: Key2 state - “0”= touch, “1”= no touch

Bit2: Key3 state - “0”= touch, “1”= no touch

Bit3: Key4 state - “0”= touch, “1”= no touch

Bit6~4: Checksum – the total number of “0”s is used to indicate how many keys have been touched.

Bit7: Stop bit, always a “1”, high level.

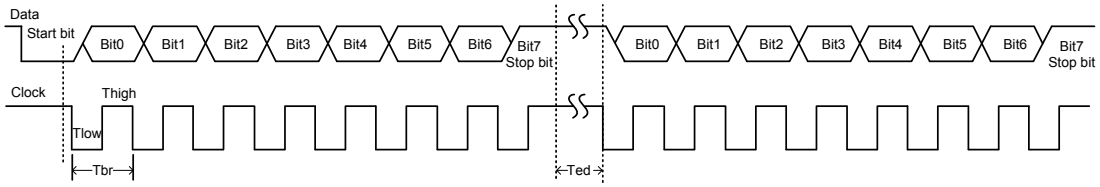

Data Transfer Timing – BS814A-2

Bit	7	6~4	3~0	Descriptions
Function	Stop bit	Check Sum	Key4 ~ Key1 state	0: touched / 1: not touched
Data Stream	1	100	0000	Check Sum = 100, Four keys are touched.
		011	0001, 0010, 0100 or 1000	Check Sum = 011, Three keys are touched.
		010	0011, 0101, 0110, 1001, 1010 or 1100	Check Sum = 010, Two keys are touched.
		001	0111, 1011, 1101 or 1110	Check Sum = 001, One key is touched.
		000	1111	Check Sum = 000, No key is touched.

4-key Serial Data Stream Format

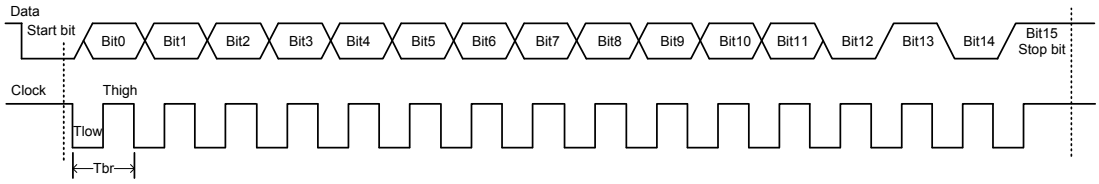

Data Transfer Timing – BS818A-2

8-key Data Format

After a clock signal is received on the Clock pin, a 16-bit data byte will be generated by the touch key device and shifted out on the Data pin. Data bits, bit11~bit8, will also generate a checksum whose content informs how many touch keys have been touched. For example, if the check sum is equal to "0010", it means that two keys have been touched. As to which keys are actually touched, this information can be retrieved from the condition of data bits, bit7~bit0. The state of the data bits, bit7~bit0, is used to indicate which touch keys, key8~key1, are touched or not respectively. A low bit means the corresponding key is touched. Otherwise, the key is not touched if the corresponding data condition is high.

Start bit:When a key state is changed, Data pin outputs a low, which can wake up the master, which can then read the key status.

Bit0: Key1 state - "0"= touch, "1"= no touch

Bit1: Key2 state - "0"= touch, "1"= no touch

Bit2: Key3 state - "0"= touch, "1"= no touch

Bit3: Key4 state - "0"= touch, "1"= no touch

Bit4: Key5 state - "0"= touch, "1"= no touch

Bit5: Key6 state - "0"= touch, "1"= no touch

Bit6: Key7 state - "0"= touch, "1"= no touch

Bit7: Key8 state - "0"= touch, "1"= no touch

Bit11~8: Checksum – the total number of "0"s is used to indicate how many keys have been touched.

Bit15~12: Stop bits, always "1010B".

Bit	15~12	11~8	7~0	Descriptions
Function	**Stop bit**	**Check Sum**	**Key8 ~ Key1 state**	**0: touched / 1: not touched**
Data Stream	1010	1000	00000000	Check Sum = 1000, 8 keys are touched.
		0111	00000001, 00000010, 00000100, 00001000 00010000, 00100000, 01000000 or 10000000	Check Sum = 0111, 7 keys are touched.
		0110	00000011, 00000110, 00011000, 00110000 11000000 or 10000001 ……	Check Sum = 0110, 6 keys are touched.
		0101	00000111, 00001110, 11100000, 10000011, 10000110, 10001100 or 10011000……	Check Sum = 0101, 5 keys is touched.
		0100	00001111, 00011110, 00111100, 01111000, 11110000 or 10000111……	Check Sum = 0100, 4 keys is touched.
		0011	00011111, 00111110, 01111100, 11111000 100011111 or 110001111……	Check Sum = 0011, 3 keys are touched.
		0010	00111111, 01111110, 11111100, 01111110, 01111101or 01111011……	Check Sum = 0010, 2 keys are touched.
		0001	11111110, 11111101, 11111011, 11110111 11101111, 11011111, 10111111 or 01111111	Check Sum = 0001, 1 key is touched.
		0000	11111111	Check Sum = 0000, No key is touched.

Serial Data Stream Format for 8-key

Parallel Interface

The BS818A-2 also provides a parallel interface function which shows directly the key state condition. When the parallel output type is selected, the touch key data reflects only one key state, not more keys, at the same time. When no touch key is pressed, BIN3~BIN0 are high. When any key is pressed, BIN3 must output a low to wake up the master while BIN2~BIN0 reflect which keys are pressed as shown in the following table.

Pressed key	BIN3	BIN2	BIN1	BIN0
No key	1 (high)	1	1	1
Key1	0 (low)	1	1	1
Key2	0	1	1	0
Key3	0	1	0	1
Key4	0	1	0	0
Key5	0	0	1	1
Key6	0	0	1	0
Key7	0	0	0	1
Key8	0	0	0	0

I²C Interface

START and STOP Conditions:

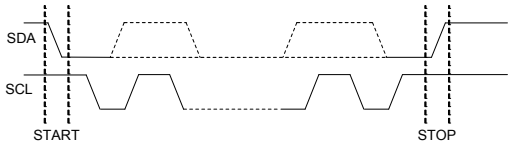

Slave Address

After the START signal, a 7-bit slave address will be transmitted. “The slave address is 0x50. (slave address + R/W = 0xA1 or 0xA0)

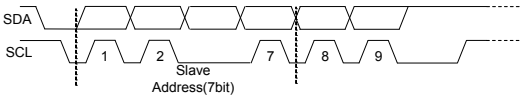

Read or Write Control

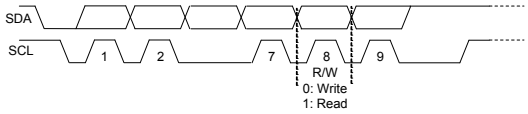

Acknowledge

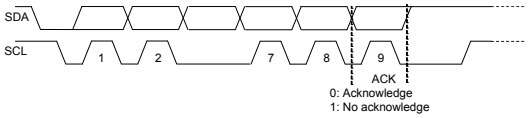

Slave Busy

After a date byte (8bit+ACK) is transmitted, the slave device is busy with processing the received data(slave busy) and cannot receive the next data byte. At this time the SCL line is pulled down and the master can continue to transmit the data until the SCL line is pulled high again.

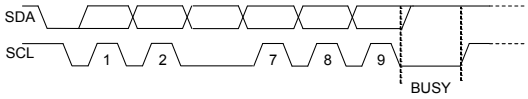

- **Read:**



- **Write:**

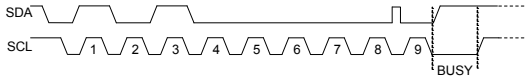

Read Touch-key Status Data Register

Read the touch key status data structure of the BS8112-3 or BS8116A-3.

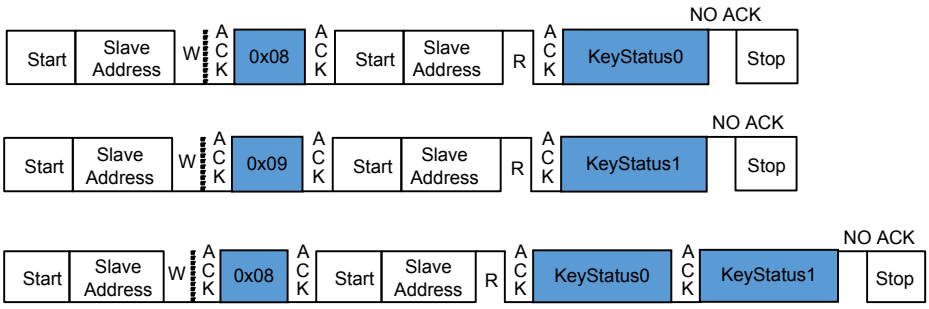

BS8112A-3 and BS8116A-3 Touch-key Status Data Registers

Address	Name	bit7	bit6	bit5	bit4	bit3	bit2	bit1	bit0	R/W
08H	KeyStatus0	Key8	Key7	Key6	Key5	Key4	Key3	Key2	Key1	R
09H	KeyStatus1	Key16 (Note)	Key15 (Note)	Key14 (Note)	Key13 (Note)	Key12	Key11	Key10	Key9	R

Note: Key16~Key13 are only for the BS8116A-3 device.

0=no touch, 1=touch

BS8112A-3 Write Setting Register

When the master will write the setting byte to the BS8112A-3, it must write 18 date bytes consecutively with the start byte of 0xB0 and the last byte of the checksum.

CheckSum (8-bit): DATA1 + DATA2 + … + DATA17

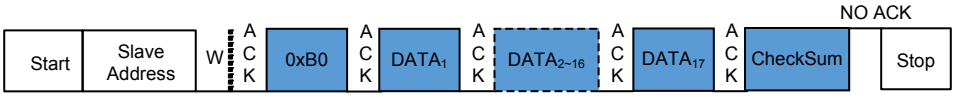

When the setting is changed, the Touch Key module will be reset. For about 0.5s later the Touch Key module can normally operate after reset.

BS8112A-3 Read Setting Register

The master read a setting byte of the BS8112A-3.



The master read n setting bytes of the BS8112A-3.

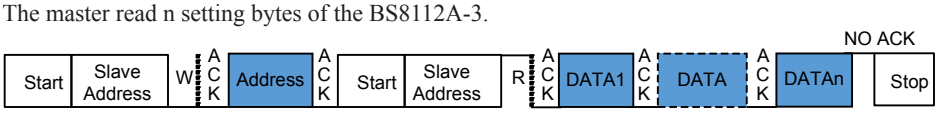

BS8112A-3 Touch-key Setting Registers

Address	Name	bit7	bit6	bit5	bit4	bit3	bit2	bit1	bit0	R/W
B0H	Option1	—							IRQ_OMS	R/W
B1H	Reserve	0x00								R/W
B2H	Reserve	0x83								R/W
B3H	Reserve	0xF3								R/W
B4H	Option2	1	LSC	0	1	1	0	0	0	R/W
B5H	K1_TH	K1WU	0	Key1 Trigger threshold value						R/W
B6H	K2_TH	K2WU	0	Key2 Trigger threshold value						R/W
B7H	K3_TH	K3WU	0	Key3 Trigger threshold value						R/W
B8H	K4_TH	K4WU	0	Key4 Trigger threshold value						R/W
B9H	K5_TH	K5WU	0	Key5 Trigger threshold value						R/W
BAH	K6_TH	K6WU	0	Key6 Trigger threshold value						R/W
BBH	K7_TH	K7WU	0	Key7 Trigger threshold value						R/W
BCH	K8_TH	K8WU	0	Key8 Trigger threshold value						R/W
BDH	K9_TH	K9WU	0	Key9 Trigger threshold value						R/W
BEH	K10_TH	K10WU	0	Key10 Trigger threshold value						R/W
BFH	K11_TH	K11WU	0	Key11 Trigger threshold value						R/W
C0H	K12_TH	K12WU	Mode	Key12 Trigger threshold value						R/W

BS8112A-3 Key12/IRQ Function Selection

Key12 Mode(bit6 of K12_TH)	Function
0	Key12
1	IRQ (Default)

BS8116A-3 Write Setting Register

When the master will write the setting byte to the BS8116A-3, it must write 22 date bytes consecutively with the start byte of 0xB0 and the last byte of the checksum.

CheckSum (8-bit): DATA1 + DATA2 + … + DATA21

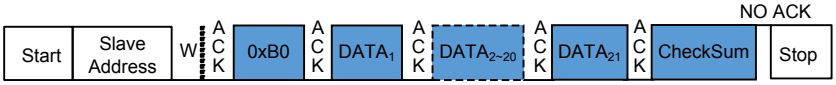

When the setting is changed, the Touch Key module will be reset. For about 0.5s later the Touch Key module can normally operate after reset.

BS8116A-3 Read Setting Register

The master read a setting byte of the BS8116A-3.

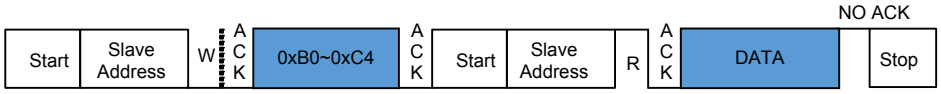

The master read n setting bytes of the BS8116A-3.

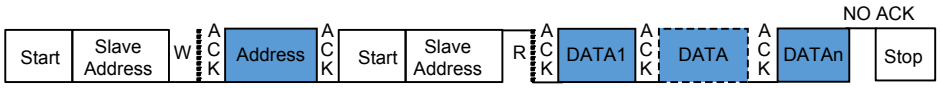

BS8116A-3 Touch-key Sensitivity Setting Register

Address	Name	bit7	bit6	bit5	bit4	bit3	bit2	bit1	bit0	R/W
B0H	Option1	—							IRQ_OMS	R/W
B1H	Reserve	0x00								R/W
B2H	Reserve	0x83								R/W
B3H	Reserve	0xF3								R/W
B4H	Option2	1	LSC	0	1	1	0	0	0	R/W
B5H	K1_TH	K1WU	0	Key1 Trigger threshold value						R/W
B6H	K2_TH	K2WU	0	Key2 Trigger threshold value						R/W
B7H	K3_TH	K3WU	0	Key3 Trigger threshold value						R/W
B8H	K4_TH	K4WU	0	Key4 Trigger threshold value						R/W
B9H	K5_TH	K5WU	0	Key5 Trigger threshold value						R/W
BAH	K6_TH	K6WU	0	Key6 Trigger threshold value						R/W
BBH	K7_TH	K7WU	0	Key7 Trigger threshold value						R/W
BCH	K8_TH	K8WU	0	Key8 Trigger threshold value						R/W
BDH	K9_TH	K9WU	0	Key9 Trigger threshold value						R/W
BEH	K10_TH	K10WU	0	Key10 Trigger threshold value						R/W
BFH	K11_TH	K11WU	0	Key11 Trigger threshold value						R/W
C0H	K12_TH	K12WU	0	Key12 Trigger threshold value						R/W
C1H	K13_TH	K13WU	0	Key13 Trigger threshold value						R/W
C2H	K14_TH	K14WU	0	Key14 Trigger threshold value						R/W
C3H	K15_TH	K15WU	0	Key15 Trigger threshold value						R/W
C4H	K16_TH	K16WU	Mode	Key16 Trigger threshold value						R/W

BS8116A-3 Key16/IRQ Function Selection

Key16 Mode(bit6 of K16_TH)	Function
0	Key16
1	IRQ (Default)

BS8112A-3, BS8116A-3 IRQ_OMS Function

IRQ_OMS (bit0 of Option1)	Function
0	Level hold (Default)
1	One-shot

BS8112A-3, BS8116A-3 Touch-key Wake-up Function Control

KnWU (bit7 of Kn_TH)	Function
0	Wake-up function enabled (Default)
1	Wake-up function disabled

IRQ Function

Output mode: IRQ_OMS = 0 (Level hold, low active)

The master reads the key data when the IRQ is low and will stop reading data until the key data is 0.

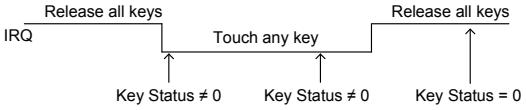

Output mode: IRQ_OMS = 1 (One-shot, low active)

When the key status changes, send one-shot signal.

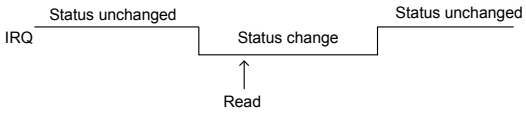

When the IRQ function is disabled, the Key12 of the BS8112A-3 or the Key16 of BS8116A-3 is used as the touch key. When the master read “KeyStatus=0x00”, which means all the keys is released, the master can reduce the reading speed and make the power consumption lower, the corresponding, the key response speed will also slow down.

Maximum Key On Duration Time

To minimise the possibility of unintentional switch detections, such as undesired objects covering the sensing electrodes, the devices include a Maximum Key On duration time function. To implement this function the devices include an internal timer, which starts running after each switch detection. If the key on time of a touch key exceeds a value of about 64 seconds, then the device will re-calibrate the key state, obtain a new reference value, while the output status is reset to the initial state.

Auto-calibration Function

The devices include a full auto-calibration function which will be initiated after the device is powered-on. In addition to the power-on calibration, if no switch detection has been made for about more than 1 second in the normal mode or 32 seconds in the standby mode, then a further calibration procedure will be carried out. By implementing this feature, changes in the touch key environmental conditions are automatically catered for dynamically.

Adaptive Voltage Drop

This series of touch key devices include an adaptive voltage drop function which prevent touch key malfunction due to power supply voltage variations which may be caused by high current switching. With the adaptive voltage drop function, there is no need for an external LDO to deal with these voltage drop issues.

Sensitivity Adjustment

The sensitivity of the switch is a very important consideration in most applications whose requirements will vary according to the user application. The user should therefore be aware of the methods which can adjust the sensitivity of their touch key application. Changing the PCB electrode size, the conductive layout area below the electrode and the thickness of the dielectric material panel can all be used to adjust the touch switch sensitivity. Additionally for the BS81x device series, except the BS8112A-3 and BS8116A-3 devices, an external capacitor connected to the touch key input pin can also be used to adjust the sensitivity for different applications. While for the BS8112A-3 and BS8116A-3 devices, changing related settings through the I²C can be used to adjust the sensitivity for different demands.

The touch threshold adjustment range is from 8~63.

Application Circuits

BS812A-1

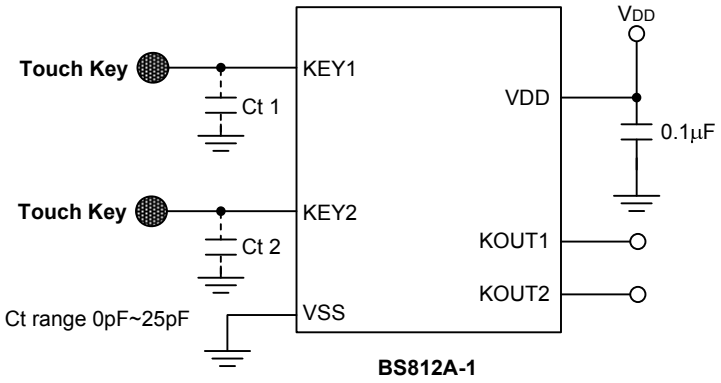

Note: 1. Ct (C threshold) is used for adjustment of Trigger Threshold. Recommended value: 0~25 pF

2. Ct value can be changed to obtain different sensitivity values. Higher Ct values will result in lower sensitivity levels. (0pF = no Ct)

BS813A-1

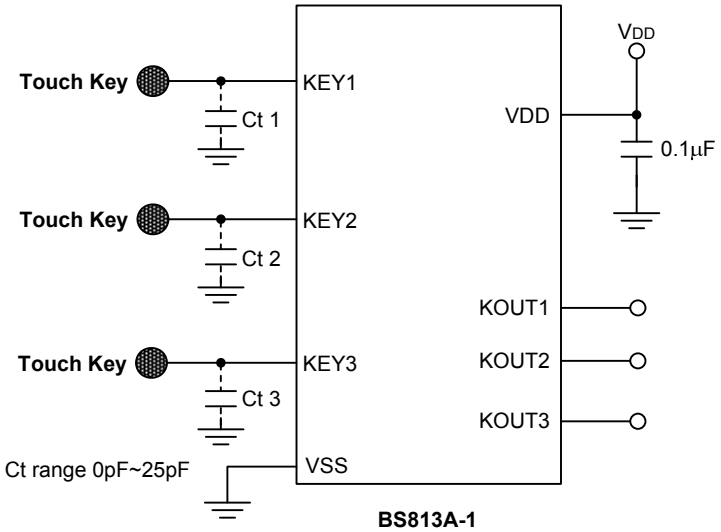

Note: 1. Ct (C threshold) is used for adjustment of Trigger Threshold. Recommended value: 0~25 pF

2. Ct value can be changed to obtain different sensitivity values. Higher Ct values will result in lower sensitivity levels. (0pF = no Ct)

BS814A-1

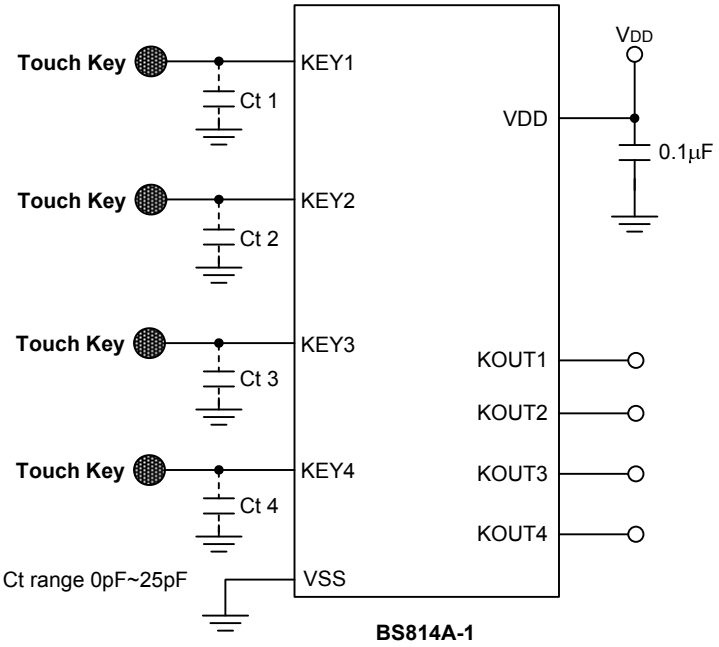

BS814A-1

Note: 1. Ct (C threshold) is used for adjustment of Trigger Threshold. Recommended value: 0~25 pF

2. Ct value can be changed to obtain different sensitivity values. Higher Ct values will result in lower sensitivity levels. (0pF = no Ct)

BS814A-2

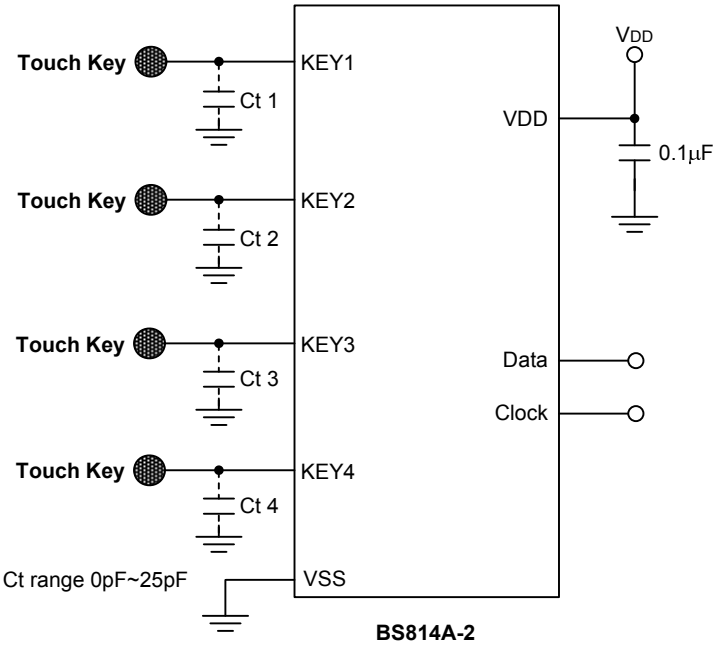

BS814A-2

Note: 1. Ct (C threshold) is used for adjustment of Trigger Threshold. Recommended value: 0~25 pF

2. Ct value can be changed to obtain different sensitivity values. Higher Ct values will result in lower sensitivity levels. (0pF = no Ct)

BS816A-1

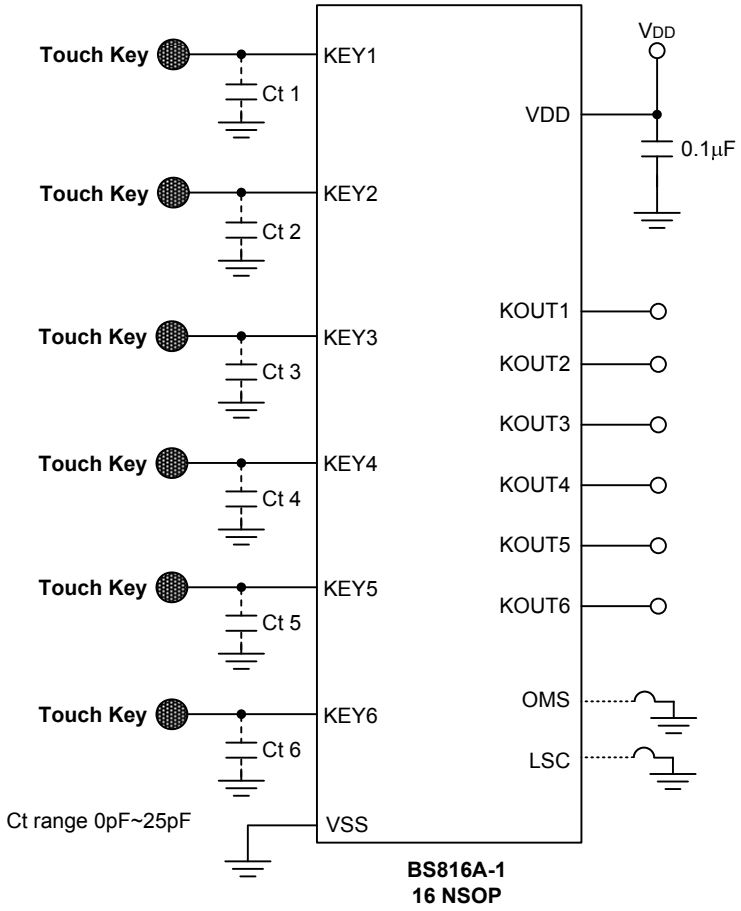

Note: 1. Ct (C threshold) is used for adjustment of Trigger Threshold. Recommended value: 0~25 pF

2. Ct value can be changed to obtain different sensitivity values. Higher Ct values will result in lower sensitivity levels. (0pF = no Ct)

BS818A-2 – Serial Interface Mode

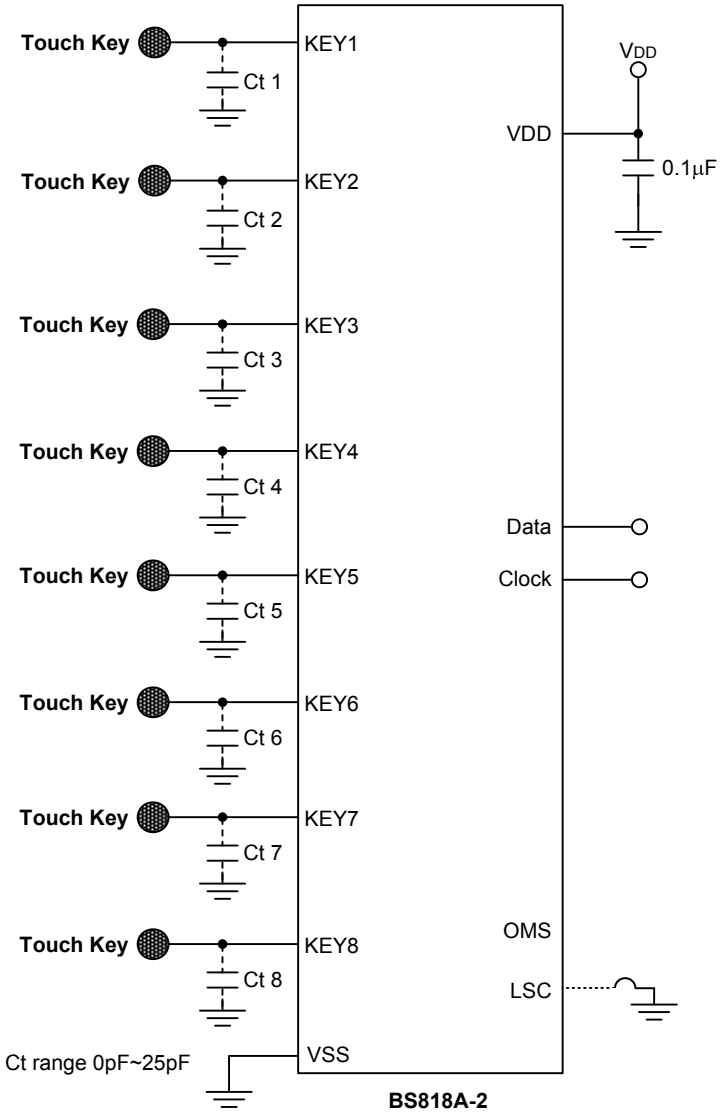

Note: 1. Ct (C threshold) is used for adjustment of Trigger Threshold. Recommended value: 0~25 pF

2. Ct value can be changed to obtain different sensitivity values. Higher Ct values will result in lower sensitivity levels. (0pF = no Ct)

BS818A-2 – Parallel Interface Mode

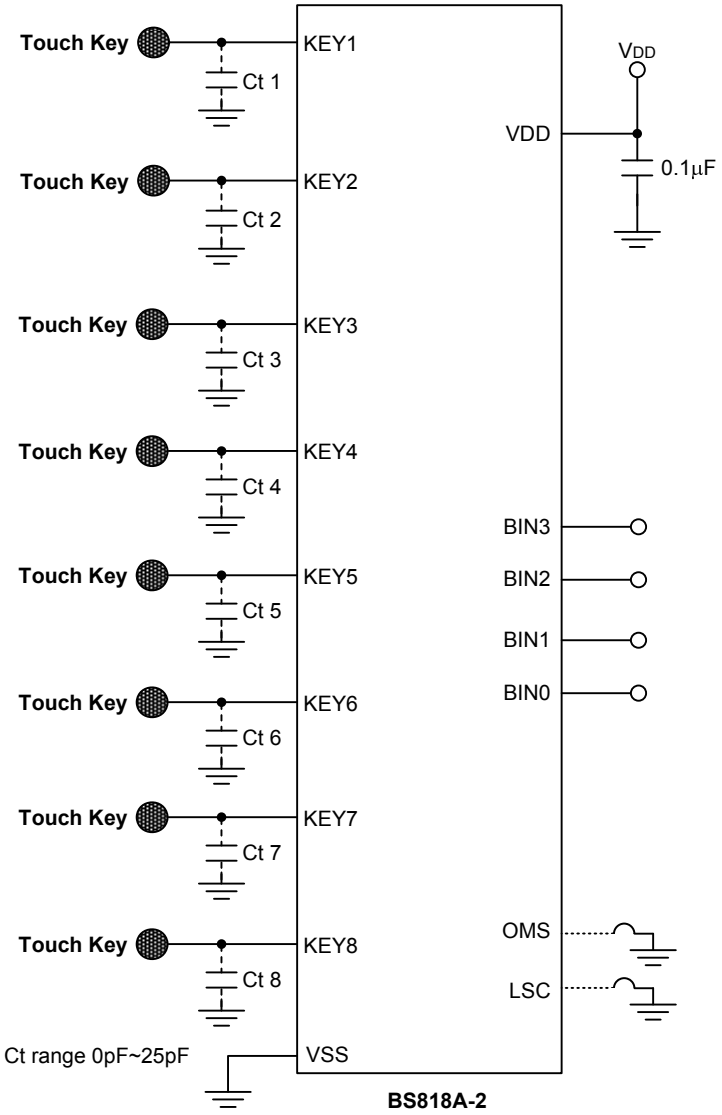

Note: 1. Ct (C threshold) is used for adjustment of Trigger Threshold. Recommended value: 0~25 pF

2. Ct value can be changed to obtain different sensitivity values. Higher Ct values will result in lower sensitivity levels. (0pF = no Ct)

BS8112A-3

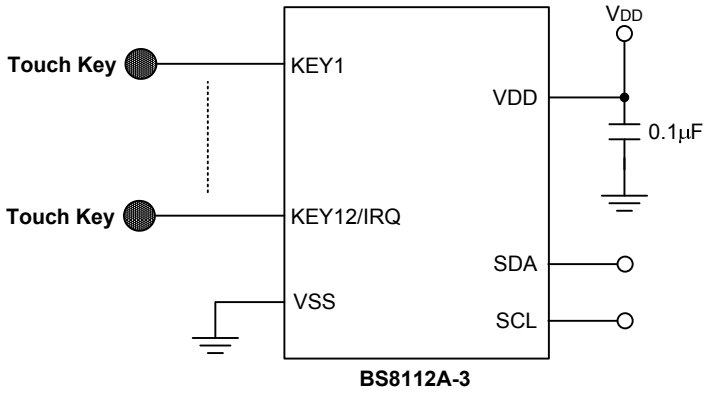

BS8116A-3

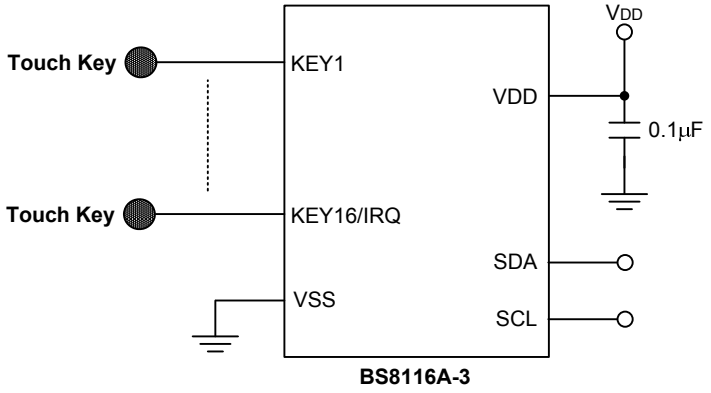

Package Information

Note that the package information provided here is for consultation purposes only. As this information may be updated at regular intervals users are reminded to consult the Holtek website for the latest version of the package information.

Additional supplementary information with regard to packaging is listed below. Click on the relevant section to be transferred to the relevant website page.

- Further Package Information (include Outline Dimensions, Product Tape and Reel Specifications)
- Packing Meterials Information
- Carton information

6-pin SOT23-6 Outline Dimensions

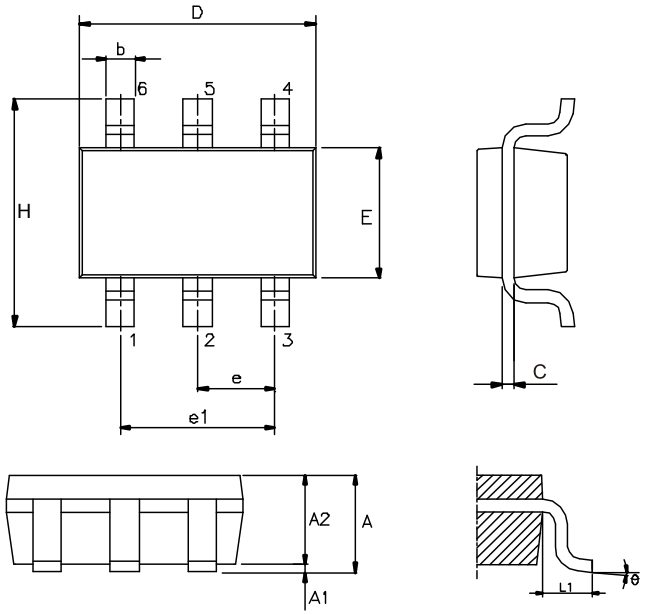

Symbol	Dimensions in inch		
	Min.	Nom.	Max.
A	—	—	0.057
A1	—	—	0.006
A2	0.035	0.045	0.051
b	0.012	—	0.020
C	0.003	—	0.009
D	—	0.114 BSC	—
E	—	0.063 BSC	—
e	—	0.037 BSC	—
e1	—	0.075 BSC	—
H	—	0.110 BSC	—
L	0.012	0.018	0.024
θ	0°	—	8°

Symbol	Dimensions in mm		
	Min.	Nom.	Max.
A	—	—	1.45
A1	—	—	0.15
A2	0.90	1.15	1.30
b	0.30	—	0.50
C	0.08	—	0.22
D	—	2.90 BSC	—
E	—	1.60 BSC	—
e	—	0.95 BSC	—
e1	—	1.90 BSC	—
H	—	2.80 BSC	—
L	0.30	0.45	0.60
θ	0°	—	8°

8-pin SOP (150mil) Outline Dimensions

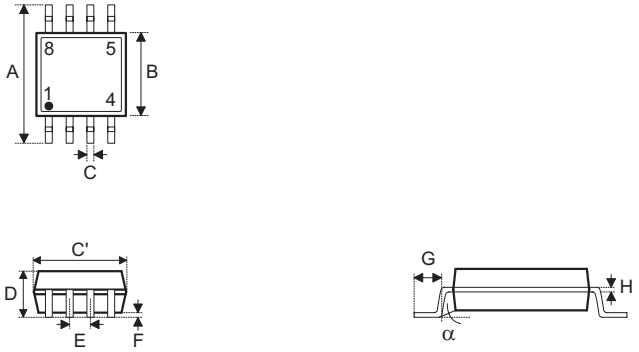

Symbol	Dimensions in inch		
	Min.	Nom.	Max.
A	—	0.236 BSC	—
B	—	0.154 BSC	—
C	0.012	—	0.020
C’	—	0.193 BSC	—
D	—	—	0.069
E	—	0.050 BSC	—
F	0.004	—	0.010
G	0.016	—	0.050
H	0.004	—	0.010
α	0°	—	8°

Symbol	Dimensions in mm		
	Min.	Nom.	Max.
A	—	6.0 BSC	—
B	—	3.9 BSC	—
C	0.31	—	0.51
C’	—	4.9 BSC	—
D	—	—	1.75
E	—	1.27 BSC	—
F	0.10	—	0.25
G	0.40	—	1.27
H	0.10	—	0.25
α	0°	—	8°

10-pin MSOP Outline Dimensions

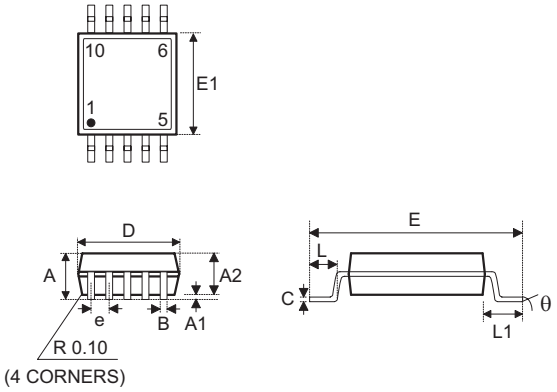

Symbol	Dimensions in inch		
	Min.	Nom.	Max.
A	—	—	0.043
A1	0.000	—	0.006
A2	0.030	0.033	0.037
b	0.007	—	0.013
c	0.003	—	0.009
D	—	0.118 BSC	—
E	—	0.193 BSC	—
E1	—	0.118 BSC	—
e	—	0.020 BSC	—
L	0.016	0.024	0.031
L1	—	0.037 BSC	—
y	—	0.004	—
α	0°	—	8°

Symbol	Dimensions in mm		
	Min.	Nom.	Max.
A	—	—	1.10
A1	0.00	—	0.15
A2	0.75	0.85	0.95
b	0.17	—	0.33
c	0.08	—	0.23
D	—	3.0 BSC	—
E	—	4.9 BSC	—
E1	—	3.0 BSC	—
e	—	0.5 BSC	—
L	0.40	0.60	0.80
L1	—	0.95 BSC	—
y	—	0.1	—
α	0°	—	8°

16-pin NSOP (150mil) Outline Dimensions

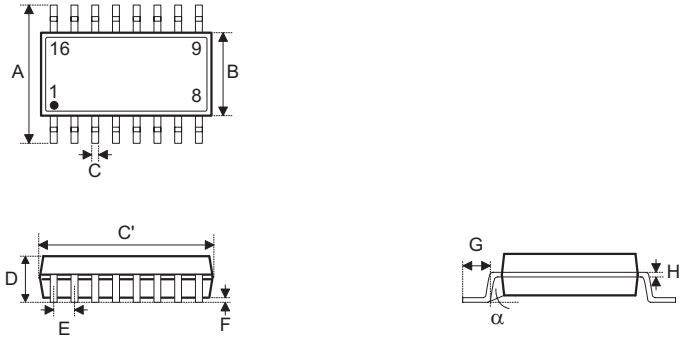

Symbol	Dimensions in inch		
	Min.	Nom.	Max.
A	—	0.236 BSC	—
B	—	0.154 BSC	—
C	0.012	—	0.020
C’	—	0.390 BSC	—
D	—	—	0.069
E	—	0.050 BSC	—
F	0.004	—	0.010
G	0.016	—	0.050
H	0.004	—	0.010
α	0°	—	8°

Symbol	Dimensions in mm		
	Min.	Nom.	Max.
A	—	6.0 BSC	—
B	—	3.9 BSC	—
C	0.31	—	0.51
C’	—	9.9 BSC	—
D	—	—	1.75
E	—	1.27 BSC	—
F	0.10	—	0.25
G	0.40	—	1.27
H	0.10	—	0.25
α	0°	—	8°

20-pin SOP (300mil) Outline Dimensions

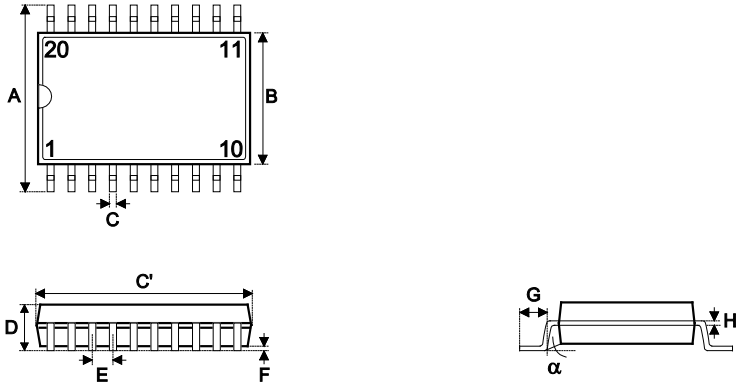

Symbol	Dimensions in inch		
	Min.	Nom.	Max.
A	—	0.406 BSC	—
B	—	0.295 BSC	—
C	0.012	—	0.020
C’	—	0.504 BSC	—
D	—	—	0.104
E	—	0.050 BSC	—
F	0.004	—	0.012
G	0.016	—	0.050
H	0.008	—	0.013
α	0°	—	8°

Symbol	Dimensions in mm		
	Min.	Nom.	Max.
A	—	10.30 BSC	—
B	—	7.5 BSC	—
C	0.31	—	0.51
C’	—	12.8 BSC	—
D	—	—	2.65
E	—	1.27 BSC	—
F	0.10	—	0.30
G	0.40	—	1.27
H	0.20	—	0.33
α	0°	—	8°

20-pin SSOP (150mil) Outline Dimensions

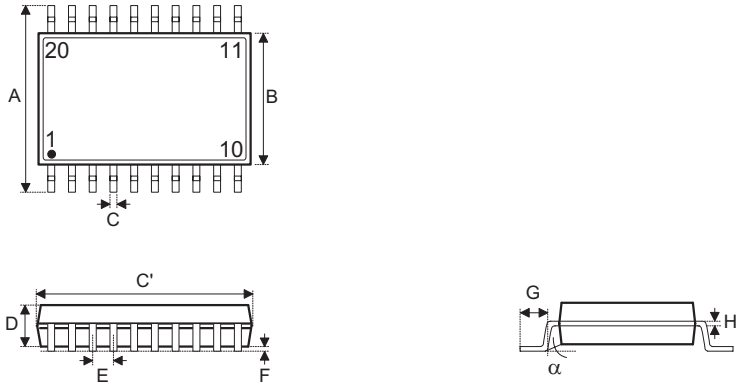

Symbol	Dimensions in inch		
	Min.	Nom.	Max.
A	—	0.236 BSC	—
B	—	0.154 BSC	—
C	0.008	—	0.012
C’	—	0.341 BSC	—
D	—	—	0.069
E	—	0.025 BSC	—
F	0.004	—	0.01
G	0.016	—	0.05
H	0.004	—	0.01
α	0°	—	8°

Symbol	Dimensions in mm		
	Min.	Nom.	Max.
A	—	6.000 BSC	—
B	—	3.900 BSC	—
C	0.20	—	0.30
C’	—	8.660 BSC	—
D	—	—	1.75
E	—	0.635 BSC	—
F	0.10	—	0.25
G	0.41	—	1.27
H	0.10	—	0.25
α	0°	—	8°

Copyright© 2018 by HOLTEK SEMICONDUCTOR INC.

The information appearing in this Data Sheet is believed to be accurate at the time of publication. However, Holtek assumes no responsibility arising from the use of the specifications described. The applications mentioned herein are used solely for the purpose of illustration and Holtek makes no warranty or representation that such applications will be suitable without further modification, nor recommends the use of its products for application that may present a risk to human life due to malfunction or otherwise. Holtek's products are not authorized for use as critical components in life support devices or systems. Holtek reserves the right to alter its products without prior notification. For the most up-to-date information, please visit our web site at http://www.holtek.com.tw.

ENTEGRECİ

Bu belge www.entegreci.com üzerinden sunulmaktadır.

Elektronik komponent tedarikinde Entegreci

Entegreci, Eskişehir merkezli, Türkiye geneline satış yapan bir elektronik komponent mağazasıdır. Entegreler (IC), mikrodenetleyiciler, transistörler, diyotlar, pasif elemanlar, konnektörler, modüller ve geliştirme kartları tek adetten seri üretim adetlerine kadar satılır. Ürün sayfalarında güncel stok durumunu, fiyatı ve datasheet bağlantısını bulabilirsiniz.

Parça koduyla arama

Üretici parça numarasını yazın; stok ve fiyatı hemen görün.

www.entegreci.com

Ürün kategorileri

Entegreden kapasitöre tüm elektronik komponent kategorileri.

Kategorilere göz atın

Üreticiler

Aradığınız üreticinin ürünlerini tek sayfada inceleyin.

Üreticileri görün

Toplu alım ve teklif

Listede olmayan ya da yüksek adetli parçalar için teklif isteyin.

Teklif isteyin

www.entegreci.com | **destek@entegreci.com** | **0850 305 90 34**

Entegreci is an online electronic components store based in Türkiye. Search by manufacturer part number to see stock, prices and datasheets for integrated circuits, microcontrollers, transistors, passive components and connectors, or request a quote for parts that are not listed.

Bu sayfa Entegreci tarafından eklenmiştir. Belgenin önceki sayfaları asıl yayıncısına aittir ve içeriği değiştirilmemiştir; en güncel sürüm için belgenin yayıncısına başvurun.