MCR106

SCR

REVERSE BLOCKING TRIODE THYRISTORS

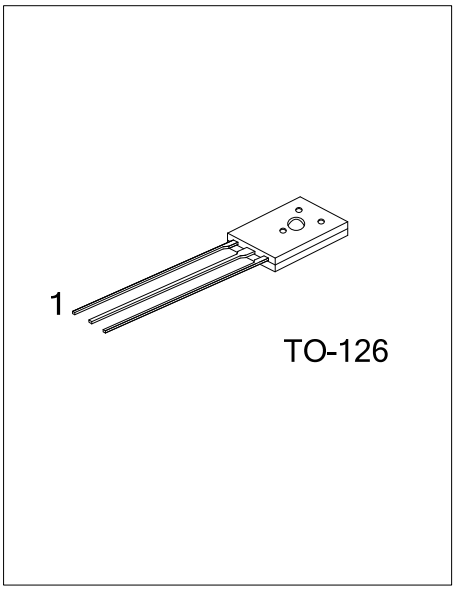

■ DESCRIPTION

PNPN devices designed for high volume consumer applications such as temperature, light and speed control; process and remote control, and warning systems where reliability of operation is important.

■ FEATURES

* Glass-passivated surface for reliability and uniformity
* Power rated at economical prices
* Practical level triggering and holding characteristics
* Flat, rugged, thermopad construction for low thermal resistance, high heat dissipation and durability

■ ORDERING INFORMATION

Ordering Number		Package	Pin Assignment			Packing
Lead Free	Halogen Free		1	2	3	
MCR106L-6-T60-K	MCR106G-6-T60-K	TO-126	K	A	G	Bulk
MCR106L-8-T60-K	MCR106G-8-T60-K	TO-126	K	A	G	Bulk

Note: Pin assignment: G: Gate K: Cathode A: Anode

MCR106L-6-T60-K

(1) Packing Type
(2) Package Type
(3) Green Package

(1) K: Bulk
(2) T60: TO-126
(3) L: Lead Free, G: Halogen Free and Lead Free

■ MARKING

MCR106-6	MCR106-8
UTC □□□□ MCR106□-6 1 Data Code L: Lead Free G: Halogen Free	UTC □□□□ MCR106□-8 1 Data Code L: Lead Free G: Halogen Free

Copyright © 2014 Unisonic Technologies Co., Ltd

■ ABSOLUTE MAXIMUM RATINGS (T_J=25°C, unless otherwise specified)

PARAMETER		SYMBOL	RATINGS	UNIT
Peak Repetitive Forward and Reverse Blocking Voltage (Note 1) (T_J=110°C, R_{GK}=1kΩ)	MCR106-6	V_{DRM}, V_{RRM}	400	V
	MCR106-8		600	V
RMS Forward Current (All conduction Angles)		$I_{T(RMS)}$	4	A
Average Forward Current (T_C=93°C or T_A=30°C)		$I_{T(AV)}$	2.55	A
Peak Non-repetitive Surge Current (1/2 Cycle, 60Hz, T_J=-40 ~ +110°C)		I_{TSM}	25	A
Circuit Fusing Considerations (t=8.3 ms)		I^2t	2.6	A^2S
Peak Gate Power		P_{GM}	0.5	W
Average Gate Power		$P_{G(AV)}$	0.1	W
Peak Forward Gate Current		I_{GM}	0.2	A
Peak Reversed Gate Voltage		V_{RGM}	6	V
Mounting Torque (Note 2)			6	In. lb.
Junction Temperature		T_J	+110	°C
Storage Temperature		T_{STG}	-40 ~ +150	°C

Notes: 1. V_{DRM} and V_{RRM} for all types can be applied on a continuous basis. Ratings apply for zero or negative gate voltage; however, positive gate voltage shall not be applied concurrent with negative potential on the anode. Blocking voltages shall not be tested with a constant current source such that the voltage of the devices are exceeded.

2. Torque rating applies with use of compression washer (B52200-F006 or equivalent). Mounting torque in excess of 6 in. lb. does not appreciably lower case-to-sink thermal resistance. Anode lead and heatsink contact pad are common. For soldering purposes (either terminal connection or device mounting), soldering temperatures shall not exceed +200°C. For optimum results, an activated flux (oxide removing) is recommended.

3. Absolute maximum ratings are those values beyond which the device could be permanently damaged. Absolute maximum ratings are stress ratings only and functional device operation is not implied.

■ THERMAL DATA

PARAMETER	SYMBOL	RATINGS	UNIT
Junction to Ambient	θ_{JA}	75	°C/W
Junction to Case	θ_{JC}	3	°C/W

■ ELECTRICAL CHARACTERISTICS (T_C=25°C and R_{GK}=1000Ω, unless otherwise specified)

PARAMETER	SYMBOL	TEST CONDITIONS	MIN	TYP	MAX	UNIT
Peak Forward or Reverse Blocking Current (V_{AK}=Rated V_{DRM} or V_{RRM})	I_{DRM},I_{RRM}	T_J=25°C			10	μA
		T_J=100°C			200	μA
Forward “On” Voltage (I_{TM}=4A peak)	V_{TM}				2	V
Gate Trigger Current (continuous DC) (Note)	I_{GT}	V_{AK}=7V, R_L=100Ω			200	μA
		V_{AK}=7V, R_L=100Ω, T_C=-40°C			500	
Gate Trigger Voltage (continuous DC)	V_{GT}	V_{AK}=7V, R_L=100Ω, T_C=25°C			1	V
Gate Non-Trigger Voltage	V_{GD}	V_{AK}=Rated V_{DRM}, R_L=100Ω, T_J=110°C	0.2			V
Holding Current	I_H	V_{AK}=7V, T_C=25°C			5	mA
Forward Voltage Application Rate	dv/dt	T_J=110°C		10		V/μs

Note: R_{GK} current is not included in measurement.

■ TYPICAL CHARACTERISTICS

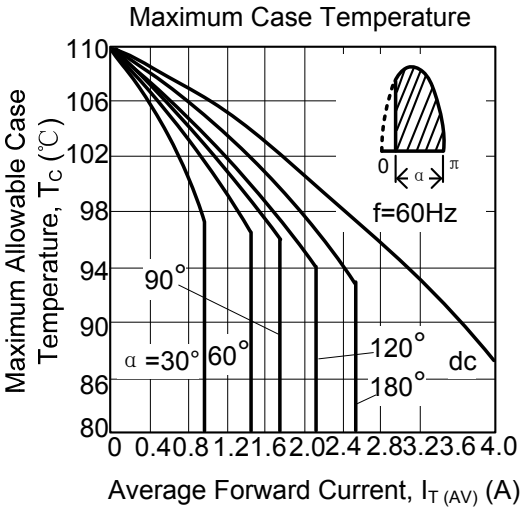

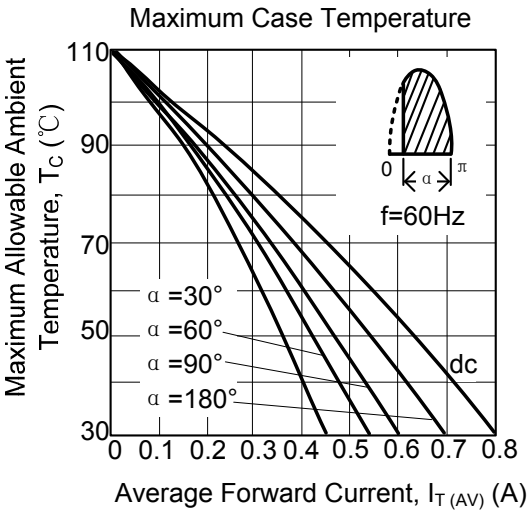

UTC assumes no responsibility for equipment failures that result from using products at values that exceed, even momentarily, rated values (such as maximum ratings, operating condition ranges, or other parameters) listed in products specifications of any and all UTC products described or contained herein. UTC products are not designed for use in life support appliances, devices or systems where malfunction of these products can be reasonably expected to result in personal injury. Reproduction in whole or in part is prohibited without the prior written consent of the copyright owner. The information presented in this document does not form part of any quotation or contract, is believed to be accurate and reliable and may be changed without notice.

ENTEGRECİ

Bu belge www.entegreci.com üzerinden sunulmaktadır.

Elektronik komponent tedarikinde Entegreci

Entegreci, Eskişehir merkezli, Türkiye geneline satış yapan bir elektronik komponent mağazasıdır. Entegreler (IC), mikrodenetleyiciler, transistörler, diyotlar, pasif elemanlar, konnektörler, modüller ve geliştirme kartları tek adetten seri üretim adetlerine kadar satılır. Ürün sayfalarında güncel stok durumunu, fiyatı ve datasheet bağlantısını bulabilirsiniz.

Parça koduyla arama

Üretici parça numarasını yazın; stok ve fiyatı hemen görün.

www.entegreci.com

Ürün kategorileri

Entegreden kapasitöre tüm elektronik komponent kategorileri.

Kategorilere göz atın

Üreticiler

Aradığınız üreticinin ürünlerini tek sayfada inceleyin.

Üreticileri görün

Toplu alım ve teklif

Listede olmayan ya da yüksek adetli parçalar için teklif isteyin.

Teklif isteyin

www.entegreci.com | **destek@entegreci.com** | **0850 305 90 34**

Entegreci is an online electronic components store based in Türkiye. Search by manufacturer part number to see stock, prices and datasheets for integrated circuits, microcontrollers, transistors, passive components and connectors, or request a quote for parts that are not listed.

Bu sayfa Entegreci tarafından eklenmiştir. Belgenin önceki sayfaları asıl yayıncısına aittir ve içeriği değiştirilmemiştir; en güncel sürüm için belgenin yayıncısına başvurun.