PWM DC/DC CONVERTER IC

■GENERAL DESCRIPTION

The **NJM2374A** is a PWM DC/DC converter IC.

It features fixed frequency type PWM control for better noise handling and to avoid intermittent oscillation observed in a simplified controller.

It is suitable for Step-Up, Step-Down and Inverting applications for EMI sensitive application.

■PACKAGE OUTLINE

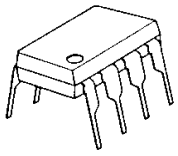

NJM2374AD

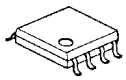

NJM2374AM

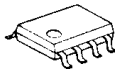

NJM2374AE



NJM2374AV

■FEATURES

- ●Operating Voltage (2.5V* to 40V)
- ●NJM2374AE Operating Voltage (2.5V* to 48V)
- ●Wide Oscillator Frequency (100Hz to 100kHz)
- ●Internal High Power Transistor 1.5A (max.)
- ●Internal Over Current Limit Circuit
- ●PWM form Switching Power Supply Control
- ●Bipolar Technology
- ●Package Outline DIP8, DMP8, EMP8, SSOP14

*Ta =25°C. At low temperature, the minimum voltage is 3.0V.

■PIN CONFIGURATION

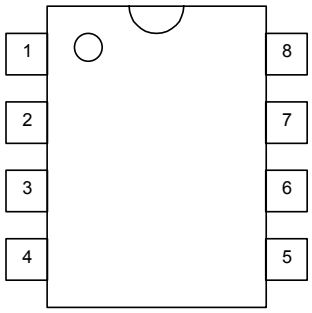

NJM2374AD
NJM2374AM
NJM2374AE

PIN FUNCTION

1.C_S	5.IN^+
2.E_S	6.V^+
3.C_T	7.S_I
4.GND	8.C_D

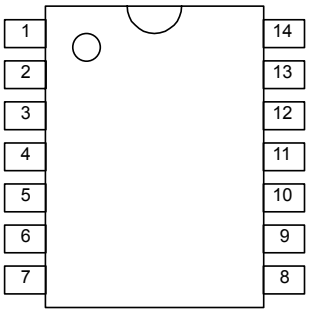

NJM2374AV

PIN FUNCTION

1.C_S	8.IN^+
2.NC	9.NC
3.E_S	10.V^+
4.NC	11.NC
5.C_T	12.S_I
6.NC	13.NC
7.GND	14.C_D

■BLOCK DIAGRAM

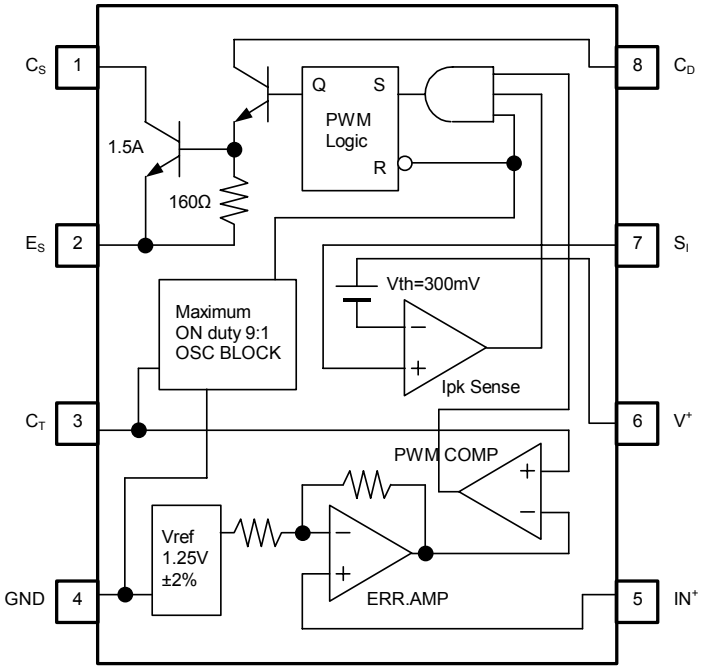

(DIP8, DMP8, EMP8: PACKAGE)

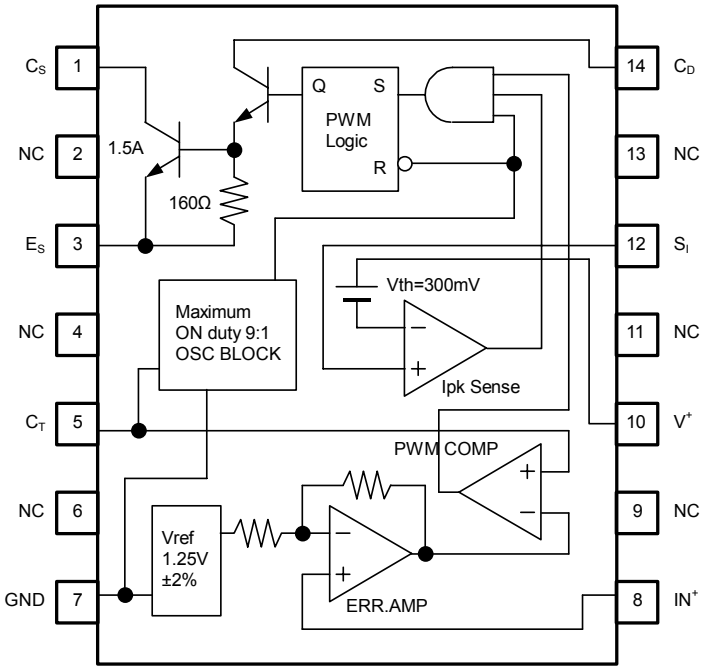

(SSOP14: PACKAGE)

■ABSOLUTE MAXIMUM RATINGS (Ta=25°C)

PARAMETER	SYMBOL	RATINGS	UNIT
Maximum Supply Voltage	V^+	40 (NJM2374AE: 48V)	V
Output Switch Current	I_{SW}	1.5	A
Output Switch Voltage	V_{SW}	40 (NJM2374AE: 48V)	V
Comparator Input Voltage	V_{IR}	-0.3 ~ 40 (NJM2374AE: 48V)	V
Power Dissipation	P_D	(DIP8) 875 (DMP8) 750 (note1) (EMP8) 1,000 (note1) (SSOP14) 375	mW
Operating Temperature Range	Topr	-40 ~ +85	°C
Storage Temperature Range	Tstg	-50 ~ +150	°C

(note1) At on PC board.

In the case of Step-Down and Inverting Conversion with the internal power transistor, the Output Voltage must be set lower than 6V(-6V).

■POWER DISSIPATION vs. AMBIENT TEMPERATURE

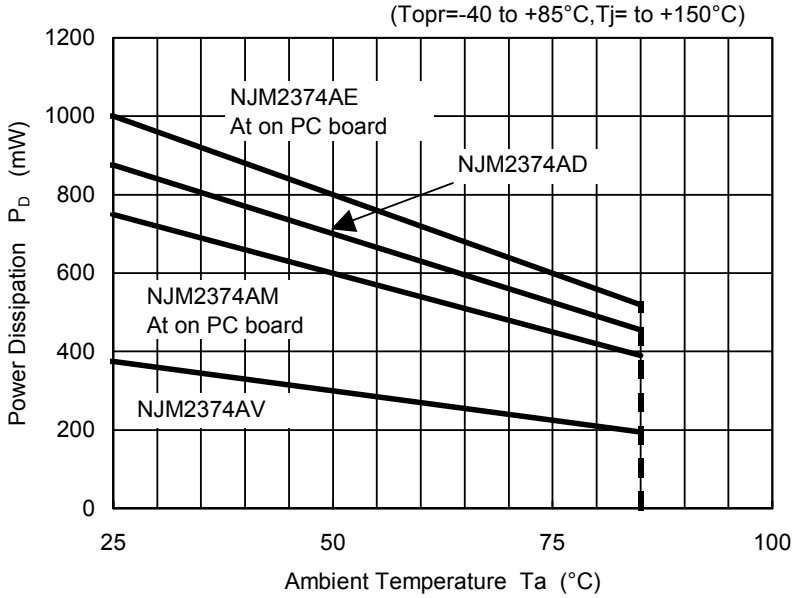

In the case of SSOP packaging, the power dissipation should carefully be considered when designing this parts.

■ELECTRICAL CHARACTERISTICS

DC Characteristics (V^+=5V, Ta=25°C)

PARAMETER	SYMBOL	TEST CONDITIONS	MIN.	TYP.	MAX.	UNIT
Operating Current 1	I_{CC1}	C_T=1nF, S_I=V^+, IN^+> V_{th}, E_S=GND	–	2.8	4.0	mA
Operating Current 2 (NJM2374AE Only)	I_{CC2}	V^+=48V, C_T=1nF, S_I=V^+, IN^+> V_{th}, E_S=GND	–	3.4	4.5	mA
Charge Current	I_{chg}		12	20	30	µA
Discharge Current	I_{dis}		110	180	300	µA
Voltage Swing	V_{OSC}		–	0.5	–	V_{P-P}
Discharge to Charge Current Ratio	I_{ratio}	S_I=V^+	–	9	–	–
Peak Current Sense Voltage	V_{ipk}	I_{chg}=I_{dis}	250	300	350	mV
Saturation Voltage 1	V_{sat1}	Darlington Connection (C_S=C_D), I_{SW}=0.7A	–	1.0	1.3	V
Saturation Voltage 2	V_{sat2}	I_{SW}=0.7A, Ic(driver)=50mA (Forced β≈14)	–	0.5	0.7	V
Output Transistor Bias Resistance	R_{bias}		–	160	–	Ω
DC Voltage Gain	h_{FE}	I_{SW}=0.7A, V_{CE}=5.0V	35	120	–	–
Collector Off-State Current	$I_{C(Off)}$	V_{CE}=40V (NJM2374AE: V_{CE}=48V)	–	10	–	nA
Threshold Voltage	V_{th}		1.225	1.250	1.275	V
Input Bias Current	I_{IB}	IN^+=0V	–	40	400	nA

(note) Output switch tests are performed under pulsed conditions to minimize power dissipation.

■TIMING CHART

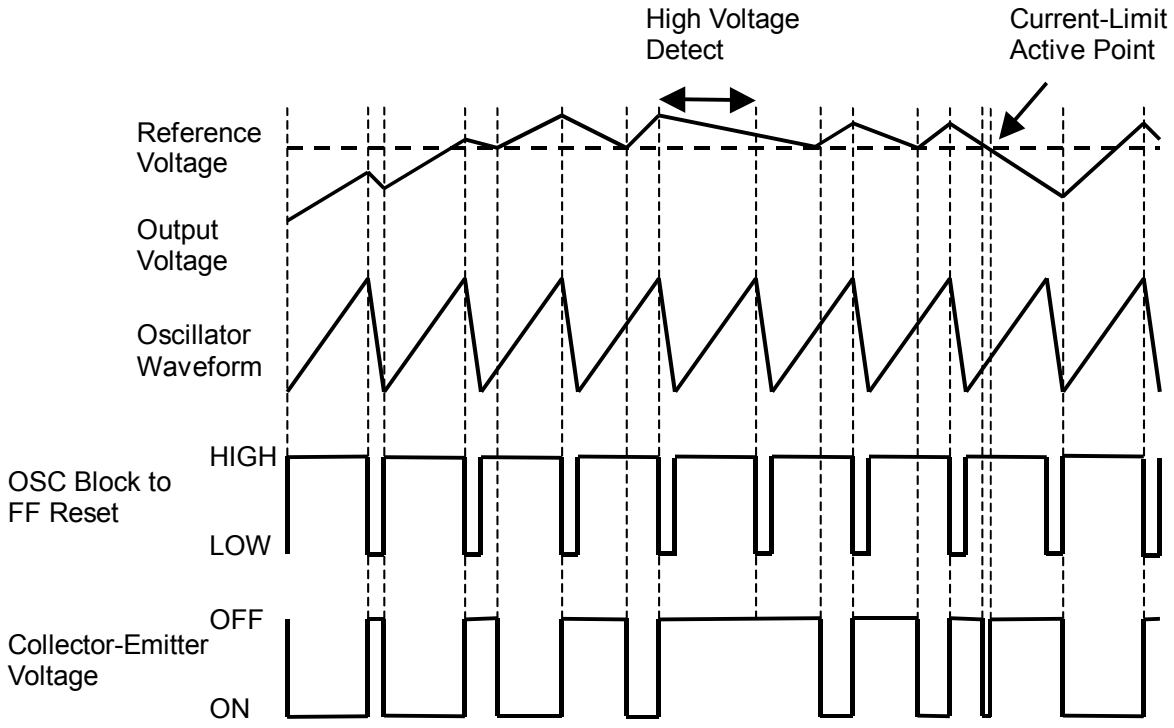

■TIPICAL CHARACTERISTICS

Oscillator Frequency vs. Timing Capacitor
(V^+=5V,S_I=V^+,Pin5=GND,Ta=25°C)

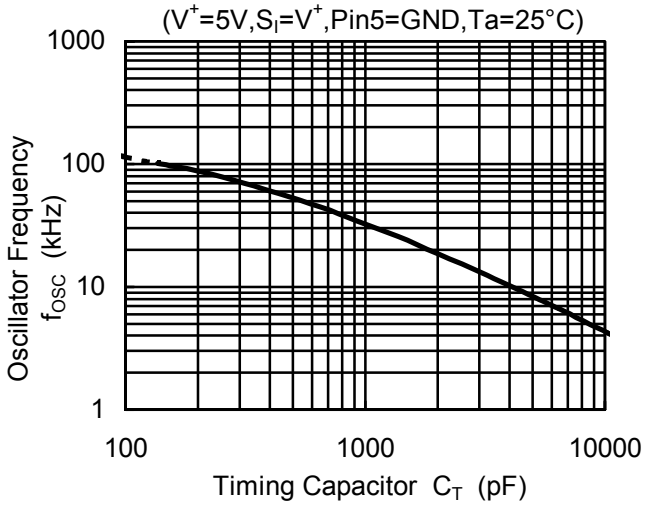

Switch ON/OFF Time vs. Timing Capacitor
(V^+=5V,S_I=V^+,Pin5=GND,Ta=25°C)

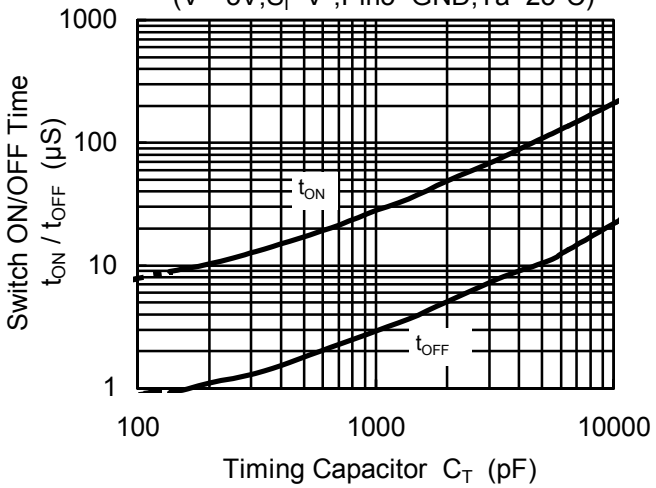

Saturation Voltage 1 vs. Collector Current
(V^+=5V,C_S=C_D,Ta=25°C)

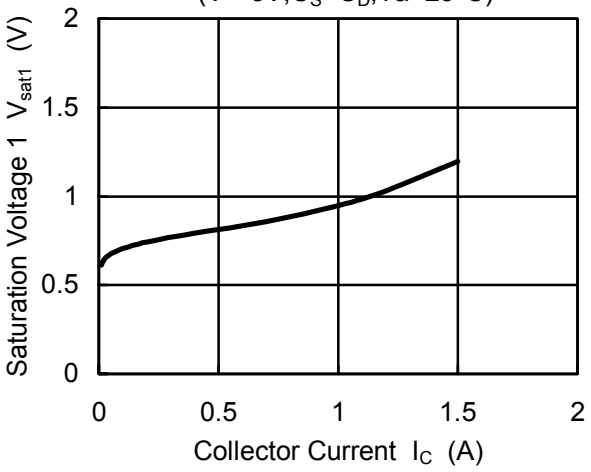

Saturation Voltage 2 vs. Collector Current
(V^+=5V,Ic(driver)=50mA,β=14,Ta=25°C)

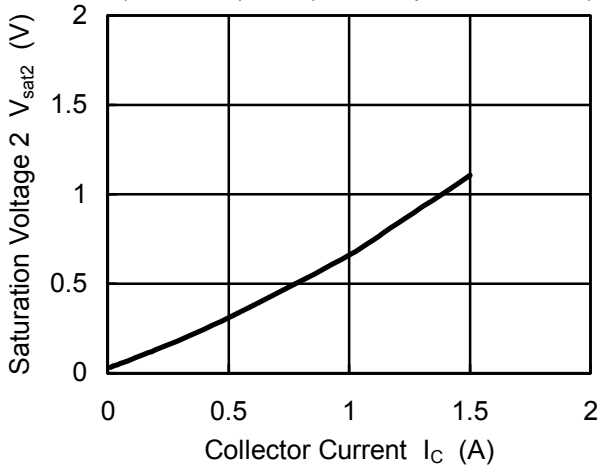

Operating Current vs. Operating Voltage
(C_T=1nF,S_I=V^+,IN^+>V_{th},E_S=GND,Ta=25°C)

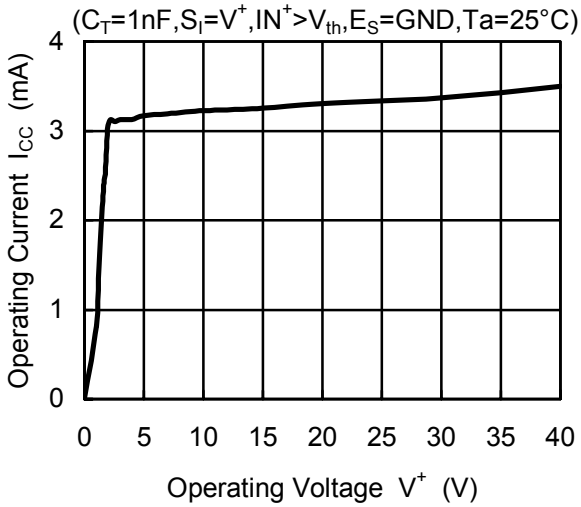

■TIPICAL CHARACTERISTICS

Threshold Voltage vs. Temperature
(V^+=5V)

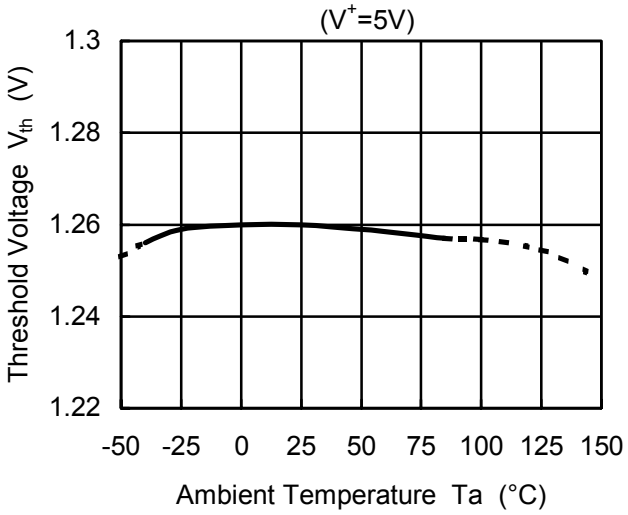

Discharge to Charge Current Ratio vs. Temperature (V^+=5V,S_I=V^+)

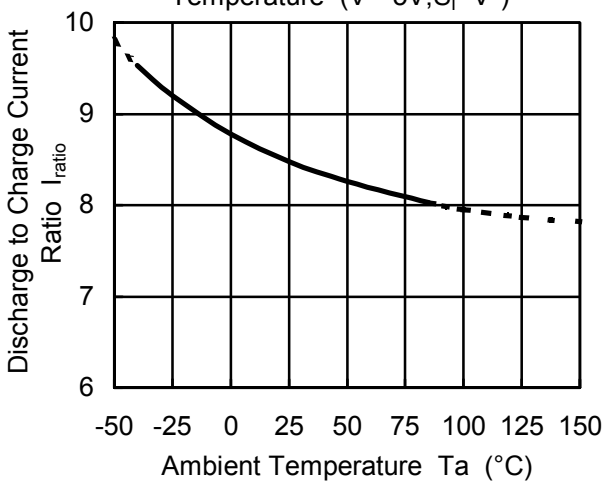

Saturation Voltage 1 vs. Temperature
(V^+=5V,C_S=C_D,I_{SW}=0.7A)

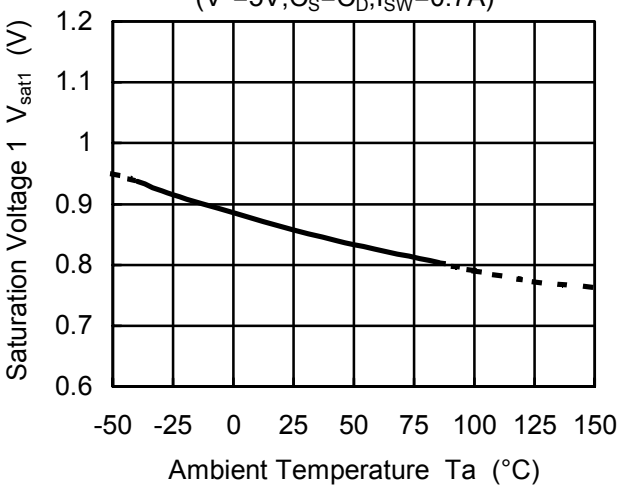

Saturation Voltage 2 vs. Temperature
(V^+=5V,I_{SW}=0.7A,Ic(driver)=50mA,β=14)

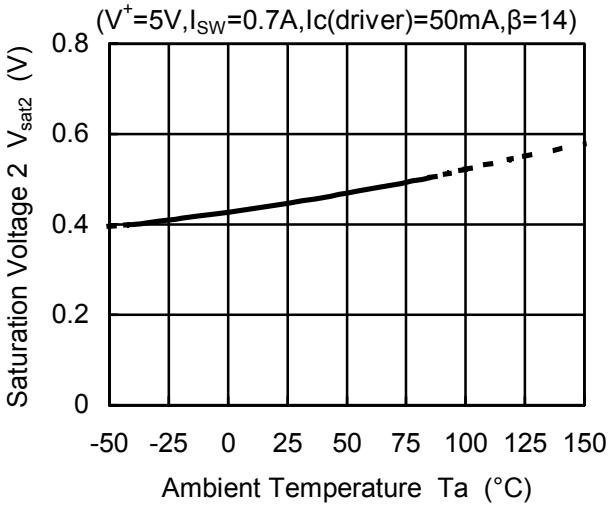

Operating Current vs. Temperature
(V^+=5V,C_T=1nF,S_I=V^+,IN^+>Vth,E_S=GND)

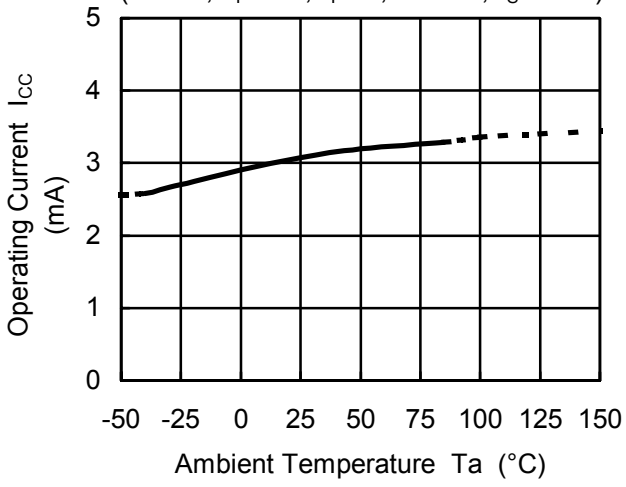

■TYPICAL APPLICATIONS

Step-Down Converter

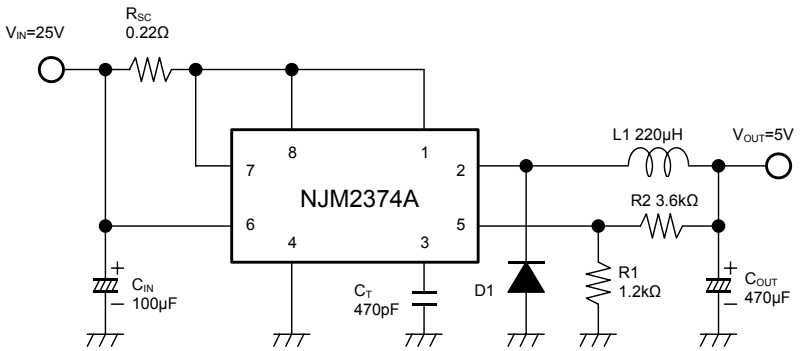

In the case of Step-Down Conversion with the internal power transistor, the Output Voltage must be set lower than 6V.

Step-Up Converter

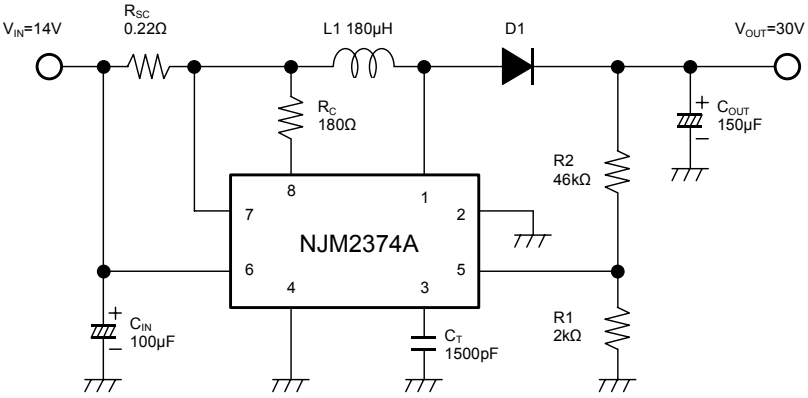

Inverting Converter

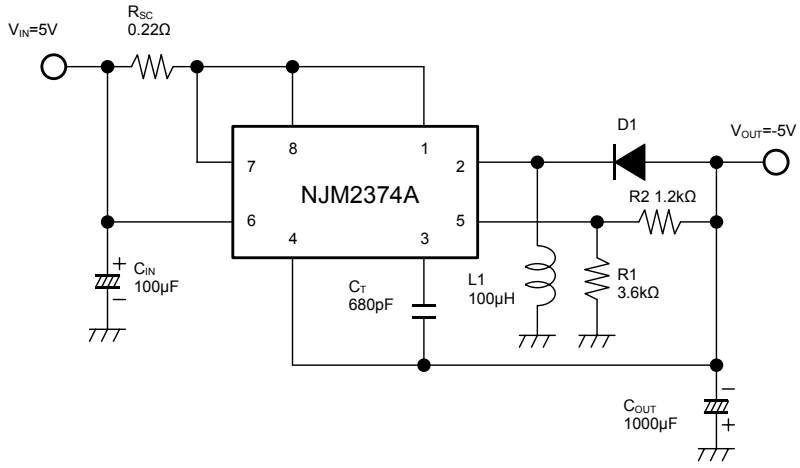

In the case of Inverting Conversion with the internal power transistor, the Output Voltage must be set lower than -6V.

D1 use to schottky diode.
In the case of SSOP packaging, the power dissipation should carefully be considered when designing this parts.

Step-Down Converter (High Current)

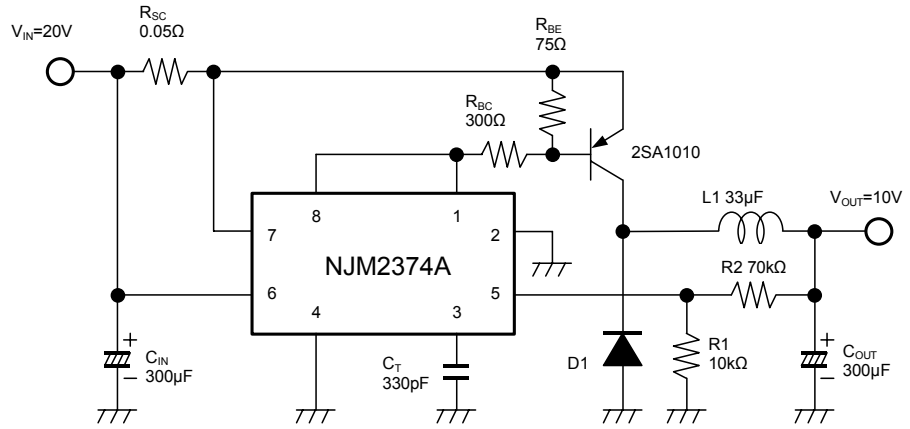

Step-Up Converter (High Current)

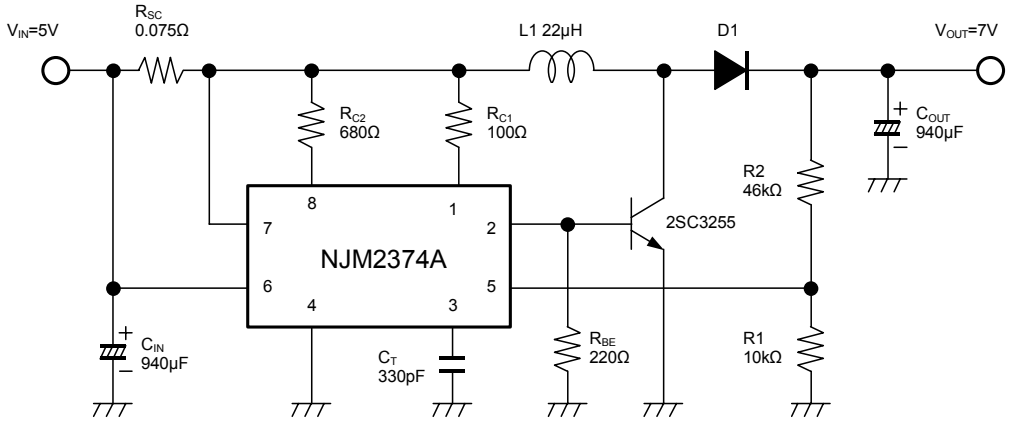

D1 use to schottky diode.

[CAUTION]
The specifications on this databook are only given for information , without any guarantee as regards either mistakes or omissions. The application circuits in this databook are described only to show representative usages of the product and not intended for the guarantee or permission of any right including the industrial rights.

ENTEGRECİ

Bu belge www.entegreci.com üzerinden sunulmaktadır.

Elektronik komponent tedarikinde Entegreci

Entegreci, Eskişehir merkezli, Türkiye geneline satış yapan bir elektronik komponent mağazasıdır. Entegreler (IC), mikrodenetleyiciler, transistörler, diyotlar, pasif elemanlar, konnektörler, modüller ve geliştirme kartları tek adetten seri üretim adetlerine kadar satılır. Ürün sayfalarında güncel stok durumunu, fiyatı ve datasheet bağlantısını bulabilirsiniz.

Parça koduyla arama

Üretici parça numarasını yazın; stok ve fiyatı hemen görün.

www.entegreci.com

Ürün kategorileri

Entegreden kapasitöre tüm elektronik komponent kategorileri.

Kategorilere göz atın

Üreticiler

Aradığınız üreticinin ürünlerini tek sayfada inceleyin.

Üreticileri görün

Toplu alım ve teklif

Listede olmayan ya da yüksek adetli parçalar için teklif isteyin.

Teklif isteyin

www.entegreci.com | **destek@entegreci.com** | **0850 305 90 34**

Entegreci is an online electronic components store based in Türkiye. Search by manufacturer part number to see stock, prices and datasheets for integrated circuits, microcontrollers, transistors, passive components and connectors, or request a quote for parts that are not listed.

Bu sayfa Entegreci tarafından eklenmiştir. Belgenin önceki sayfaları asıl yayıncısına aittir ve içeriği değiştirilmemiştir; en güncel sürüm için belgenin yayıncısına başvurun.