T-43-21



National Semiconductor

# MM54HC00/MM74HC00 Quad 2-Input NAND Gate

## General Description

These NAND gates utilize advanced silicon-gate CMOS technology to achieve operating speeds similar to LS-TTL gates with the low power consumption of standard CMOS integrated circuits. All gates have buffered outputs. All devices have high noise immunity and the ability to drive 10 LS-TTL loads. The 54HC/74HC logic family is functionally as well as pin-out compatible with the standard 54LS/74LS logic family. All inputs are protected from damage due to static discharge by internal diode clamps to $V_{CC}$ and ground.

## Features

- Typical propagation delay: 8 ns
- Wide power supply range: 2–6V
- Low quiescent current: 20 μA maximum (74HC Series)
- Low input current: 1 μA maximum
- Fanout of 10 LS-TTL loads

## Connection and Logic Diagrams

**Dual-In-Line Package**

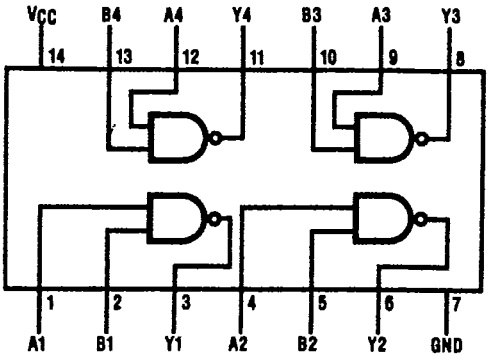


TL/F/5292–1

**Top View**

**Order Number MM54HC00* or MM74HC00***

*Please look into Section 8, Appendix D for availability of various package types.

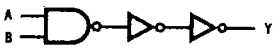


TL/F/5292–2

## Absolute Maximum Ratings (Notes 1 & 2)

**If Military/Aerospace specified devices are required, contact the National Semiconductor Sales Office/ Distributors for availability and specifications.**

| | |
|---|---|
| Supply Voltage ($V_{CC}$) | −0.5 to +7.0V |
| DC Input Voltage ($V_{IN}$) | −1.5 to $V_{CC}$+1.5V |
| DC Output Voltage ($V_{OUT}$) | −0.5 to $V_{CC}$+0.5V |
| Clamp Diode Current ($I_{IK}$, $I_{OK}$) | ±20 mA |
| DC Output Current, per pin ($I_{OUT}$) | ±25 mA |
| DC $V_{CC}$ or GND Current, per pin ($I_{CC}$) | ±50 mA |
| Storage Temperature Range ($T_{STG}$) | −65°C to +150°C |
| Power Dissipation ($P_D$) (Note 3) | 600 mW |
| S.O. Package only | 500 mW |
| Lead Temperature ($T_L$) (Soldering 10 seconds) | 260°C |

## Operating Conditions T-43-21

| | Min | Max | Units |
|---|---|---|---|
| Supply Voltage ($V_{CC}$) | 2 | 6 | V |
| DC Input or Output Voltage ($V_{IN}$, $V_{OUT}$) | 0 | $V_{CC}$ | V |
| Operating Temp. Range ($T_A$) | | | |
| MM74HC | −40 | +85 | °C |
| MM54HC | −55 | +125 | °C |
| Input Rise or Fall Times ($t_r$, $t_f$) $V_{CC}$=2V | | 1000 | ns |
| $V_{CC}$=4.5V | | 500 | ns |
| $V_{CC}$=6.0V | | 400 | ns |

## DC Electrical Characteristics (Note 4)

| Symbol | Parameter | Conditions | $V_{CC}$ | $T_A$=25°C | 74HC $T_A$=−40 to 85°C | 54HC $T_A$=−55 to 125°C | Units |
|---|---|---|---|---|---|---|---|
| | | | | Typ | Guaranteed Limits | | |
| $V_{IH}$ | Minimum High Level Input Voltage | | 2.0V | | 1.5 | 1.5 | 1.5 | V |
| | | | 4.5V | | 3.15 | 3.15 | 3.15 | V |
| | | | 6.0V | | 4.2 | 4.2 | 4.2 | V |
| $V_{IL}$ | Maximum Low Level Input Voltage** | | 2.0V | | 0.5 | 0.5 | 0.5 | V |
| | | | 4.5V | | 1.35 | 1.35 | 1.35 | V |
| | | | 6.0V | | 1.8 | 1.8 | 1.8 | V |
| $V_{OH}$ | Minimum High Level Output Voltage | $V_{IN}=V_{IH}$ or $V_{IL}$ $\lvert I_{OUT}\rvert \le 20\ \mu A$ | 2.0V | 2.0 | 1.9 | 1.9 | 1.9 | V |
| | | | 4.5V | 4.5 | 4.4 | 4.4 | 4.4 | V |
| | | | 6.0V | 6.0 | 5.9 | 5.9 | 5.9 | V |
| | | $V_{IN}=V_{IH}$ or $V_{IL}$ $\lvert I_{OUT}\rvert \le 4.0$ mA $\lvert I_{OUT}\rvert \le 5.2$ mA | 4.5V | 4.2 | 3.98 | 3.84 | 3.7 | V |
| | | | 6.0V | 5.7 | 5.48 | 5.34 | 5.2 | V |
| $V_{OL}$ | Maximum Low Level Output Voltage | $V_{IN}=V_{IH}$ $\lvert I_{OUT}\rvert \le 20\ \mu A$ | 2.0V | 0 | 0.1 | 0.1 | 0.1 | V |
| | | | 4.5V | 0 | 0.1 | 0.1 | 0.1 | V |
| | | | 6.0V | 0 | 0.1 | 0.1 | 0.1 | V |
| | | $V_{IN}=V_{IH}$ $\lvert I_{OUT}\rvert \le 4.0$ mA $\lvert I_{OUT}\rvert \le 5.2$ mA | 4.5V | 0.2 | 0.26 | 0.33 | 0.4 | V |
| | | | 6.0V | 0.2 | 0.26 | 0.33 | 0.4 | V |
| $I_{IN}$ | Maximum Input Current | $V_{IN}=V_{CC}$ or GND | 6.0V | | ±0.1 | ±1.0 | ±1.0 | μA |
| $I_{CC}$ | Maximum Quiescent Supply Current | $V_{IN}=V_{CC}$ or GND $I_{OUT}=0\ \mu A$ | 6.0V | | 2.0 | 20 | 40 | μA |

**Note 1:** Absolute Maximum Ratings are those values beyond which damage to the device may occur.

**Note 2:** Unless otherwise specified all voltages are referenced to ground.

**Note 3:** Power Dissipation temperature derating — plastic "N" package: −12 mW/°C from 65°C to 85°C; ceramic "J" package: −12 mW/°C from 100°C to 125°C.

**Note 4:** For a power supply of 5V ±10% the worst case output voltages ($V_{OH}$, and $V_{OL}$) occur for HC at 4.5V. Thus the 4.5V values should be used when designing with this supply. Worst case $V_{IH}$ and $V_{IL}$ occur at $V_{CC}$=5.5V and 4.5V respectively. (The $V_{IH}$ value at 5.5V is 3.85V.) The worst case leakage current ($I_{IN}$, $I_{CC}$, and $I_{OZ}$) occur for CMOS at the higher voltage and so the 6.0V values should be used.

**$V_{IL}$ limits are currently tested at 20% of $V_{CC}$. The above $V_{IL}$ specification (30% of $V_{CC}$) will be implemented no later than Q1, CY'89.

T-43-21



## AC Electrical Characteristics $V_{CC}=5V$, $T_A=25°C$, $C_L=15$ pF, $t_r=t_f=6$ ns

| Symbol | Parameter | Conditions | Typ | Guaranteed Limit | Units |
|---|---|---|---|---|---|
| $t_{PHL}$, $t_{PLH}$ | Maximum Propagation Delay | | 8 | 15 | ns |

## AC Electrical Characteristics $V_{CC}=2.0V$ to $6.0V$, $C_L=50$ pF, $t_r=t_f=6$ ns (unless otherwise specified)

| Symbol | Parameter | Conditions | $V_{CC}$ | $T_A=25°C$ | 74HC $T_A=-40$ to $85°C$ | 54HC $T_A=-55$ to $125°C$ | Units |
|---|---|---|---|---|---|---|---|
| | | | | Typ | Guaranteed Limits | | |
| $t_{PHL}$, $t_{PLH}$ | Maximum Propagation Delay | | 2.0V | 45 | 90 | 113 | 134 | ns |
| | | | 4.5V | 9 | 18 | 23 | 27 | ns |
| | | | 6.0V | 8 | 15 | 19 | 23 | ns |
| $t_{TLH}$, $t_{THL}$ | Maximum Output Rise and Fall Time | | 2.0V | 30 | 75 | 95 | 110 | ns |
| | | | 4.5V | 8 | 15 | 19 | 22 | ns |
| | | | 6.0V | 7 | 13 | 16 | 19 | ns |
| $C_{PD}$ | Power Dissipation Capacitance (Note 5) | (per gate) | | 20 | | | | pF |
| $C_{IN}$ | Maximum Input Capacitance | | | 5 | 10 | 10 | 10 | pF |

**Note 5:** $C_{PD}$ determines the no load dynamic power consumption, $P_D=C_{PD}\,V_{CC}^2\,f+I_{CC}\,V_{CC}$, and the no load dynamic current consumption, $I_S=C_{PD}\,V_{CC}\,f+I_{CC}$.

3

ENTEGRECİ

Bu belge www.entegreci.com üzerinden sunulmaktadır.

# Elektronik komponent tedarikinde Entegreci

Entegreci, Eskişehir merkezli, Türkiye geneline satış yapan bir elektronik komponent mağazasıdır. Entegreler (IC), mikrodenetleyiciler, transistörler, diyotlar, pasif elemanlar, konnektörler, modüller ve geliştirme kartları tek adetten seri üretim adetlerine kadar satılır. Ürün sayfalarında güncel stok durumunu, fiyatı ve datasheet bağlantısını bulabilirsiniz.

### Parça koduyla arama

Üretici parça numarasını yazın; stok ve fiyatı hemen görün.

**www.entegreci.com**

### Ürün kategorileri

Entegreden kapasitöre tüm elektronik komponent kategorileri.

**Kategorilere göz atın**

### Üreticiler

Aradığınız üreticinin ürünlerini tek sayfada inceleyin.

**Üreticileri görün**

### Toplu alım ve teklif

Listede olmayan ya da yüksek adetli parçalar için teklif isteyin.

**Teklif isteyin**

**www.entegreci.com** | **destek@entegreci.com** | **0850 305 90 34**

Entegreci is an online electronic components store based in Türkiye. Search by manufacturer part number to see stock, prices and datasheets for integrated circuits, microcontrollers, transistors, passive components and connectors, or request a quote for parts that are not listed.

Bu sayfa Entegreci tarafından eklenmiştir. Belgenin önceki sayfaları asıl yayıncısına aittir ve içeriği değiştirilmemiştir; en güncel sürüm için belgenin yayıncısına başvurun.