MC14023B (see Page 6-5)
MC14023UB (see Page 6-14)

MC14024B

7-Stage Ripple Counter

The MC14024B is a 7–stage ripple counter with short propagation delays and high maximum clock rates. The Reset input has standard noise immunity, however the Clock input has increased noise immunity due to Hysteresis. The output of each counter stage is buffered.

- Diode Protection on All Inputs
- Output Transitions Occur on the Falling Edge of the Clock Pulse
- Supply Voltage Range = 3.0 Vdc to 18 Vdc
- Capable of Driving Two Low–power TTL Loads or One Low–power Schottky TTL Load Over the Rated Temperature Range
- Pin–for–Pin Replacement for CD4024B

MAXIMUM RATINGS* (Voltages Referenced to V_{SS})

Symbol	Parameter	Value	Unit
V_{DD}	DC Supply Voltage	– 0.5 to + 18.0	V
V_{in}, V_{out}	Input or Output Voltage (DC or Transient)	– 0.5 to V_{DD} + 0.5	V
I_{in}, I_{out}	Input or Output Current (DC or Transient), per Pin	± 10	mA
P_D	Power Dissipation, per Package†	500	mW
T_{stg}	Storage Temperature	– 65 to + 150	°C
T_L	Lead Temperature (8–Second Soldering)	260	°C

* Maximum Ratings are those values beyond which damage to the device may occur.
†Temperature Derating:
Plastic “P and D/DW” Packages: – 7.0 mW/°C From 65°C To 125°C
Ceramic “L” Packages: – 12 mW/°C From 100°C To 125°C

LOGIC DIAGRAM

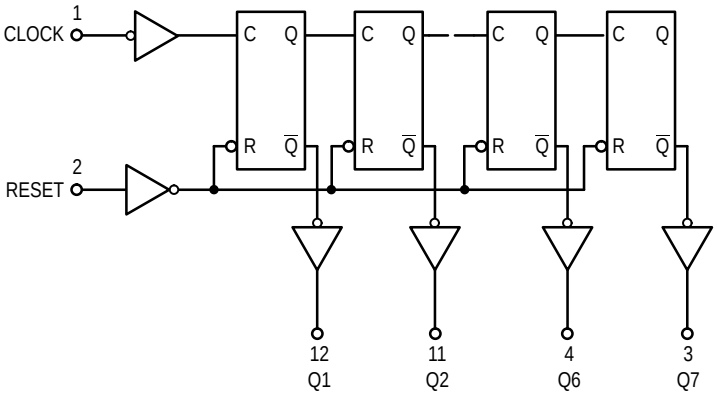

Q3 = PIN 9
Q4 = PIN 6
Q5 = PIN 5

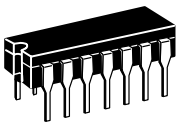

L SUFFIX
CERAMIC
CASE 632

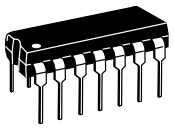

P SUFFIX
PLASTIC
CASE 646



D SUFFIX
SOIC
CASE 751A

ORDERING INFORMATION

MC14XXXBCP	Plastic
MC14XXXBCL	Ceramic
MC14XXXBD	SOIC

T_A = – 55° to 125°C for all packages.

PIN ASSIGNMENT

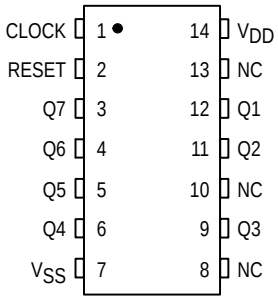

V_{DD} = PIN 14
V_{SS} = PIN 7
NC = NO CONNECTION

© Motorola, Inc. 1995

ELECTRICAL CHARACTERISTICS (Voltages Referenced to V_{SS})

Characteristic	Symbol	V_{DD} Vdc	– 55°C Min	– 55°C Max	25°C Min	25°C Typ #	25°C Max	125°C Min	125°C Max	Unit
Output Voltage "0" Level	V_{OL}	5.0	—	0.05	—	0	0.05	—	0.05	Vdc
V_{in} = V_{DD} or 0		10	—	0.05	—	0	0.05	—	0.05	
		15	—	0.05	—	0	0.05	—	0.05	
V_{in} = 0 or V_{DD} "1" Level	V_{OH}	5.0	4.95	—	4.95	5.0	—	4.95	—	Vdc
		10	9.95	—	9.95	10	—	9.95	—	
		15	14.95	—	14.95	15	—	14.95	—	
Input Voltage "0" Level	V_{IL}									Vdc
(V_O = 4.5 or 0.5 Vdc)		5.0	—	1.5	—	2.25	1.5	—	1.5	
(V_O = 9.0 or 1.0 Vdc)		10	—	3.0	—	4.50	3.0	—	3.0	
(V_O = 13.5 or 1.5 Vdc)		15	—	4.0	—	6.75	4.0	—	4.0	
(V_O = 0.5 or 4.5 Vdc) "1" Level	V_{IH}	5.0	3.5	—	3.5	2.75	—	3.5	—	Vdc
(V_O = 1.0 or 9.0 Vdc)		10	7.0	—	7.0	5.50	—	7.0	—	
(V_O = 1.5 or 13.5 Vdc)		15	11	—	11	8.25	—	11	—	
Output Drive Current	I_{OH}									mAdc
(V_{OH} = 2.5 Vdc) Source		5.0	– 3.0	—	– 2.4	– 4.2	—	– 1.7	—	
(V_{OH} = 4.6 Vdc)		5.0	– 0.64	—	– 0.51	– 0.88	—	– 0.36	—	
(V_{OH} = 9.5 Vdc)		10	– 1.6	—	– 1.3	– 2.25	—	– 0.9	—	
(V_{OH} = 13.5 Vdc)		15	– 4.2	—	– 3.4	– 8.8	—	– 2.4	—	
(V_{OL} = 0.4 Vdc) Sink	I_{OL}	5.0	0.64	—	0.51	0.88	—	0.36	—	mAdc
(V_{OL} = 0.5 Vdc)		10	1.6	—	1.3	2.25	—	0.9	—	
(V_{OL} = 1.5 Vdc)		15	4.2	—	3.4	8.8	—	2.4	—	
Input Current	I_{in}	15	—	± 0.1	—	±0.00001	± 0.1	—	± 1.0	µAdc
Input Capacitance (V_{in} = 0)	C_{in}	—	—	—	—	5.0	7.5	—	—	pF
Quiescent Current (Per Package)	I_{DD}	5.0	—	5.0	—	0.005	5.0	—	150	µAdc
		10	—	10	—	0.010	10	—	300	
		15	—	20	—	0.015	20	—	600	
Total Supply Current**† (Dynamic plus Quiescent, Per Package) (C_L = 50 pF on all outputs, all buffers switching)	I_T	5.0	I_T = (0.31 µA/kHz) f + I_{DD}							µAdc
		10	I_T = (0.60 µA/kHz) f + I_{DD}							
		15	I_T = (1.89 µA/kHz) f + I_{DD}							

#Data labelled "Typ" is not to be used for design purposes but is intended as an indication of the IC's potential performance.

**The formulas given are for the typical characteristics only at 25°C.

†To calculate total supply current at loads other than 50 pF:

$$I_T(C_L) = I_T(50\ pF) + (C_L - 50)\ Vfk$$

where: I_T is in µA (per package), C_L in pF, V = (V_{DD} – V_{SS}) in volts, f in kHz is input frequency, and k = 0.001.

This device contains protection circuitry to guard against damage due to high static voltages or electric fields. However, precautions must be taken to avoid applications of any voltage higher than maximum rated voltages to this high-impedance circuit. For proper operation, V_{in} and V_{out} should be constrained to the range $V_{SS} \le (V_{in}$ or $V_{out}) \le V_{DD}$.

Unused inputs must always be tied to an appropriate logic voltage level (e.g., either V_{SS} or V_{DD}). Unused outputs must be left open.

SWITCHING CHARACTERISTICS* (C_L = 50 pF, T_A = 25°C)

Characteristic	Symbol	V_{DD}	Min	Typ #	Max	Unit
Output Rise and Fall Time	t_{TLH},					ns
t_{TLH}, t_{THL} = (1.5 ns/pF) C_L + 25 ns	t_{THL}	5.0	—	100	200	
t_{TLH}, t_{THL} = (0.75 ns/pF) C_L + 12.5 ns		10	—	50	100	
t_{TLH}, t_{THL} = (0.55 ns/pF) C_L + 9.5 ns		15	—	40	80	
Propagation Delay Time	t_{PLH},					ns
Clock to Q1	t_{PHL}					
t_{PLH}, t_{PHL} = (1.7 ns/pF) C_L + 295 ns		5.0	—	380	600	
t_{PLH}, t_{PHL} = (0.66 ns/pF) C_L + 117 ns		10	—	150	230	
t_{PLH}, t_{PHL} = (0.5 ns/pF) C_L + 85 ns		15	—	110	175	
Clock to Q7						
t_{PLH}, t_{PHL} = (1.7 ns/pF) C_L + 915 ns		5.0	—	1000	2000	
t_{PLH}, t_{PHL} = (0.66 ns/pF) C_L + 367 ns		10	—	400	750	
t_{PLH}, t_{PHL} = (0.5 ns/pF) C_L + 275 ns		15	—	300	565	
Reset to Q_n						
t_{PLH}, t_{PHL} = (1.7 ns/pF) C_L + 415 ns		5.0	—	500	800	
t_{PLH}, t_{PHL} = (0.66 ns/pF) C_L + 217 ns		10	—	250	400	
t_{PLH}, t_{PHL} = (0.5 ns/pF) C_L + 155 ns		15	—	180	300	
Clock Pulse Width	t_{WH}	5.0	500	200	—	ns
		10	165	60	—	
		15	125	40	—	
Reset Pulse Width	t_{WH}	5.0	600	375	—	ns
		10	350	200	—	
		15	260	150	—	
Reset Removal Time	t_{rem}	5.0	625	250	—	ns
		10	190	75	—	
		15	145	50	—	
Clock Input Rise and Fall Time	t_{TLH}, t_{THL}	5.0	—	—	1.0	s
		10	—	—	8.0	ms
		15	—	—	200	µs
Input Pulse Frequency	f_{cl}	5.0	—	2.5	1.0	MHz
		10	—	8.0	3.0	
		15	—	12	4.0	

* The formulas given are for the typical characteristics only at 25°C.
#Data labelled “Typ” is not to be used for design purposes but is intended as an indication of the IC’s potential performance.

TRUTH TABLE

Clock	Reset	State
0	0	No Change
0	1	All Outputs Low
1	0	No Change
1	1	All Outputs Low
⎍	0	No Change
⎍	1	All Outputs Low
⎏	0	Advance One Count
⎏	1	All Outputs Low

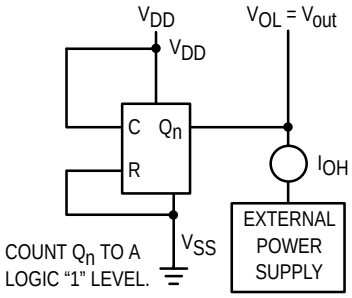

Figure 1. Typical Output Source Characteristics Test Circuit

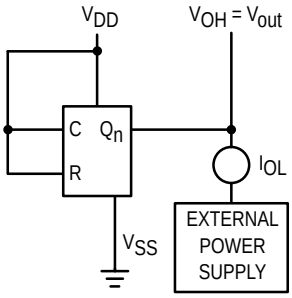

Figure 2. Typical Output Sink Characteristics Test Circuit

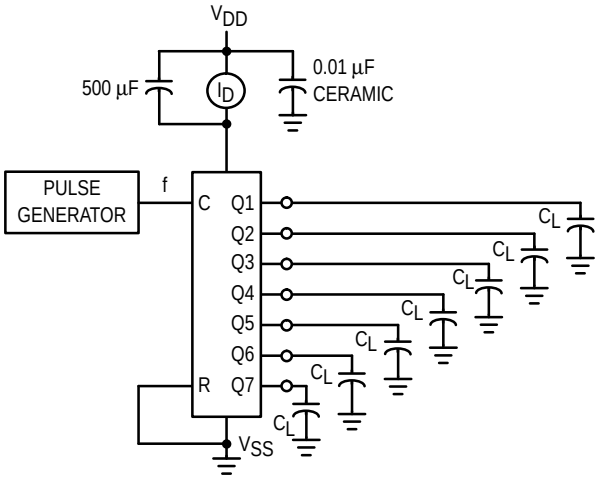

Figure 3. Power Dissipation Test Circuit

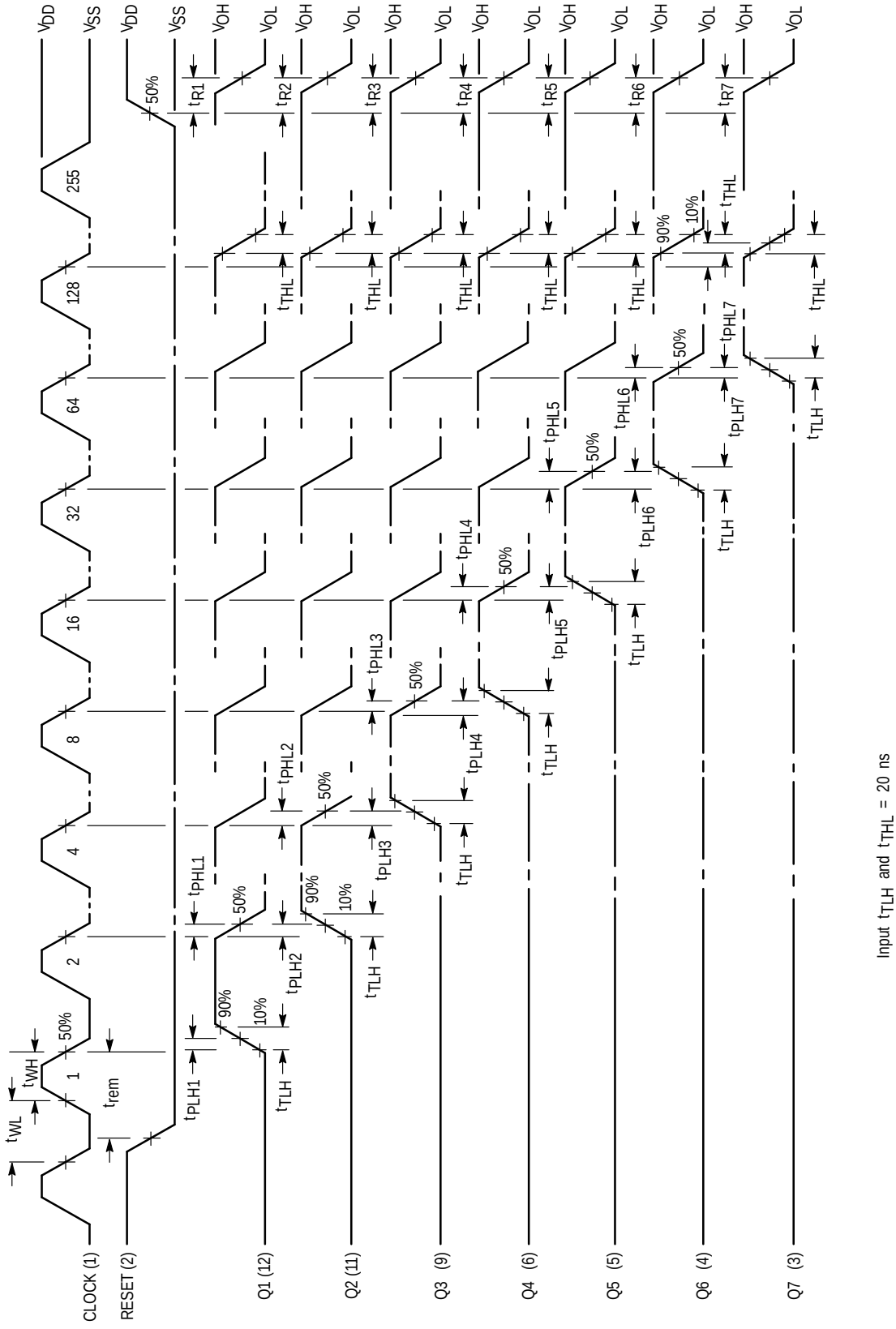

Figure 4. Functional Waveforms

OUTLINE DIMENSIONS

L SUFFIX
CERAMIC DIP PACKAGE
CASE 632–08
ISSUE Y

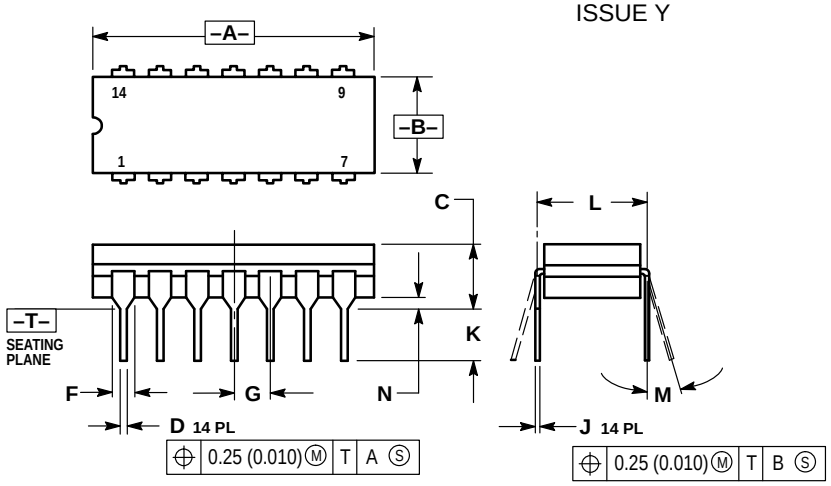

NOTES:
1. DIMENSIONING AND TOLERANCING PER ANSI Y14.5M, 1982.
2. CONTROLLING DIMENSION: INCH.
3. DIMENSION L TO CENTER OF LEAD WHEN FORMED PARALLEL.
4. DIMENSION F MAY NARROW TO 0.76 (0.030) WHERE THE LEAD ENTERS THE CERAMIC BODY.

	INCHES		MILLIMETERS	
DIM	MIN	MAX	MIN	MAX
A	0.750	0.785	19.05	19.94
B	0.245	0.280	6.23	7.11
C	0.155	0.200	3.94	5.08
D	0.015	0.020	0.39	0.50
F	0.055	0.065	1.40	1.65
G	0.100 BSC		2.54 BSC	
J	0.008	0.015	0.21	0.38
K	0.125	0.170	3.18	4.31
L	0.300 BSC		7.62 BSC	
M	0°	15°	0°	15°
N	0.020	0.040	0.51	1.01

P SUFFIX
PLASTIC DIP PACKAGE
CASE 646–06
ISSUE L

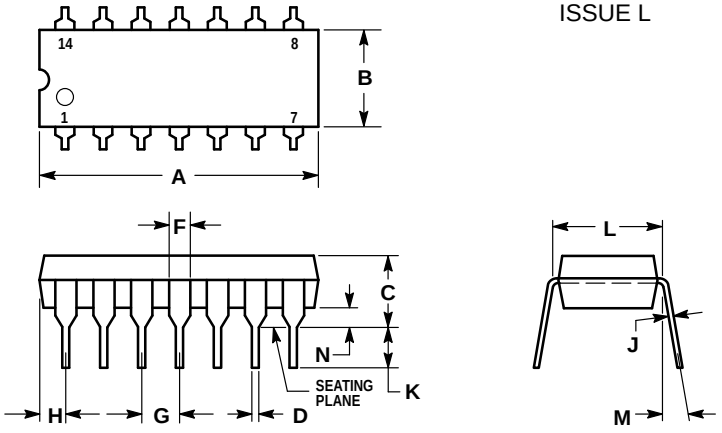

NOTES:
1. LEADS WITHIN 0.13 (0.005) RADIUS OF TRUE POSITION AT SEATING PLANE AT MAXIMUM MATERIAL CONDITION.
2. DIMENSION L TO CENTER OF LEADS WHEN FORMED PARALLEL.
3. DIMENSION B DOES NOT INCLUDE MOLD FLASH.
4. ROUNDED CORNERS OPTIONAL.

	INCHES		MILLIMETERS	
DIM	MIN	MAX	MIN	MAX
A	0.715	0.770	18.16	19.56
B	0.240	0.260	6.10	6.60
C	0.145	0.185	3.69	4.69
D	0.015	0.021	0.38	0.53
F	0.040	0.070	1.02	1.78
G	0.100 BSC		2.54 BSC	
H	0.052	0.095	1.32	2.41
J	0.008	0.015	0.20	0.38
K	0.115	0.135	2.92	3.43
L	0.300 BSC		7.62 BSC	
M	0°	10°	0°	10°
N	0.015	0.039	0.39	1.01

OUTLINE DIMENSIONS

D SUFFIX
PLASTIC SOIC PACKAGE
CASE 751A–03
ISSUE F

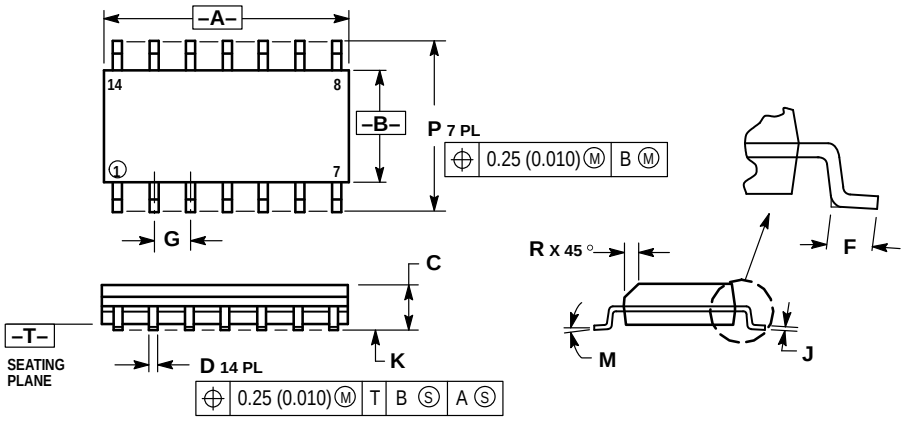

NOTES:
1. DIMENSIONING AND TOLERANCING PER ANSI Y14.5M, 1982.
2. CONTROLLING DIMENSION: MILLIMETER.
3. DIMENSIONS A AND B DO NOT INCLUDE MOLD PROTRUSION.
4. MAXIMUM MOLD PROTRUSION 0.15 (0.006) PER SIDE.
5. DIMENSION D DOES NOT INCLUDE DAMBAR PROTRUSION. ALLOWABLE DAMBAR PROTRUSION SHALL BE 0.127 (0.005) TOTAL IN EXCESS OF THE D DIMENSION AT MAXIMUM MATERIAL CONDITION.

	MILLIMETERS		INCHES	
DIM	MIN	MAX	MIN	MAX
A	8.55	8.75	0.337	0.344
B	3.80	4.00	0.150	0.157
C	1.35	1.75	0.054	0.068
D	0.35	0.49	0.014	0.019
F	0.40	1.25	0.016	0.049
G	1.27 BSC		0.050 BSC	
J	0.19	0.25	0.008	0.009
K	0.10	0.25	0.004	0.009
M	0 °	7 °	0 °	7 °
P	5.80	6.20	0.228	0.244
R	0.25	0.50	0.010	0.019

Motorola reserves the right to make changes without further notice to any products herein. Motorola makes no warranty, representation or guarantee regarding the suitability of its products for any particular purpose, nor does Motorola assume any liability arising out of the application or use of any product or circuit, and specifically disclaims any and all liability, including without limitation consequential or incidental damages. “Typical” parameters which may be provided in Motorola data sheets and/or specifications can and do vary in different applications and actual performance may vary over time. All operating parameters, including “Typicals” must be validated for each customer application by customer’s technical experts. Motorola does not convey any license under its patent rights nor the rights of others. Motorola products are not designed, intended, or authorized for use as components in systems intended for surgical implant into the body, or other applications intended to support or sustain life, or for any other application in which the failure of the Motorola product could create a situation where personal injury or death may occur. Should Buyer purchase or use Motorola products for any such unintended or unauthorized application, Buyer shall indemnify and hold Motorola and its officers, employees, subsidiaries, affiliates, and distributors harmless against all claims, costs, damages, and expenses, and reasonable attorney fees arising out of, directly or indirectly, any claim of personal injury or death associated with such unintended or unauthorized use, even if such claim alleges that Motorola was negligent regarding the design or manufacture of the part. Motorola and M are registered trademarks of Motorola, Inc. Motorola, Inc. is an Equal Opportunity/Affirmative Action Employer.

How to reach us:
USA/EUROPE/Locations Not Listed: Motorola Literature Distribution; P.O. Box 20912; Phoenix, Arizona 85036. 1–800–441–2447 or 602–303–5454

MFAX: RMFAX0@email.sps.mot.com – TOUCHTONE 602–244–6609
INTERNET: http://Design–NET.com

JAPAN: Nippon Motorola Ltd.; Tatsumi–SPD–JLDC, 6F Seibu–Butsuryu–Center, 3–14–2 Tatsumi Koto–Ku, Tokyo 135, Japan. 03–81–3521–8315

ASIA/PACIFIC: Motorola Semiconductors H.K. Ltd.; 8B Tai Ping Industrial Park, 51 Ting Kok Road, Tai Po, N.T., Hong Kong. 852–26629298

ENTEGRECİ

Bu belge www.entegreci.com üzerinden sunulmaktadır.

Elektronik komponent tedarikinde Entegreci

Entegreci, Eskişehir merkezli, Türkiye geneline satış yapan bir elektronik komponent mağazasıdır. Entegreler (IC), mikrodenetleyiciler, transistörler, diyotlar, pasif elemanlar, konnektörler, modüller ve geliştirme kartları tek adetten seri üretim adetlerine kadar satılır. Ürün sayfalarında güncel stok durumunu, fiyatı ve datasheet bağlantısını bulabilirsiniz.

Parça koduyla arama

Üretici parça numarasını yazın; stok ve fiyatı hemen görün.

www.entegreci.com

Ürün kategorileri

Entegreden kapasitöre tüm elektronik komponent kategorileri.

Kategorilere göz atın

Üreticiler

Aradığınız üreticinin ürünlerini tek sayfada inceleyin.

Üreticileri görün

Toplu alım ve teklif

Listede olmayan ya da yüksek adetli parçalar için teklif isteyin.

Teklif isteyin

www.entegreci.com | **destek@entegreci.com** | **0850 305 90 34**

Entegreci is an online electronic components store based in Türkiye. Search by manufacturer part number to see stock, prices and datasheets for integrated circuits, microcontrollers, transistors, passive components and connectors, or request a quote for parts that are not listed.

Bu sayfa Entegreci tarafından eklenmiştir. Belgenin önceki sayfaları asıl yayıncısına aittir ve içeriği değiştirilmemiştir; en güncel sürüm için belgenin yayıncısına başvurun.