FAIRCHILD SEMICONDUCTOR™

September 1986
Revised July 2001

DM7438 • 7438
Quad 2-Input NAND Buffers with Open-Collector Outputs

General Description

This device contains four independent gates each of which performs the logic NAND function. The open-collector outputs require external pull-up resistors for proper logical operation.

Pull-Up Resistor Equations

$$R_{MAX} = \frac{V_{CC}\,(Min) - V_{OH}}{N_1\,(I_{OH}) + N_2\,(I_{IH})}$$

$$R_{MIN} = \frac{V_{CC}\,(Max) - V_{OL}}{I_{OL} - N_3\,(I_{IL})}$$

Where: N_1 (I_{OH}) = total maximum output high current for all outputs tied to pull-up resistor

N_2 (I_{IH}) = total maximum input high current for all inputs tied to pull-up resistor

N_3 (I_{IL}) = total maximum input low current for all inputs tied to pull-up resistor

Ordering Code:

Order Number	Package Number	Package Description
DM7438M	M14A	14-Lead Small Outline Integrated Circuit (SOIC), JEDEC MS-012, 0.150" Narrow
DM7438N	N14A	14-Lead Plastic Dual-In-Line Package (PDIP), JEDEC MS-001, 0.300" Wide
7438SJ	M14D	14-Lead Small Outline Package (SOP), EIAJ TYPE II, 5.3mm Wide

Devices also available in Tape and Reel. Specify by appending the suffix letter "X" to the ordering code.

Connection Diagram

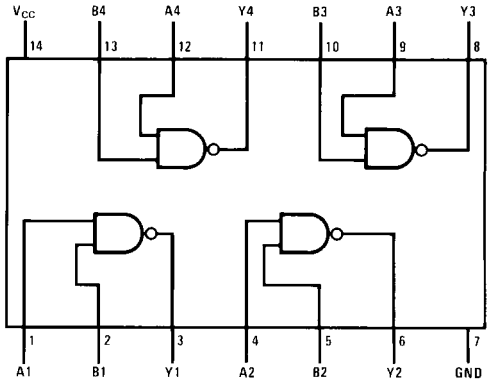

Function Table

$$Y = \overline{AB}$$

Inputs		Output
A	B	Y
L	L	H
L	H	H
H	L	H
H	H	L

H = HIGH Logic Level
L = LOW Logic Level

© 2001 Fairchild Semiconductor Corporation

Absolute Maximum Ratings(Note 1)

Supply Voltage	7V
Input Voltage	5.5V
Output Voltage	7V
Operating Free Air Temperature Range	0°C to +70°C
Storage Temperature Range	−65°C to +150°C

Note 1: The "Absolute Maximum Ratings" are those values beyond which the safety of the device cannot be guaranteed. The device should not be operated at these limits. The parametric values defined in the Electrical Characteristics tables are not guaranteed at the absolute maximum ratings. The "Recommended Operating Conditions" table will define the conditions for actual device operation.

Recommended Operating Conditions

Symbol	Parameter	Min	Nom	Max	Units
V_{CC}	Supply Voltage	4.75	5	5.25	V
V_{IH}	HIGH Level Input Voltage	2			V
V_{IL}	LOW Level Input Voltage			0.8	V
V_{OH}	HIGH Level Output Voltage			5.5	V
I_{OL}	LOW Level Output Current			48	mA
T_A	Free Air Operating Temperature	0		70	°C

Electrical Characteristics

over recommended operating free air temperature range (unless otherwise noted)

Symbol	Parameter	Conditions	Min	Typ (Note 2)	Max	Units
V_I	Input Clamp Voltage	V_{CC} = Min, I_I = −12 mA			−1.5	V
I_{CEX}	HIGH Level Output Current	V_{CC} = Min, V_O = 5.5V, V_{IL} = Max			250	µA
V_{OL}	LOW Level Output Voltage	V_{CC} = Min, I_{OL} = Max, V_{IH} = Min			0.4	V
I_I	Input Current @ Max Input Voltage	V_{CC} = Max, V_I = 5.5V			1	mA
I_{IH}	HIGH Level Input Current	V_{CC} = Max, V_I = 2.4V			40	µA
I_{IL}	LOW Level Input Current	V_{CC} = Max, V_I = 0.4V			−1.6	mA
I_{CCH}	Supply Current with Outputs HIGH	V_{CC} = Max		5	8.5	mA
I_{CCL}	Supply Current with Outputs LOW	V_{CC} = Max		34	54	mA

Switching Characteristics

at V_{CC} = 5V and T_A = 25°C

Symbol	Parameter	Conditions	Min	Max	Units
t_{PLH}	Propagation Delay Time LOW-to-HIGH Level Output	C_L = 45 pF, R_L = 133Ω		22	ns
t_{PHL}	Propagation Delay Time HIGH-to-LOW Level Output			18	ns

Note 2: All typicals are at V_{CC} = 5V, T_A = 25°C.

Physical Dimensions inches (millimeters) unless otherwise noted

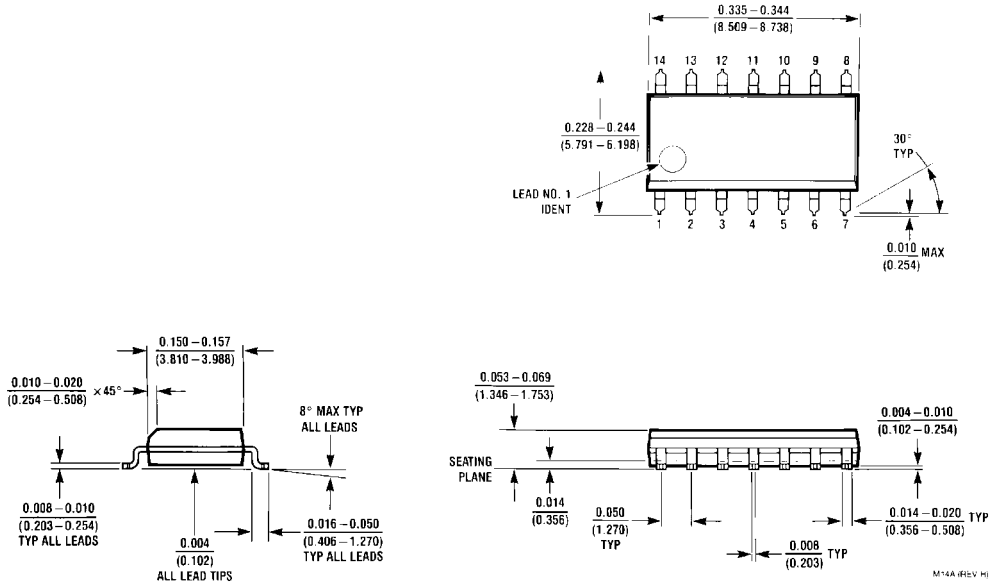

14-Lead Small Outline Integrated Circuit (SOIC), JEDEC MS-012, 0.150" Narrow
Package Number M14A

Physical Dimensions inches (millimeters) unless otherwise noted (Continued)

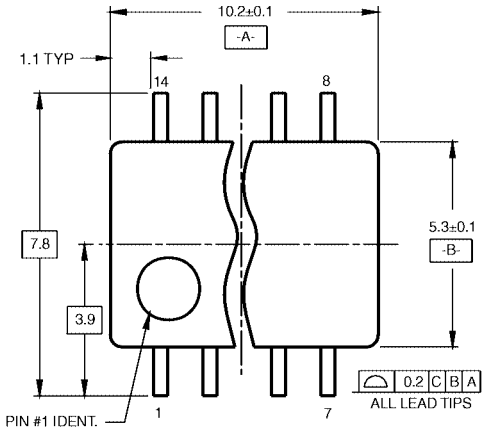

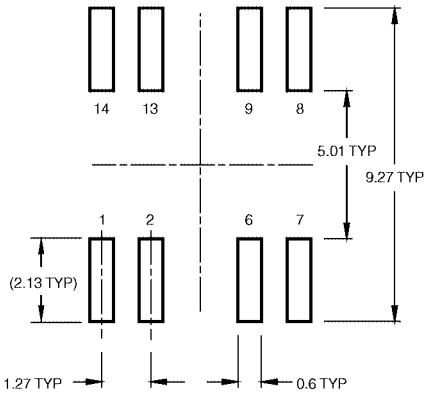

LAND PATTERN RECOMMENDATION

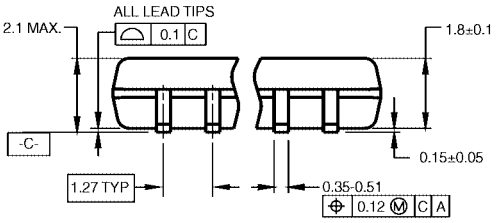

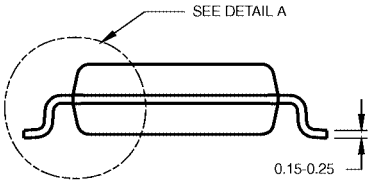

DIMENSIONS ARE IN MILLIMETERS

NOTES:

A. CONFORMS TO EIAJ EDR-7320 REGISTRATION, ESTABLISHED IN DECEMBER, 1998.

B. DIMENSIONS ARE IN MILLIMETERS.

C. DIMENSIONS ARE EXCLUSIVE OF BURRS, MOLD FLASH, AND TIE BAR EXTRUSIONS.

M14DRevB1

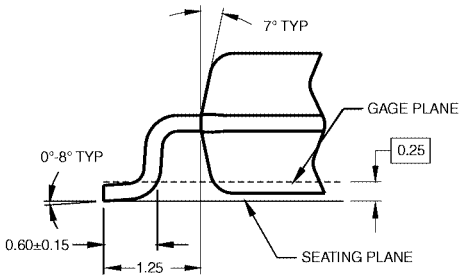

DETAIL A

14-Lead Small Outline Package (SOP), EIAJ TYPE II, 5.3mm Wide
Package Number M14D

Physical Dimensions inches (millimeters) unless otherwise noted (Continued)

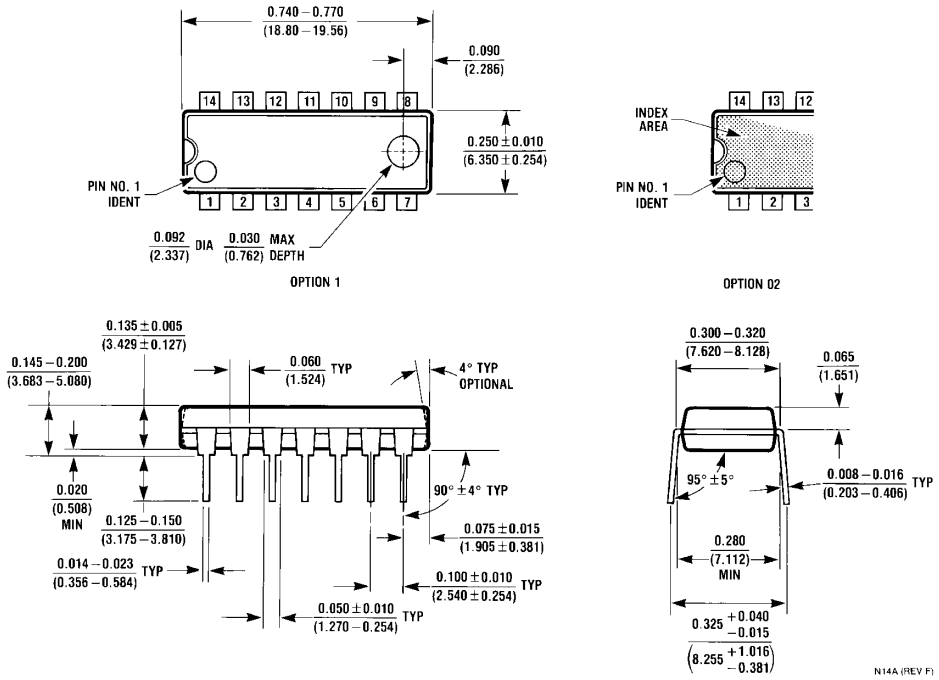

14-Lead Plastic Dual-In-Line Package (PDIP), JEDEC MS-001, 0.300" Wide
Package Number N14A

Fairchild does not assume any responsibility for use of any circuitry described, no circuit patent licenses are implied and Fairchild reserves the right at any time without notice to change said circuitry and specifications.

LIFE SUPPORT POLICY

FAIRCHILD'S PRODUCTS ARE NOT AUTHORIZED FOR USE AS CRITICAL COMPONENTS IN LIFE SUPPORT DEVICES OR SYSTEMS WITHOUT THE EXPRESS WRITTEN APPROVAL OF THE PRESIDENT OF FAIRCHILD SEMICONDUCTOR CORPORATION. As used herein:

1. Life support devices or systems are devices or systems which, (a) are intended for surgical implant into the body, or (b) support or sustain life, and (c) whose failure to perform when properly used in accordance with instructions for use provided in the labeling, can be reasonably expected to result in a significant injury to the user.
2. A critical component in any component of a life support device or system whose failure to perform can be reasonably expected to cause the failure of the life support device or system, or to affect its safety or effectiveness.

www.fairchildsemi.com

ENTEGRECİ

Bu belge www.entegreci.com üzerinden sunulmaktadır.

Elektronik komponent tedarikinde Entegreci

Entegreci, Eskişehir merkezli, Türkiye geneline satış yapan bir elektronik komponent mağazasıdır. Entegreler (IC), mikrodenetleyiciler, transistörler, diyotlar, pasif elemanlar, konnektörler, modüller ve geliştirme kartları tek adetten seri üretim adetlerine kadar satılır. Ürün sayfalarında güncel stok durumunu, fiyatı ve datasheet bağlantısını bulabilirsiniz.

Parça koduyla arama

Üretici parça numarasını yazın; stok ve fiyatı hemen görün.

www.entegreci.com

Ürün kategorileri

Entegreden kapasitöre tüm elektronik komponent kategorileri.

Kategorilere göz atın

Üreticiler

Aradığınız üreticinin ürünlerini tek sayfada inceleyin.

Üreticileri görün

Toplu alım ve teklif

Listede olmayan ya da yüksek adetli parçalar için teklif isteyin.

Teklif isteyin

www.entegreci.com | **destek@entegreci.com** | **0850 305 90 34**

Entegreci is an online electronic components store based in Türkiye. Search by manufacturer part number to see stock, prices and datasheets for integrated circuits, microcontrollers, transistors, passive components and connectors, or request a quote for parts that are not listed.

Bu sayfa Entegreci tarafından eklenmiştir. Belgenin önceki sayfaları asıl yayıncısına aittir ve içeriği değiştirilmemiştir; en güncel sürüm için belgenin yayıncısına başvurun.