

Is Now Part of



ON Semiconductor®

To learn more about ON Semiconductor, please visit our website at
www.onsemi.com

ON Semiconductor and the ON Semiconductor logo are trademarks of Semiconductor Components Industries, LLC dba ON Semiconductor or its subsidiaries in the United States and/or other countries. ON Semiconductor owns the rights to a number of patents, trademarks, copyrights, trade secrets, and other intellectual property. A listing of ON Semiconductor's product/patent coverage may be accessed at www.onsemi.com/site/pdf/Patent-Marking.pdf. ON Semiconductor reserves the right to make changes without further notice to any products herein. ON Semiconductor makes no warranty, representation or guarantee regarding the suitability of its products for any particular purpose, nor does ON Semiconductor assume any liability arising out of the application or use of any product or circuit, and specifically disclaims any and all liability, including without limitation special, consequential or incidental damages. Buyer is responsible for its products and applications using ON Semiconductor products, including compliance with all laws, regulations and safety requirements or standards, regardless of any support or applications information provided by ON Semiconductor. "Typical" parameters which may be provided in ON Semiconductor data sheets and/or specifications can and do vary in different applications and actual performance may vary over time. All operating parameters, including "Typicals" must be validated for each customer application by customer's technical experts. ON Semiconductor does not convey any license under its patent rights nor the rights of others. ON Semiconductor products are not designed, intended, or authorized for use as a critical component in life support systems or any FDA Class 3 medical devices or medical devices with a same or similar classification in a foreign jurisdiction or any devices intended for implantation in the human body. Should Buyer purchase or use ON Semiconductor products for any such unintended or unauthorized application, Buyer shall indemnify and hold ON Semiconductor and its officers, employees, subsidiaries, affiliates, and distributors harmless against all claims, costs, damages, and expenses, and reasonable attorney fees arising out of, directly or indirectly, any claim of personal injury or death associated with such unintended or unauthorized use, even if such claim alleges that ON Semiconductor was negligent regarding the design or manufacture of the part. ON Semiconductor is an Equal Opportunity/Affirmative Action Employer. This literature is subject to all applicable copyright laws and is not for resale in any manner.

ML4824

Power Factor Correction and PWM Controller Combo

Features

- Internally synchronized PFC and PWM in one IC
- Low total harmonic distortion
- Reduces ripple current in the storage capacitor between the PFC and PWM sections
- Average current, continuous boost leading edge PFC
- Fast transconductance error amp for voltage loop
- High efficiency trailing edge PWM can be configured for current mode or voltage mode operation
- Average line voltage compensation with brownout control
- PFC overvoltage comparator eliminates output "runaway" due to load removal
- Current fed gain modulator for improved noise immunity
- Overvoltage protection, UVLO, and soft start

General Description

The ML4824 is a controller for power factor corrected, switched mode power supplies. Power Factor Correction (PFC) allows the use of smaller, lower cost bulk capacitors, reduces power line loading and stress on the switching FETs, and results in a power supply that fully complies with IEC1000-2-3 specification. The ML4824 includes circuits for the implementation of a leading edge, average current, "boost" type power factor correction and a trailing edge, pulse width modulator (PWM).

The device is available in two versions; the ML4824-1 ($f_{PWM} = f_{PFC}$) and the ML4824-2 ($f_{PWM} = 2 \times f_{PFC}$). Doubling the switching frequency of the PWM allows the user to design with smaller output components while maintaining the best operating frequency for the PFC. An over-voltage comparator shuts down the PFC section in the event of a sudden decrease in load. The PFC section also includes peak current limiting and input voltage brown-out protection. The PWM section can be operated in current or voltage mode at up to 250kHz and includes a duty cycle limit to prevent transformer saturation.

Block Diagram

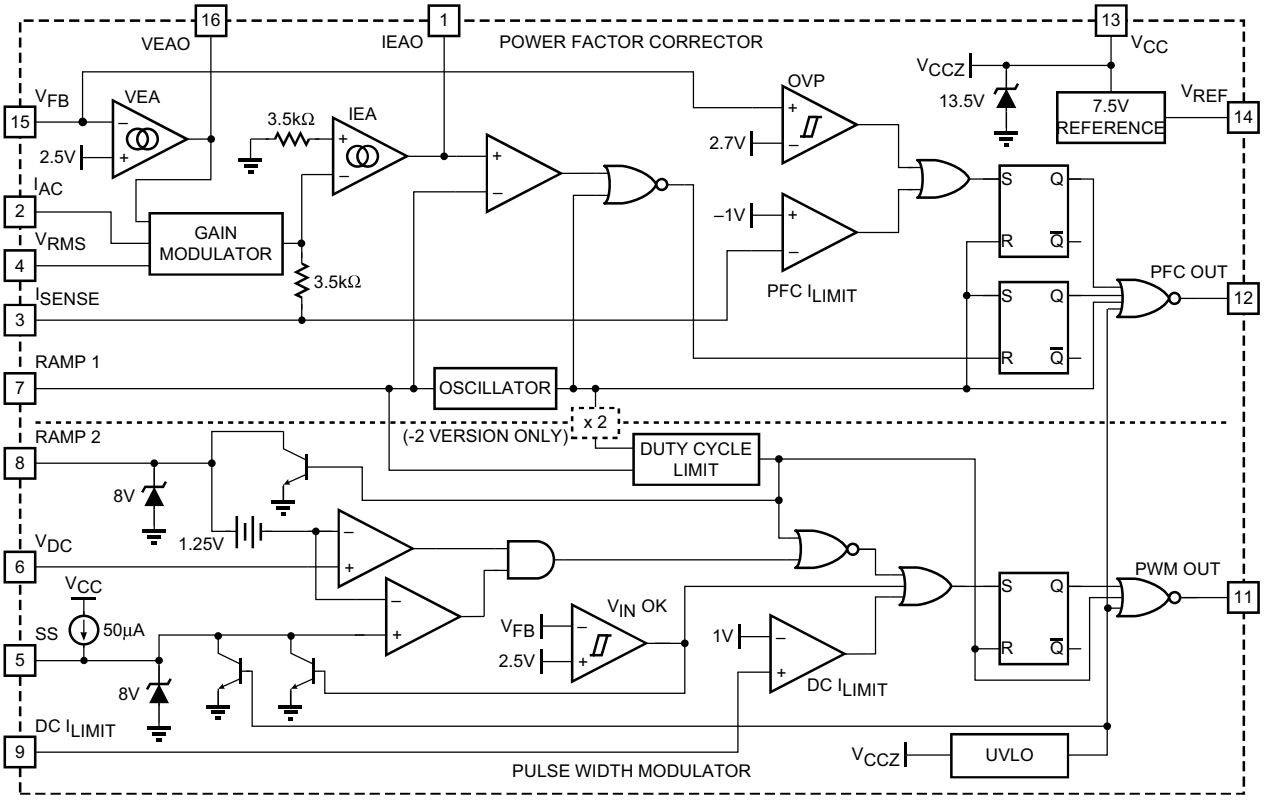

Pin Configuration

ML4824
16-Pin PDIP (P16)
16-Pin Wide SOIC (S16W)

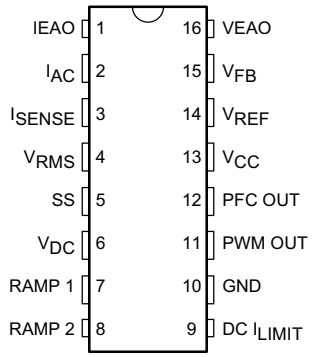

TOP VIEW

Pin Description

PIN	NAME	FUNCTION
1	IEAO	PFC transconductance current error amplifier output
2	I_{AC}	PFC gain control reference input
3	I_{SENSE}	Current sense input to the PFC current limit comparator
4	V_{RMS}	Input for PFC RMS line voltage compensation
5	SS	Connection point for the PWM soft start capacitor
6	V_{DC}	PWM voltage feedback input
7	RAMP 1	Oscillator timing node; timing set by R_TC_T
8	RAMP 2	When in current mode, this pin functions as as the current sense input; when in voltage mode, it is the PWM input from PFC output (feed forward ramp).
9	DC I_{LIMIT}	PWM current limit comparator input
10	GND	Ground
11	PWM OUT	PWM driver output
12	PFC OUT	PFC driver output
13	V_{CC}	Positive supply (connected to an internal shunt regulator)
14	V_{REF}	Buffered output for the internal 7.5V reference
15	V_{FB}	PFC transconductance voltage error amplifier input
16	VEAO	PFC transconductance voltage error amplifier output

Absolute Maximum Ratings

Absolute maximum ratings are those values beyond which the device could be permanently damaged. Absolute maximum ratings are stress ratings only and functional device operation is not implied.

Parameter	Min.	Max.	Units
V_{CC} Shunt Regulator Current		55	mA
I_{SENSE} Voltage	–3	5	V
Voltage on Any Other Pin	GND – 0.3	V_{CCZ} + 0.3	V
I_{REF}		20	mA
I_{AC} Input Current		10	mA
Peak PFC OUT Current, Source or Sink		500	mA
Peak PWM OUT Current, Source or Sink		500	mA
PFC OUT, PWM OUT Energy Per Cycle		1.5	µJ
Junction Temperature		150	°C
Storage Temperature Range	–65	150	°C
Lead Temperature (Soldering, 10 sec)		260	°C
Thermal Resistance (θ_{JA}) Plastic DIP Plastic SOIC		 80 105	 °C/W °C/W

Operating Conditions

Temperature Range

Parameter	Min.	Max.	Units
ML4824CX	0	70	°C
ML4824IX	–40	85	°C

Electrical Characteristics

Unless otherwise specified, I_{CC} = 25mA, R_T = 52.3kΩ, C_T = 470pF, T_A = Operating Temperature Range (Note 1)

Symbol	Parameter	Conditions	Min.	Typ.	Max.	Units
Voltage Error Amplifier						
	Input Voltage Range		0		7	V
	Transconductance	$V_{NON\ INV} = V_{INV}$, VEAO = 3.75V	50	85	120	µ℧
	Feedback Reference Voltage		2.46	2.53	2.60	V
	Input Bias Current	Note 2		-0.3	–1.0	µA
	Output High Voltage		6.0	6.7		V
	Output Low Voltage			0.6	1.0	V
	Source Current	ΔV_{IN} = ±0.5V, V_{OUT} = 6V	–40	–80		µA
	Sink Current	ΔV_{IN} = ±0.5V, V_{OUT} = 1.5V	40	80		µA
	Open Loop Gain		60	75		dB
	Power Supply Rejection Ratio	V_{CCZ} - 3V < V_{CC} < V_{CCZ} - 0.5V	60	75		dB
Current Error Amplifier						
	Input Voltage Range		–1.5		2	V
	Transconductance	$V_{NON\ INV} = V_{INV}$, VEAO = 3.75V	130	195	310	µ℧
	Input Offset Voltage		0	8	15	mV

Electrical Characteristics (continued)

Unless otherwise specified, I_{CC} = 25mA, R_T = 52.3kΩ, C_T = 470pF, T_A = Operating Temperature Range (Note 1)

Symbol	Parameter	Conditions	Min.	Typ.	Max.	Units
	Input Bias Current			–0.5	–1.0	µA
	Output High Voltage		6.0	6.7		V
	Output Low Voltage			0.6	1.0	V
	Source Current	ΔV_{IN} = ±0.5V, V_{OUT} = 6V	–40	–90		µA
	Sink Current	ΔV_{IN} = ±0.5V, V_{OUT} = 1.5V	40	90		µA
	Open Loop Gain		60	75		dB
	Power Supply Rejection Ratio	V_{CCZ} - 3V < V_{CC} < V_{CCZ} - 0.5V	60	75		dB
OVP Comparator						
	Threshold Voltage		2.6	2.7	2.8	V
	Hysteresis		80	115	150	mV
PFC I_{LIMIT} Comparator						
	Threshold Voltage		–0.8	–1.0	–1.15	V
	Δ(PFC I_{LIMIT} V_{TH} - Gain Modulator Output)		100	190		mV
	Delay to Output			150	300	ns
DC I_{LIMIT} Comparator						
	Threshold Voltage		0.97	1.02	1.07	V
	Input Bias Current			±0.3	±1	µA
	Delay to Output			150	300	ns
V_{IN} OK Comparator						
	Threshold Voltage		2.4	2.5	2.6	V
	Hysteresis		0.8	1.0	1.2	V
Gain Modulator						
	Gain (Note 3)	I_{AC} = 100µA, V_{RMS} = V_{FB} = 0V	0.36	0.55	0.66	
		I_{AC} = 50µA, V_{RMS} = 1.2V, V_{FB} = 0V	1.20	1.80	2.24	
		I_{AC} = 50µA, V_{RMS} = 1.8V, V_{FB} = 0V	0.55	0.80	1.01	
		I_{AC} = 100µA, V_{RMS} = 3.3V, V_{FB} = 0V	0.14	0.20	0.26	
	Bandwidth	IAC = 100µA		10		MHz
	Output Voltage	I_{AC} = 250µA, V_{RMS} = 1.15V, V_{FB} = 0V	0.74	0.82	0.90	V
Oscillator						
	Initial Accuracy	T_A = 25°C	71	76	81	kHz
	Voltage Stability	V_{CCZ} - 3V < V_{CC} < V_{CCZ} - 0.5V		1		%
	Temperature Stability			2		%
	Total Variation	Line, Temp	68		84	kHz
	Ramp Valley to Peak Voltage			2.5		V
	Dead Time	PFC Only	270	370	470	ns
	C_T Discharge Current	$V_{RAMP\ 2}$ = 0V, $V_{RAMP\ 1}$ = 2.5V	4.5	7.5	9.5	mA
Reference						
	Output Voltage	T_A = 25˚C, I(V_{REF}) = 1mA	7.4	7.5	7.6	V

Electrical Characteristics (continued)

Unless otherwise specified, I_{CC} = 25mA, R_T = 52.3kΩ, C_T = 470pF, T_A = Operating Temperature Range (Note 1)

Symbol	Parameter	Conditions	Min.	Typ.	Max.	Units
	Line Regulation	V_{CCZ} - 3V < V_{CC} < V_{CCZ} - 0.5V		2	10	mV
	Load Regulation	1mA < I(V_{REF}) < 20mA		2	15	mV
	Temperature Stability			0.4		%
	Total Variation	Line, Load, Temp	7.35		7.65	V
	Long Term Stability	T_J = 125°C, 1000 Hours		5	25	mV
PFC						
	Minimum Duty Cycle	V_{IEAO} > 4.0V			0	%
	Maximum Duty Cycle	V_{IEAO} < 1.2V	90	95		%
	Output Low Voltage	I_{OUT} = -20mA		0.4	0.8	V
		I_{OUT} = -100mA		0.8	2.0	V
		I_{OUT} = 10mA, V_{CC} = 8V		0.7	1.5	V
	Output High Voltage	I_{OUT} = 20mA	10	10.5		V
		I_{OUT} = 100mA	9.5	10		V
	Rise/Fall Time	C_L = 1000pF		50		ns
PWM						
	Duty Cycle Range	ML4824-1	0-44	0-47	0-50	%
		ML4824-2	0-37	0-40	0-45	%
	Output Low Voltage	I_{OUT} = -20mA		0.4	0.8	V
		I_{OUT} = -100mA		0.8	2.0	V
		I_{OUT} = 10mA, V_{CC} = 8V		0.7	1.5	V
	Output High Voltage	I_{OUT} = 20mA	10	10.5		V
		I_{OUT} = 100mA	9.5	10		V
	Rise/Fall Time	C_L = 1000pF		50		ns
Supply						
	Shunt Regulator Voltage (V_{CCZ})		12.8	13.5	14.4	V
	V_{CCZ} Load Regulation	25mA < I_{CC} < 55mA		±100	±300	mV
	V_{CCZ} Total Variation	Load, Temp	12.4		14.6	V
	Start-up Current	V_{CC} = 11.8V, C_L = 0		0.7	1.0	mA
	Operating Current	V_{CC} < V_{CCZ} - 0.5V, C_L = 0		16	19	mA
	Undervoltage Lockout Threshold		12	13	14	V
	Undervoltage Lockout Hysteresis		2.7	3.0	3.3	V

Notes

1. Limits are guaranteed by 100% testing, sampling, or correlation with worst-case test conditions.
2. Includes all bias currents to other circuits connected to the V_{FB} pin.
3. Gain = K x 5.3V; K = ($I_{GAINMOD}$ - I_{OFFSET}) x I_{AC} x (VEAO - 1.5V)$^{-1}$.

Typical Performance Characteristics

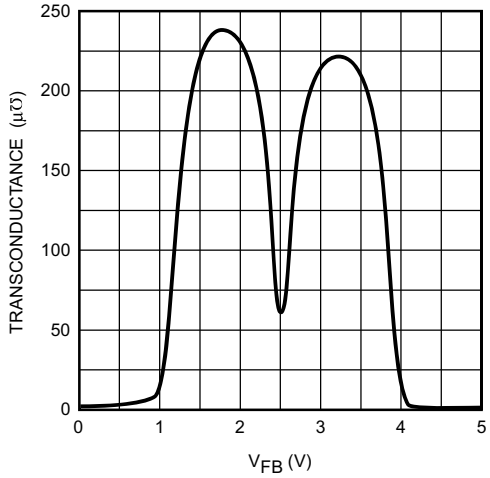

Voltage Error Amplifier (VEA) Transconductance (g_m)

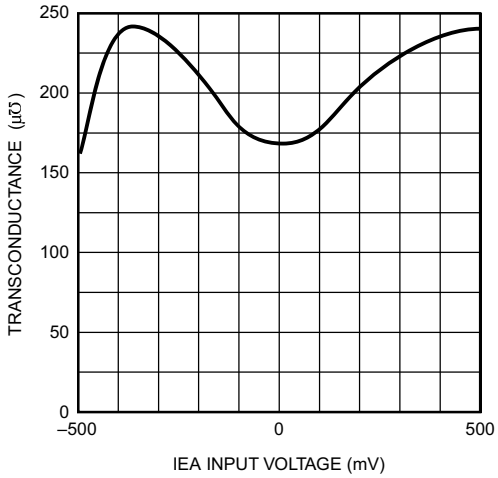

Current Error Amplifier (IEA) Transconductance (g_m)

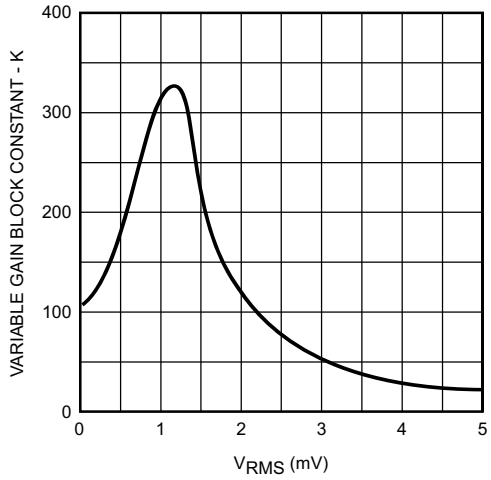

Gain Modulator Transfer Characteristic (K)

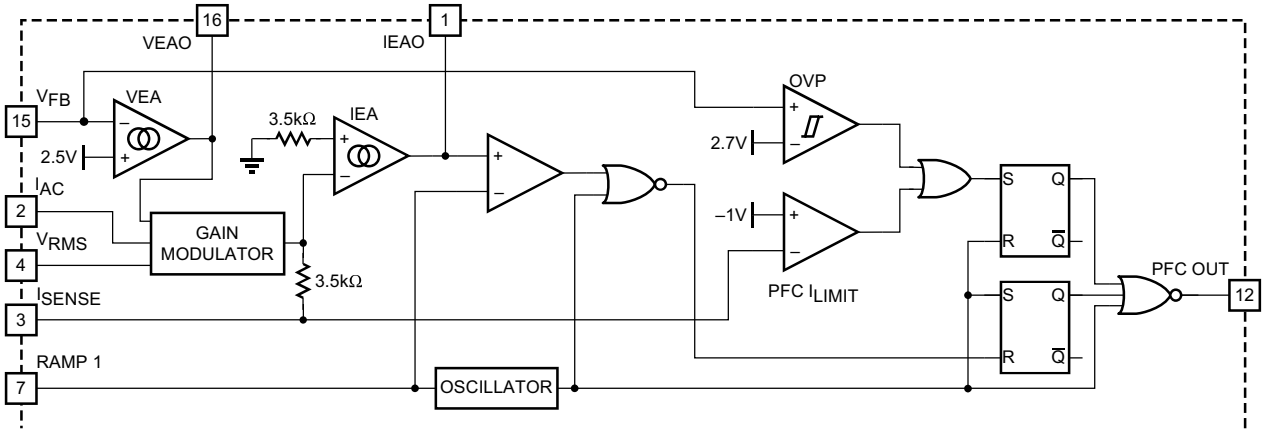

Figure 1. PFC Section Block Diagram.

Functional Description

The ML4824 consists of an average current controlled, continuous boost Power Factor Corrector (PFC) front end and a synchronized Pulse Width Modulator (PWM) back end. The PWM can be used in either current or voltage mode. In voltage mode, feedforward from the PFC output buss can be used to improve the PWM's line regulation. In either mode, the PWM stage uses conventional trailing-edge duty cycle modulation, while the PFC uses leading-edge modulation. This patented leading/trailing edge modulation technique results in a higher useable PFC error amplifier bandwidth, and can significantly reduce the size of the PFC DC buss capacitor.

The synchronization of the PWM with the PFC simplifies the PWM compensation due to the controlled ripple on the PFC output capacitor (the PWM input capacitor). The PWM section of the ML4824-1 runs at the same frequency as the PFC. The PWM section of the ML4824-2 runs at twice the frequency of the PFC, which allows the use of smaller PWM output magnetics and filter capacitors while holding down the losses in the PFC stage power components.

In addition to power factor correction, a number of protection features have been built into the ML4824. These include soft-start, PFC over-voltage protection, peak current limiting, brown-out protection, duty cycle limit, and under-voltage lockout.

Power Factor Correction

Power factor correction makes a non-linear load look like a resistive load to the AC line. For a resistor, the current drawn from the line is in phase with and proportional to the line voltage, so the power factor is unity (one). A common class of non-linear load is the input of most power supplies, which use a bridge rectifier and capacitive input filter fed from the line. The peak-charging effect which occurs on the input filter capacitor in these supplies causes brief high-amplitude pulses of current to flow from the power line, rather than a sinusoidal current in phase with the line voltage. Such supplies present a power factor to the line of less than one (i.e. they cause significant current harmonics of the power line frequency to appear at their input). If the input current drawn by such a supply (or any other non-linear load) can be made to follow the input voltage in instantaneous amplitude, it will appear resistive to the AC line and a unity power factor will be achieved.

To hold the input current draw of a device drawing power from the AC line in phase with and proportional to the input voltage, a way must be found to prevent that device from loading the line except in proportion to the instantaneous line voltage. The PFC section of the ML4824 uses a boost-mode DC-DC converter to accomplish this. The input to the converter is the full wave rectified AC line voltage. No bulk filtering is applied following the bridge rectifier, so the input voltage to the boost converter ranges (at twice line frequency) from zero volts to the peak value of the AC input and back to zero. By forcing the boost converter to meet two simultaneous conditions, it is possible to ensure that the current which the converter draws from the power line agrees with the instantaneous line voltage. One of these conditions is that the output voltage of the boost converter must be set higher than the peak value of the line voltage. A commonly used value is 385VDC, to allow for a high line of $270VAC_{rms}$. The other condition is that the current which the converter is allowed to draw from the line at any given instant must be proportional to the line voltage. The first of these requirements is satisfied by establishing a suitable voltage control loop for the converter, which in turn drives a current error amplifier and switching output driver. The second requirement is met by using the rectified AC line voltage to modulate the output of the voltage control loop. Such modulation causes the current error amplifier to command a power stage current which varies directly with the input voltage. In order to prevent ripple which will necessarily appear at the output of the boost circuit (typically about 10VAC on a 385V DC level) from introducing distortion back through the voltage error amplifier, the bandwidth of the voltage loop is deliberately kept low. A final refinement is to adjust the overall gain of the PFC such to be proportional to $1/V_{IN}^2$, which linearizes the transfer function of the system as the AC input voltage varies.

Since the boost converter topology in the ML4824 PFC is of the current-averaging type, no slope compensation is required.

PFC Section

Gain Modulator

Figure 1 shows a block diagram of the PFC section of the ML4824. The gain modulator is the heart of the PFC, as it is this circuit block which controls the response of the current loop to line voltage waveform and frequency, rms line voltage, and PFC output voltage. There are three inputs to the gain modulator. These are:

1. A current representing the instantaneous input voltage (amplitude and waveshape) to the PFC. The rectified AC input sine wave is converted to a proportional current via a resistor and is then fed into the gain modulator at I_{AC}. Sampling current in this way minimizes ground noise, as is required in high power switching power conversion environments. The gain modulator responds linearly to this current.

2. A voltage proportional to the long-term rms AC line voltage, derived from the rectified line voltage after scaling and filtering. This signal is presented to the gain modulator at V_{RMS}. The gain modulator's output is inversely proportional to V_{RMS}^2 (except at unusually low values of V_{RMS} where special gain contouring takes over, to limit power dissipation of the circuit components under heavy brownout conditions). The relationship between V_{RMS} and gain is called K, and is illustrated in the Typical Performance Characteristics.

3. The output of the voltage error amplifier, VEAO. The gain modulator responds linearly to variations in this voltage.

The output of the gain modulator is a current signal, in the form of a full wave rectified sinusoid at twice the line frequency. This current is applied to the virtual-ground (negative) input of the current error amplifier. In this way the gain modulator forms the reference for the current error loop, and ultimately controls the instantaneous current draw of the PFC from the power line. The general form for the output of the gain modulator is:

$$I_{GAINMOD} \cong \frac{I_{AC} \times VEAO}{V_{RMS}^{2}} \times 1V \quad (1)$$

More exactly, the output current of the gain modulator is given by:

$$I_{GAINMOD} \cong K \times (VEAO - 1.5V) \times I_{AC}$$

where K is in units of V^{-1}.

Note that the output current of the gain modulator is limited to ≅ 200µA.

Current Error Amplifier

The current error amplifier's output controls the PFC duty cycle to keep the average current through the boost inductor a linear function of the line voltage. At the inverting input to the current error amplifier, the output current of the gain modulator is summed with a current which results from a negative voltage being impressed upon the I_{SENSE} pin (current into $I_{SENSE} \cong V_{SENSE}/3.5k\Omega$). The negative voltage on I_{SENSE} represents the sum of all currents flowing in the PFC circuit, and is typically derived from a current sense resistor in series with the negative terminal of the input bridge rectifier. In higher power applications, two current transformers are sometimes used, one to monitor the I_D of the boost MOSFET(s) and one to monitor the I_F of the boost diode. As stated above, the inverting input of the current error amplifier is a virtual ground. Given this fact, and the arrangement of the duty cycle modulator polarities internal to the PFC, an increase in positive current from the gain modulator will cause the output stage to increase its duty cycle until the voltage on I_{SENSE} is adequately negative to cancel this increased current. Similarly, if the gain modulator's output decreases, the output duty cycle will decrease, to achieve a less negative voltage on the I_{SENSE} pin.

Cycle-By-Cycle Current Limiter

The I_{SENSE} pin, as well as being a part of the current feedback loop, is a direct input to the cycle-by-cycle current limiter for the PFC section. Should the input voltage at this pin ever be more negative than -1V, the output of the PFC will be disabled until the protection flip-flop is reset by the clock pulse at the start of the next PFC power cycle.

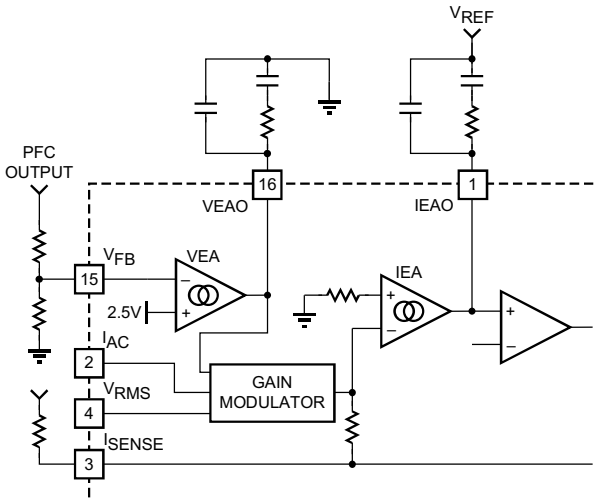

Figure 2. Compensation Network Connections for the Voltage and Current Error Amplifiers

Overvoltage Protection

The OVP comparator serves to protect the power circuit from being subjected to excessive voltages if the load should suddenly change. A resistor divider from the high voltage DC output of the PFC is fed to V_{FB}. When the voltage on V_{FB} exceeds 2.7V, the PFC output driver is shut down. The PWM section will continue to operate. The OVP comparator has 125mV of hysteresis, and the PFC will not restart until the voltage at V_{FB} drops below 2.58V. The V_{FB} should be set at a level where the active and passive external power components and the ML4824 are within their safe operating voltages, but not so low as to interfere with the boost voltage regulation loop.

Error Amplifier Compensation

The PWM loading of the PFC can be modeled as a negative resistor; an increase in input voltage to the PWM causes a decrease in the input current. This response dictates the proper compensation of the two transconductance error amplifiers. Figure 2 shows the types of compensation networks most commonly used for the voltage and current error amplifiers, along with their respective return points. The current loop compensation is returned to V_{REF} to produce a soft-start characteristic on the PFC: as the reference voltage comes up from zero volts, it creates a differentiated voltage on IEAO which prevents the PFC from immediately demanding a full duty cycle on its boost converter.

There are two major concerns when compensating the voltage loop error amplifier; stability and transient response. Optimizing interaction between transient response and stability requires that the error amplifier's open-loop crossover frequency should be 1/2 that of the line frequency, or 23Hz for a 47Hz line (lowest anticipated international power frequency). The gain vs. input voltage of the

ML4824's voltage error amplifier has a specially shaped nonlinearity such that under steady-state operating conditions the transconductance of the error amplifier is at a local minimum. Rapid perturbations in line or load conditions will cause the input to the voltage error amplifier (V_{FB}) to deviate from its 2.5V (nominal) value. If this happens, the transconductance of the voltage error amplifier will increase significantly, as shown in the Typical Performance Characteristics. This raises the gain-bandwidth product of the voltage loop, resulting in a much more rapid voltage loop response to such perturbations than would occur with a conventional linear gain characteristic.

The current amplifier compensation is similar to that of the voltage error amplifier with the exception of the choice of crossover frequency. The crossover frequency of the current amplifier should be at least 10 times that of the voltage amplifier, to prevent interaction with the voltage loop. It should also be limited to less than 1/6th that of the switching frequency, e.g. 16.7kHz for a 100kHz switching frequency.

There is a modest degree of gain contouring applied to the transfer characteristic of the current error amplifier, to increase its speed of response to current-loop perturbations. However, the boost inductor will usually be the dominant factor in overall current loop response. Therefore, this contouring is significantly less marked than that of the voltage error amplifier. This is illustrated in the Typical Performance Characteristics.

For more information on compensating the current and voltage control loops, see Application Notes 33 and 34. Application Note 16 also contains valuable information for the design of this class of PFC.

Oscillator (RAMP 1)

The oscillator frequency is determined by the values of R_T and C_T, which determine the ramp and off-time of the oscillator output clock:

$$f_{OSC} = \frac{1}{t_{RAMP} + t_{DEADTIME}} \quad (2)$$

The deadtime of the oscillator is derived from the following equation:

$$t_{RAMP} = C_T \times R_T \times \ln\left(\frac{V_{REF} - 1.25}{V_{REF} - 3.75}\right) \quad (3)$$

at V_{REF} = 7.5V:

$$t_{RAMP} = C_T \times R_T \times 0.51$$

The deadtime of the oscillator may be determined using:

$$t_{DEADTIME} = \frac{2.5V}{5.1mA} \times C_T = 490 \times C_T \quad (4)$$

The deadtime is so small ($t_{RAMP} >> t_{DEADTIME}$) that the operating frequency can typically be approximated by:

$$f_{OSC} = \frac{1}{t_{RAMP}} \quad (5)$$

EXAMPLE:
For the application circuit shown in the data sheet, with the oscillator running at:

$$f_{OSC} = 100kHz = \frac{1}{t_{RAMP}}$$

$$t_{RAMP} = C_T \times R_T \times 0.51 = 1 \times 10^{-5}$$

Solving for R_T x C_T yields 2 x 10^{-4}. Selecting standard components values, C_T = 470pF, and R_T = 41.2kΩ.

The deadtime of the oscillator adds to the Maximum PWM Duty Cycle (it is an input to the Duty Cycle Limiter). With zero oscillator deadtime, the Maximum PWM Duty Cycle is typically 45%. In many applications, care should be taken that C_T not be made so large as to extend the Maximum Duty Cycle beyond 50%. This can be accomplished by using a stable 470pF capacitor for C_T.

PWM SECTION

Pulse Width Modulator

The PWM section of the ML4824 is straightforward, but there are several points which should be noted. Foremost among these is its inherent synchronization to the PFC section of the device, from which it also derives its basic timing (at the PFC frequency in the ML4824-1, and at twice the PFC frequency in the ML4824-2). The PWM is capable of current-mode or voltage mode operation. In current-mode applications, the PWM ramp (RAMP 2) is usually derived directly from a current sensing resistor or current transformer in the primary of the output stage, and is thereby representative of the current flowing in the converter's output stage. DC I_{LIMIT}, which provides cycle-by-cycle current limiting, is typically connected to RAMP 2 in such applications. For voltage-mode operation or certain specialized applications, RAMP 2 can be connected to a separate RC timing network to generate a voltage ramp against which V_{DC} will be compared. Under these conditions, the use of voltage feedforward from the PFC buss can assist in line regulation accuracy and response. As in current mode operation, the DC I_{LIMIT} input is used for output stage overcurrent protection.

No voltage error amplifier is included in the PWM stage of the ML4824, as this function is generally performed on the output side of the PWM's isolation boundary. To facilitate the design of optocoupler feedback circuitry, an offset has been built into the PWM's RAMP 2 input which allows V_{DC} to command a zero percent duty cycle for input voltages below 1.25V.

PWM Current Limit

The DC I_{LIMIT} pin is a direct input to the cycle-by-cycle current limiter for the PWM section. Should the input voltage at this pin ever exceed 1V, the output of the PWM will be disabled until the output flip-flop is reset by the clock pulse at the start of the next PWM power cycle.

V_{IN} OK Comparator

The V_{IN} OK comparator monitors the DC output of the PFC and inhibits the PWM if this voltage on V_{FB} is less than its nominal 2.5V. Once this voltage reaches 2.5V, which corresponds to the PFC output capacitor being charged to its rated boost voltage, the soft-start begins.

PWM Control (RAMP 2)

When the PWM section is used in current mode, RAMP 2 is generally used as the sampling point for a voltage representing the current in the primary of the PWM's output transformer, derived either by a current sensing resistor or a current transformer. In voltage mode, it is the input for a ramp voltage generated by a second set of timing components (R_{RAMP2}, C_{RAMP2}), which will have a minimum value of zero volts and should have a peak value of approximately 5V. In voltage mode operation, feedforward from the PFC output buss is an excellent way to derive the timing ramp for the PWM stage.

Soft Start

Start-up of the PWM is controlled by the selection of the external capacitor at SS. A current source of 50µA supplies the charging current for the capacitor, and start-up of the PWM begins at 1.25V. Start-up delay can be programmed by the following equation::

$$C_{SS} = t_{DELAY} \times \frac{50\mu A}{1.25V} \quad (6)$$

where C_{SS} is the required soft start capacitance, and t_{DELAY} is the desired start-up delay.

It is important that the time constant of the PWM soft-start allow the PFC time to generate sufficient output power for the PWM section. The PWM start-up delay should be at least 5ms.

Solving for the minimum value of C_{SS}:

$$C_{SS} = 5ms \times \frac{50\mu A}{1.25V} = 200nF$$

Caution should be exercised when using this minimum soft start capacitance value because premature charging of the SS capacitor and activation of the PWM section can result if V_{FB} is in the hysteresis band of the V_{IN} OK comparator at start-up. The magnitude of V_{FB} at start-up is related both to line voltage and nominal PFC output voltage. Typically, a 1.0µF soft start capacitor will allow time for V_{FB} and PFC out to reach their nominal values prior to activation of the PWM section at line voltages between 90Vrms and 265Vrms.

GENERATING V_{CC}

The ML4824 is a current-fed part. It has an internal shunt voltage regulator, which is designed to regulate the voltage internal to the part at 13.5V. This allows a low power dissipation while at the same time delivering 10V of gate drive at the PWM OUT and PFC OUT outputs. It is important to limit the current through the part to avoid overheating or destroying it. This can be easily done with a single resistor in series with the Vcc pin, returned to a bias supply of typically 18V to 20V. The resistor's value must be chosen to meet the operating current requirement of the ML4824 itself (19mA max) plus the current required by the two gate driver outputs.

EXAMPLE:
With a V_{BIAS} of 20V, a V_{CC} limit of 14.6V (max) and the ML4824 driving a total gate charge of 110nC at 100kHz (e.g., 1 IRF840 MOSFET and 2 IRF830 MOSFETs), the gate driver current required is:

$$I_{GATEDRIVE} = 100kHz \times 100nC = 11mA \quad (7)$$

$$R_{BIAS} = \frac{20V - 14.6V}{19mA + 11mA} = 180\Omega \quad (8)$$

To check the maximum dissipation in the ML4824, find the current at the minimum V_{CC} (12.4V)::

$$I_{CC} = \frac{20V - 12.4V}{180\Omega} = 42.2mA \quad (9)$$

The maximum allowable I_{CC} is 55mA, so this is an acceptable design.

The ML4824 should be locally bypassed with a 10nF and a 1µF ceramic capacitor. In most applications, an electrolytic capacitor of between 100µF and 330µF is also required across the part, both for filtering and as part of the start-up bootstrap circuitry.

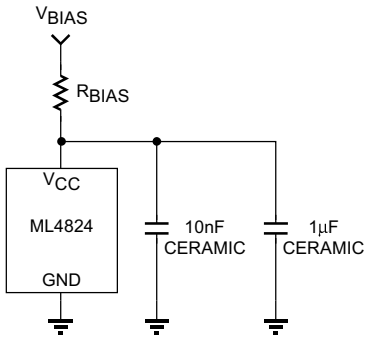

Figure 3. External Component Connections to V_{CC}

Leading/Trailing Modulation

Conventional Pulse Width Modulation (PWM) techniques employ trailing edge modulation in which the switch will turn on right after the trailing edge of the system clock. The error amplifier output voltage is then compared with the modulating ramp. When the modulating ramp reaches the level of the error amplifier output voltage, the switch will be turned OFF. When the switch is ON, the inductor current will ramp up. The effective duty cycle of the trailing edge modulation is determined during the ON time of the switch. Figure 4 shows a typical trailing edge control scheme.

In the case of leading edge modulation, the switch is turned OFF right at the leading edge of the system clock. When the modulating ramp reaches the level of the error amplifier output voltage, the switch will be turned ON. The effective duty-cycle of the leading edge modulation is determined during the OFF time of the switch. Figure 5 shows a leading edge control scheme.

One of the advantages of this control teccnique is that it requires only one system clock. Switch 1 (SW1) turns off and switch 2 (SW2) turns on at the same instant to minimize the momentary “no-load” period, thus lowering ripple voltage generated by the switching action. With such synchronized switching, the ripple voltage of the first stage is reduced. Calculation and evaluation have shown that the 120Hz component of the PFC’s output ripple voltage can be reduced by as much as 30% using this method.

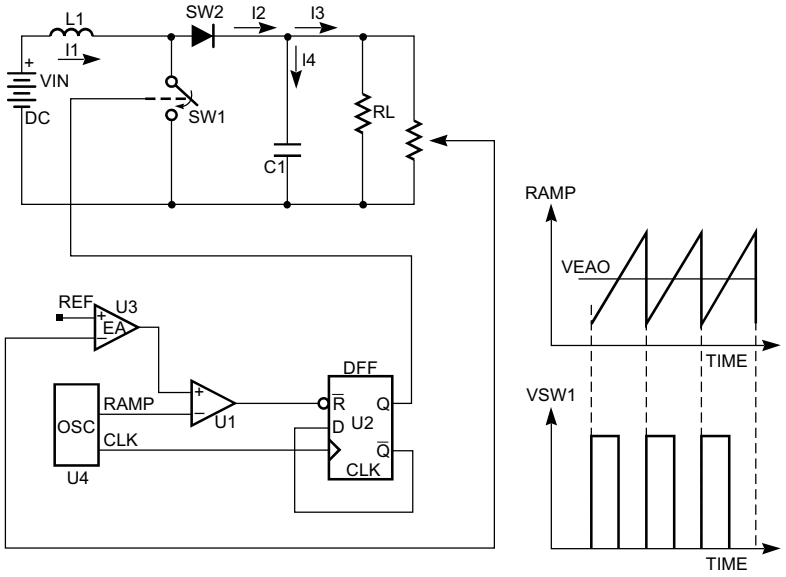

Figure 4. Typical Trailing Edge Control Scheme.

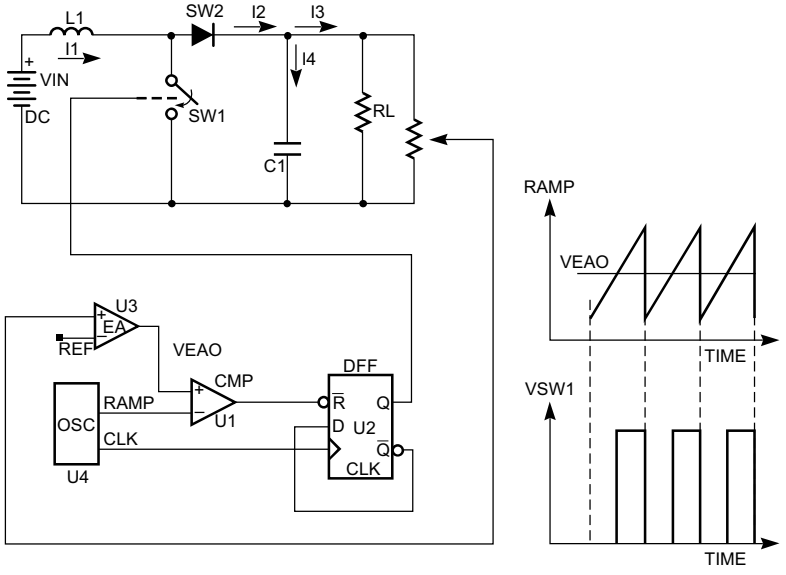

Figure 5. Typical Leading Edge Control Scheme.

TYPICAL APPLICATIONS

Figure 6 is the application circuit for a complete 100W power factor corrected power supply, designed using the methods and general topology detailed in Application Note 33.

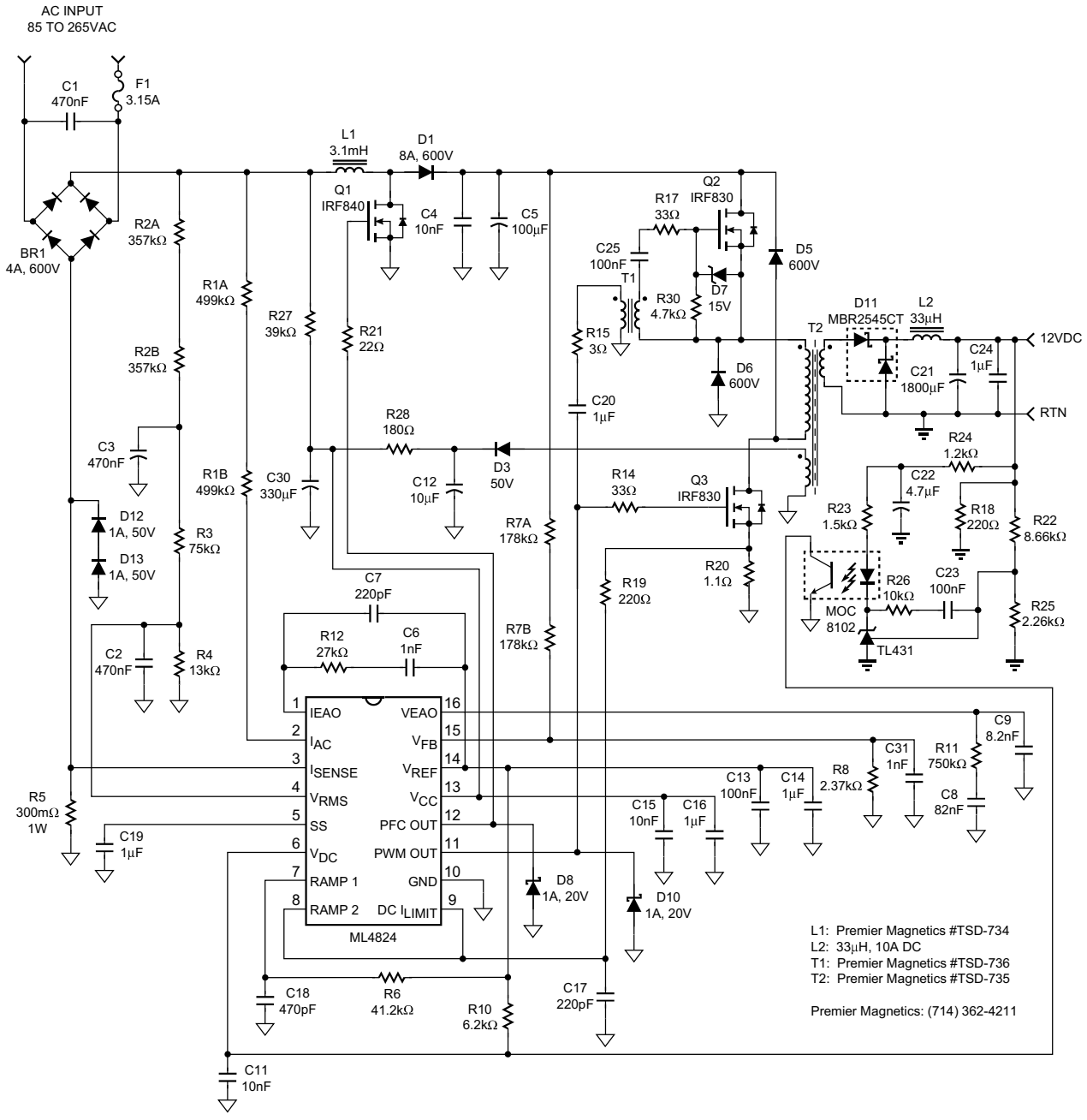

Figure 6. 100W Power Factor Corrected Power Supply, Designed Using Micro Linear Application Note 33.

Mechanical Dimensions inches (millimeters)

Package: P16
16-Pin PDIP

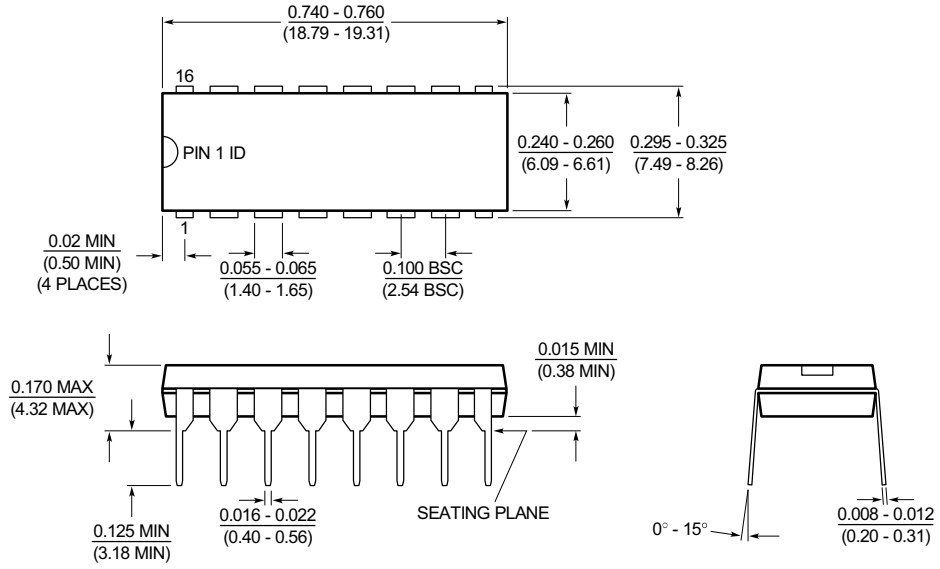

Mechanical Dimensions inches (millimeters)

Package: S16W
16-Pin Wide SOIC

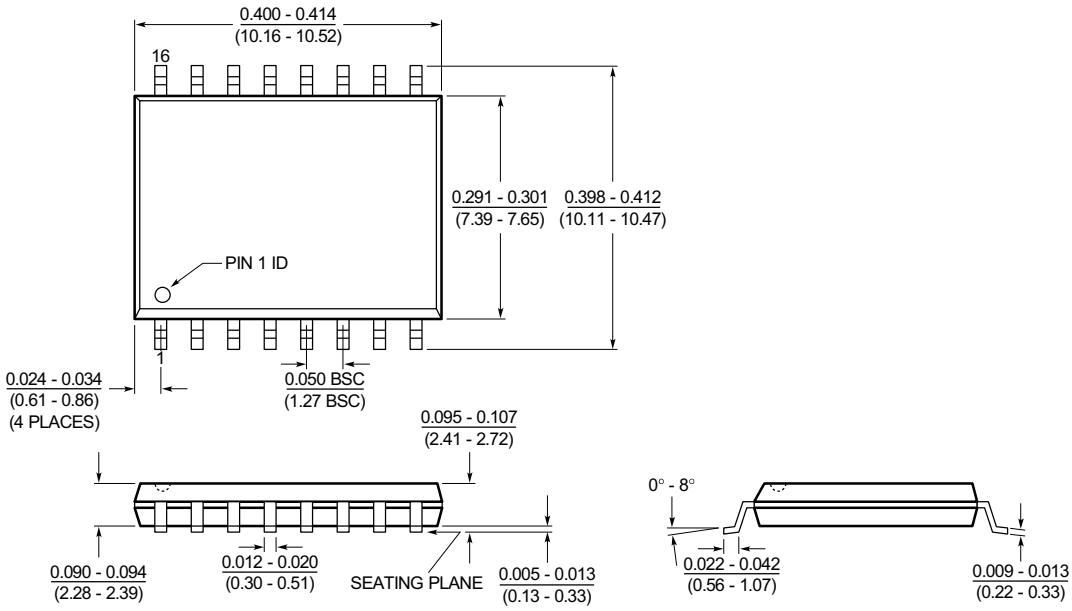

Ordering Information

Part Number	PWM Frequency	Temperature Range	Package
ML4824CP1	1 x PFC	0°C to 70°C	16-Pin PDIP (P16)
ML4824CP2	2 x PFC	0°C to 70°C	16-Pin PDIP (P16)
ML4824CS1	1 x PFC	0°C to 70°C	16-Pin Wide SOIC (S16W)
ML4824CS2	2 x PFC	0°C to 70°C	16-Pin Wide SOIC (S16W)
ML4824IP1	1 x PFC	–40°C to 85°C	16-Pin PDIP (P16)
ML4824IS1	1 x PFC	–40°C to 85°C	16-Pin Wide SOIC (S16W)
ML4824IS2	2 x PFC	–40°C to 85°C	16-Pin Wide SOIC (S16W)

DISCLAIMER

FAIRCHILD SEMICONDUCTOR RESERVES THE RIGHT TO MAKE CHANGES WITHOUT FURTHER NOTICE TO ANY PRODUCTS HEREIN TO IMPROVE RELIABILITY, FUNCTION OR DESIGN. FAIRCHILD DOES NOT ASSUME ANY LIABILITY ARISING OUT OF THE APPLICATION OR USE OF ANY PRODUCT OR CIRCUIT DESCRIBED HEREIN; NEITHER DOES IT CONVEY ANY LICENSE UNDER ITS PATENT RIGHTS, NOR THE RIGHTS OF OTHERS.

LIFE SUPPORT POLICY

FAIRCHILD'S PRODUCTS ARE NOT AUTHORIZED FOR USE AS CRITICAL COMPONENTS IN LIFE SUPPORT DEVICES OR SYSTEMS WITHOUT THE EXPRESS WRITTEN APPROVAL OF THE PRESIDENT OF FAIRCHILD SEMICONDUCTOR CORPORATION. As used herein:

1. Life support devices or systems are devices or systems which, (a) are intended for surgical implant into the body, or (b) support or sustain life, and (c) whose failure to perform when properly used in accordance with instructions for use provided in the labeling, can be reasonably expected to result in a significant injury of the user.
2. A critical component in any component of a life support device or system whose failure to perform can be reasonably expected to cause the failure of the life support device or system, or to affect its safety or effectiveness.

© 2003 Fairchild Semiconductor Corporation

ON Semiconductor and ON are trademarks of Semiconductor Components Industries, LLC dba ON Semiconductor or its subsidiaries in the United States and/or other countries. ON Semiconductor owns the rights to a number of patents, trademarks, copyrights, trade secrets, and other intellectual property. A listing of ON Semiconductor's product/patent coverage may be accessed at www.onsemi.com/site/pdf/Patent−Marking.pdf. ON Semiconductor reserves the right to make changes without further notice to any products herein. ON Semiconductor makes no warranty, representation or guarantee regarding the suitability of its products for any particular purpose, nor does ON Semiconductor assume any liability arising out of the application or use of any product or circuit, and specifically disclaims any and all liability, including without limitation special, consequential or incidental damages. Buyer is responsible for its products and applications using ON Semiconductor products, including compliance with all laws, regulations and safety requirements or standards, regardless of any support or applications information provided by ON Semiconductor. "Typical" parameters which may be provided in ON Semiconductor data sheets and/or specifications can and do vary in different applications and actual performance may vary over time. All operating parameters, including "Typicals" must be validated for each customer application by customer's technical experts. ON Semiconductor does not convey any license under its patent rights nor the rights of others. ON Semiconductor products are not designed, intended, or authorized for use as a critical component in life support systems or any FDA Class 3 medical devices or medical devices with a same or similar classification in a foreign jurisdiction or any devices intended for implantation in the human body. Should Buyer purchase or use ON Semiconductor products for any such unintended or unauthorized application, Buyer shall indemnify and hold ON Semiconductor and its officers, employees, subsidiaries, affiliates, and distributors harmless against all claims, costs, damages, and expenses, and reasonable attorney fees arising out of, directly or indirectly, any claim of personal injury or death associated with such unintended or unauthorized use, even if such claim alleges that ON Semiconductor was negligent regarding the design or manufacture of the part. ON Semiconductor is an Equal Opportunity/Affirmative Action Employer. This literature is subject to all applicable copyright laws and is not for resale in any manner.

PUBLICATION ORDERING INFORMATION

LITERATURE FULFILLMENT:
Literature Distribution Center for ON Semiconductor
19521 E. 32nd Pkwy, Aurora, Colorado 80011 USA
Phone: 303−675−2175 or 800−344−3860 Toll Free USA/Canada
Fax: 303−675−2176 or 800−344−3867 Toll Free USA/Canada
Email: orderlit@onsemi.com

N. American Technical Support: 800−282−9855 Toll Free USA/Canada
Europe, Middle East and Africa Technical Support:
Phone: 421 33 790 2910
Japan Customer Focus Center
Phone: 81−3−5817−1050

ON Semiconductor Website: **www.onsemi.com**

Order Literature: http://www.onsemi.com/orderlit

For additional information, please contact your local Sales Representative

ENTEGRECİ

Bu belge www.entegreci.com üzerinden sunulmaktadır.

Elektronik komponent tedarikinde Entegreci

Entegreci, Eskişehir merkezli, Türkiye geneline satış yapan bir elektronik komponent mağazasıdır. Entegreler (IC), mikrodenetleyiciler, transistörler, diyotlar, pasif elemanlar, konnektörler, modüller ve geliştirme kartları tek adetten seri üretim adetlerine kadar satılır. Ürün sayfalarında güncel stok durumunu, fiyatı ve datasheet bağlantısını bulabilirsiniz.

Parça koduyla arama

Üretici parça numarasını yazın; stok ve fiyatı hemen görün.

www.entegreci.com

Ürün kategorileri

Entegreden kapasitöre tüm elektronik komponent kategorileri.

Kategorilere göz atın

Üreticiler

Aradığınız üreticinin ürünlerini tek sayfada inceleyin.

Üreticileri görün

Toplu alım ve teklif

Listede olmayan ya da yüksek adetli parçalar için teklif isteyin.

Teklif isteyin

www.entegreci.com | **destek@entegreci.com** | **0850 305 90 34**

Entegreci is an online electronic components store based in Türkiye. Search by manufacturer part number to see stock, prices and datasheets for integrated circuits, microcontrollers, transistors, passive components and connectors, or request a quote for parts that are not listed.

Bu sayfa Entegreci tarafından eklenmiştir. Belgenin önceki sayfaları asıl yayıncısına aittir ve içeriği değiştirilmemiştir; en güncel sürüm için belgenin yayıncısına başvurun.