NO. DOCUMENT	REV
AA-767814-00A	0

PT. HARTONO ISTANA TEKNOLOGI

JL. K.H.R. ASNAWI PO BOX 126 KUDUS - INDONESIA

PHONE NO : (0291) 433255 (4 lines) ; 433266 (5 lines)

FAX NO : (0291) 431001 / 431030

SPECIFICATION FOR APPROVAL

DESCRIPTION = LF IC LA78141-E (VERTICAL DEFLECTION)

PART NUMBER = LA78141-E

SUPPLIER = POLYCORE

MANUFACTURER = SHIN_N

APPROVED BY :
DATE : 25 MARET 2009

RoHS
PT.HARTONO ISTANA TEKNOLOGI
RESEARCH & DEVELOPMENT DEPT.

ADI SUSANTO
R&D MANAGER

To : PT Hartono Indonesia

Data issued : Feb.20, 2009
Specification No.: PL6491-B
Issue No. : 20051226-S00010

(Newly issued) or ~~Amended~~

Lead-free External Terminals

DELIVERY SPECIFICATION

YOUR PRODUCT NAME: _____

YOUR PART NO. : _____

OUR TYPE NO. : LA78141-E

RECEIVED/APPROVED BY:

25/10/09 (SUTIYONO)

Note	Any modification including touchup, correction, addition, and delete invalidates this delivery specifications.
	Any and all SANYO Semiconductor Co.,Ltd. products described or contained herein are, with regard to "standard application", intended for the use as general electronics equipment (home appliances, AV equipment, communication device, office equipment, industrial equipment etc.). The products mentioned herein shall not be intended for use for any "special application" (medical equipment whose purpose is to sustain life, aerospace instrument, nuclear control device, burning appliances, transportation machine, traffic signal system, safety equipment etc) that shall require extremely high level of reliability and can directly threaten human lives in case of failure or malfunction of the product or may cause harm to human bodies, nor shall they grant any guarantee thereof. If you should intend to use our products for applications outside the standard applications of our customer who is considering such use and/or outside the scope of our intended standard applications, please consult with us prior to the intended use. If there is no consultation or inquiry before the intended use, our customer shall be solely responsible for the use.

Sales Representative
Person: MOHAMED ASHRAFF
Office : SANYO SEMICONDUCTOR (S) PTE., LTD.

SUPPLIER:
SANYO Semiconductor Co.,Ltd. Sales H.Q.
Sales Promoting Dept. Sales Promoting Sec.
1-1-1, Sakata Oizumi-machi, Ora-Gun,Gunma,370-0596, Japan
Telephone: 0276-61-8058

Approved Signature
AKIRA SHIRAKAWA

Prepared Signature
MISAO HIRUKAWA

MQA OK

Revision Record

To : PT Hartono Indonesia

Product Name : LA78141-E

Date of entry	Time of implementation	Contents of revision	Reason for revision	Marking on product
Feb.20, 2009		·Newly adopted		

The effective period of this delivery specification is as follows: final delivery specification – 3 years, provisional delivery specification – 3 months, and temporary delivery specification – 1 month.
The period is extended by one more year when the description content is not changed by addition, alteration, etc. even after expiration date. The same applies to subsequent periods.
When it is not returned, we will regard this as your having received and approved the specification.

SANYO SANYO Semiconductor Co., Ltd.

MQA
OK

納 入 仕 様 書
DELIVERY SPECIFICATIONS

前回仕様書Ｎｏ.
LAST SPECIFICATIONS No.

製品名／PRODUCT PART NAME:　ＬＡ７８１４１－Ｅ

DATE　.　.

1．外　形：２２０－７Ｈ　プラスチック・パッケージ
Case Outline: 220-7H Plastic Package

2．機　能：垂直出力，垂直ドライブ，ポンプアップ
Functions: Vertical Output, Vertical Drive, Pump-up

3．用　途：BUS 対応，テレビ・ディスプレイ用垂直出力
Applications: BUS Supported TV Display Vertical Output

4．絶対最大定格／Ｔａ＝２５℃
Absolute Maximum Ratings at Ta=25℃

項　目 Parameter	記号 Symbol	条　件 Conditions	定格値 Ratings	単位 Unit
ポンプアップ部電源電圧 Pump-up block supply voltage	+B2 max		37.5	V
出力部電源電圧 Output block supply voltage	+B6 max		77	V
許容消費電力 Allowable power dissipation	Pd max	無限大放熱板付 With an infinite heat sink	9	W
偏向出力電流 Deflection output current	I5 max		-1.9 to +1.9	Ap-o
熱抵抗 Thermal resistance	θj-c		3	℃/W
動作周囲温度 Operating temperature	Topr		-20 to +85	℃
保存周囲温度 Storage temperature	Tstg		-40 to +150	℃

5．動作条件／Ｔａ＝２５℃
Operating Conditions at Ta=25℃

項　目 Parameter	記号 Symbol	条　件 Conditions	定格値 Ratings	単位 Unit
推奨電源電圧 Recommended supply voltage	+B2		30	V
動作電源電圧範囲 Operating supply voltage range	+B2op		16 to 37	V
偏向出力電流 Deflection output current	I5p-p		to 3.0	Ap-p

MQA OK

6．動作特性／Ｔａ＝２５℃，＋Ｂ２＝３０Ｖ
Operating Characteristics at Ta=25℃, +B2=30V

項　　目 Parameter	記 号 Symbol	条　　件 Conditions	Min	Typ	Max	単 位 Unit	測定回路 Test Circuit
偏向出力飽和電圧（下） Deflection output saturation voltage (lower)	Vsat5-4	I5=1.5A			1.7	V	1
偏向出力飽和電圧（上） Deflection output saturation voltage (upper)	Vsat6-5	I5=-1.5A			3.7	V	2
ﾎﾟﾝﾌﾟｱｯﾌﾟ充電飽和電圧 Pump-up charge saturation voltage	Vsat3-4	I3=20mA			1.8	V	3
ﾎﾟﾝﾌﾟｱｯﾌﾟ放電飽和電圧 Pump-up discharge saturation voltage	Vsat2-3	I3=-1.5A			3.4	V	4
ｱｲﾄﾞﾘﾝｸﾞ電流 Idling current	Idl		23		53	mA	5
中点電圧 Midpoint voltage	Vmid		14.0	15.0	16.0	V	5

注）＋はＩＣに流入する電流，－はＩＣから流出する電流
Note: Current flowing into the IC is positive and current flowing out is negative.

MQA OK

ピン接続及び機能ブロック図/Pin Connections and Functional Block Diagram

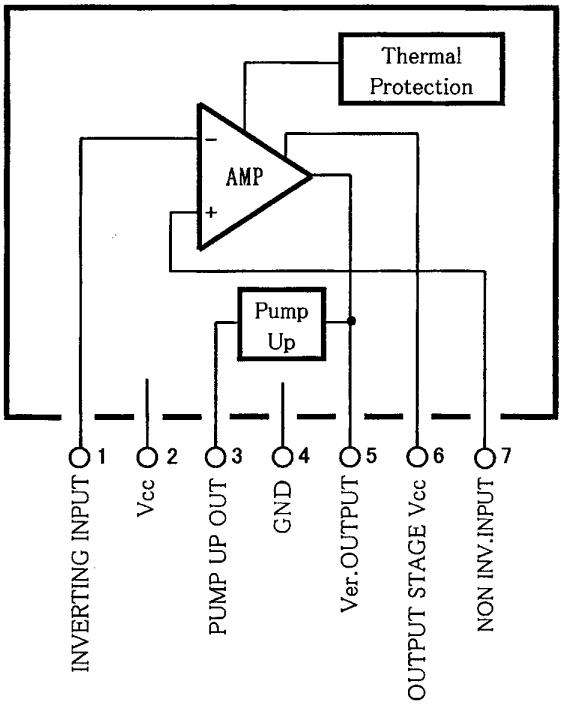

応用回路例/Sample application

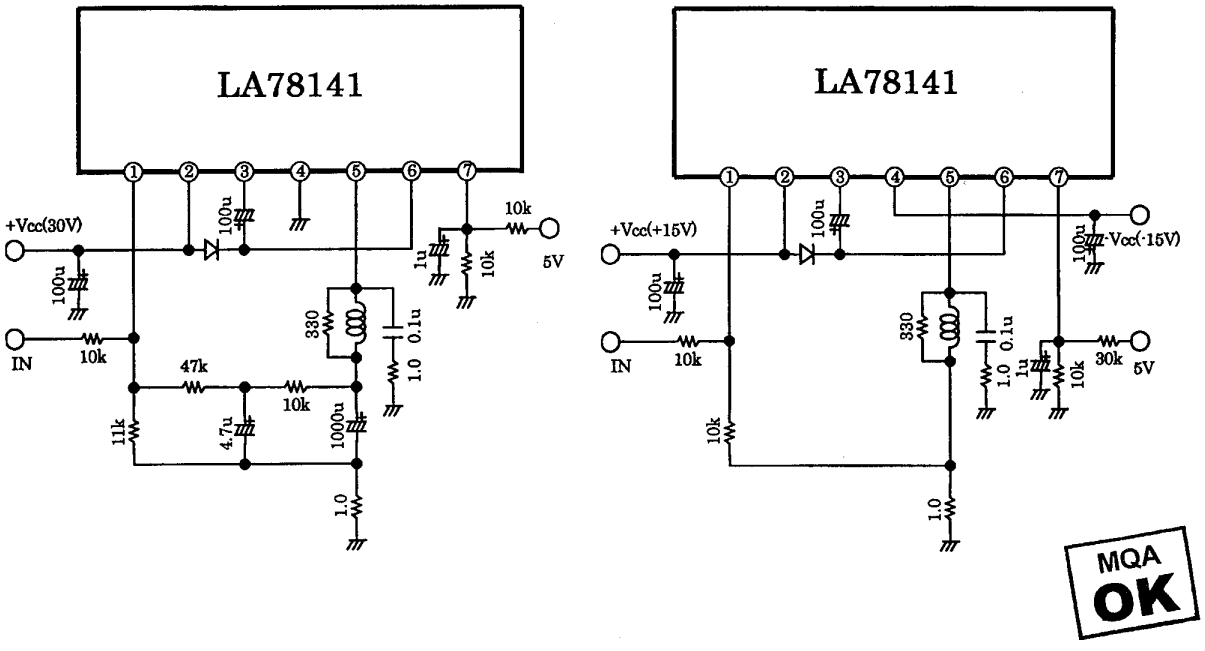

測定回路図/Test Circuit

記号の単位/Unit
コンデンサ Capacitance : F
抵抗/Resistance : Ω

1．出力飽和電圧（下）/Output saturation voltage (lower) Vsat5-4

図1/Fig.1

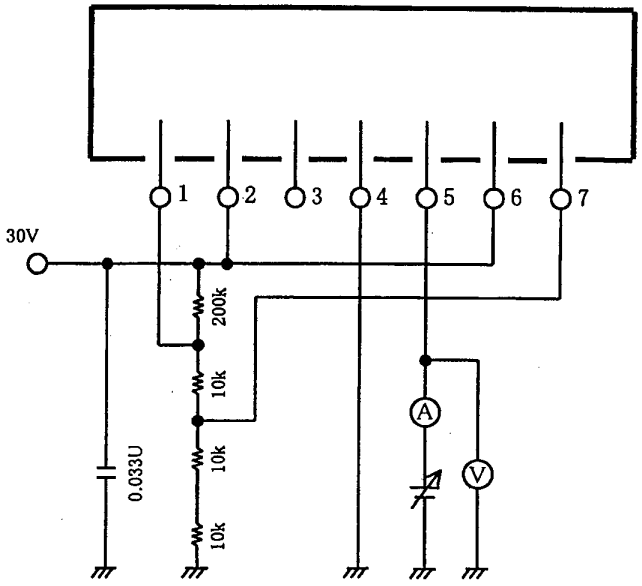

図1の回路で、電流計 Ⓐ の値が1.5Aの時の電圧計 Ⓥ の値を読む。
Read the reading on voltmeter Ⓥ when ammeter Ⓐ reads 1.5A in Fig.1.

2．出力飽和電圧（上）/Output saturation voltage (upper) Vsat6-5

図2/Fig.2

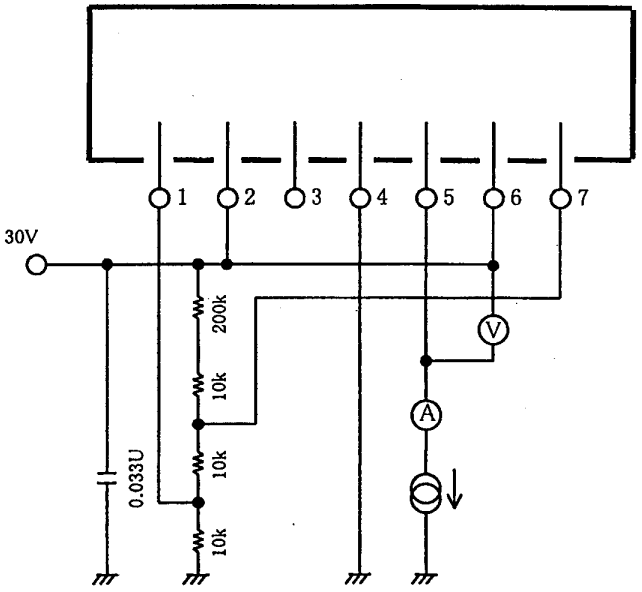

図2の回路で、5ピンより電子負荷で吸収し、電流計 Ⓐ の値が 1.5 A の時の電圧計 Ⓥ の値を読む。
Absorb current from pin 5 into an electronics load and read the reading on voltmeter Ⓥ when ammeter Ⓐ reads 1.5A in Fig.2.

MQA OK

3．ﾎﾟﾝﾌﾟｱｯﾌﾟ充電飽和電圧/Pump-up charge saturation voltage　Vsat3-4

記号の単位/Unit
コンデンサ/Capacitance：F
抵抗/Resistance：Ω

図3/Fig.3

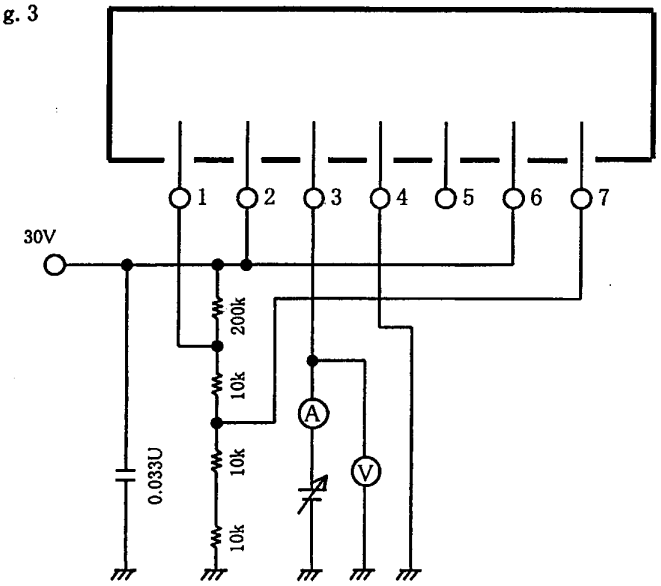

図3の回路で、電流計 Ⓐ の値が20mAの時の電圧計 Ⓥ の値を読む。
Read the reading on voltmeter Ⓥ when ammeter Ⓐ reads 20mA in Fig.3.

4．ﾎﾟﾝﾌﾟｱｯﾌﾟ放電飽和電圧/Pump-up discharge saturation voltage　Vsat2-3

図4/Fig.4

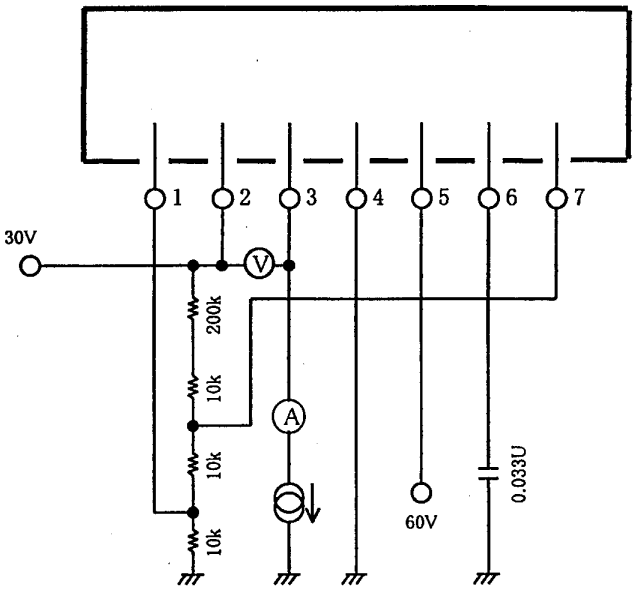

図4の回路で、3ピンより電子負荷で吸収し、電流計 Ⓐ の値が 1.5Aの時の電圧計 Ⓥ の値を読む。
Absorb current from pin 3 into an electronics load and read the reading on voltmeter Ⓥ when ammeter Ⓐ reads 1.5A in Fig.4.

MQA OK

7．ｱｲﾄﾞﾘﾝｸﾞ電流/Idling current　Idl

8．中点電圧/Midpoint voltage　　Vmid

図５/Fig.5

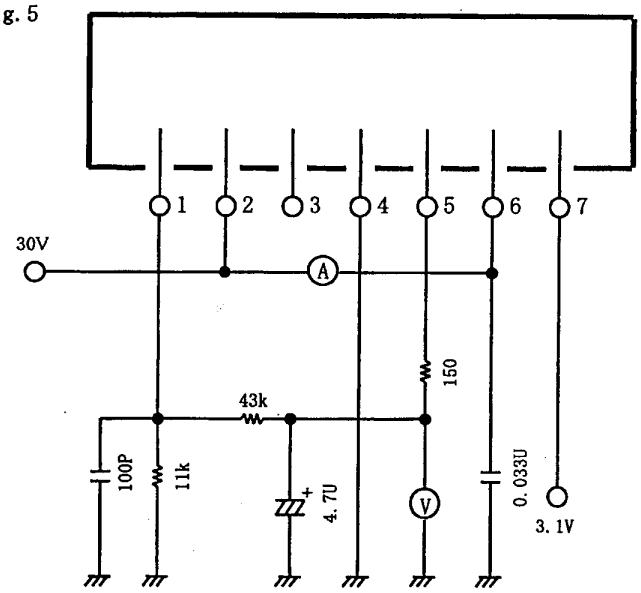

記号の単位/Unit

コンデンサ/Capacitance：F

抵抗/Resistance：Ω

図５の回路で、電流計 Ⓐ の値を読む。

図５の回路で、電圧計 Ⓥ の値を読む。

Read the reading on ammeter Ⓐ in Fig.5.

Read the reading on voltmeter Ⓥ in Fig.5.

MQA OK

OUTLINE DRAWING

SANYO

SANYO Package Code	JEITA Package Code	JEDEC Package Code	TYPE NUMBER	ENACT No.	Mass(g)	Unit
220-7H	——	——	LA78141(-***-E)	S-187	2.0	mm

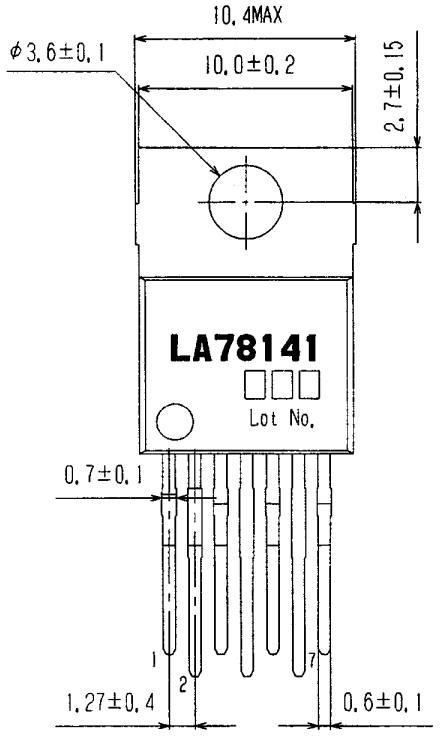

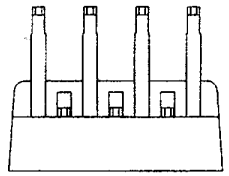

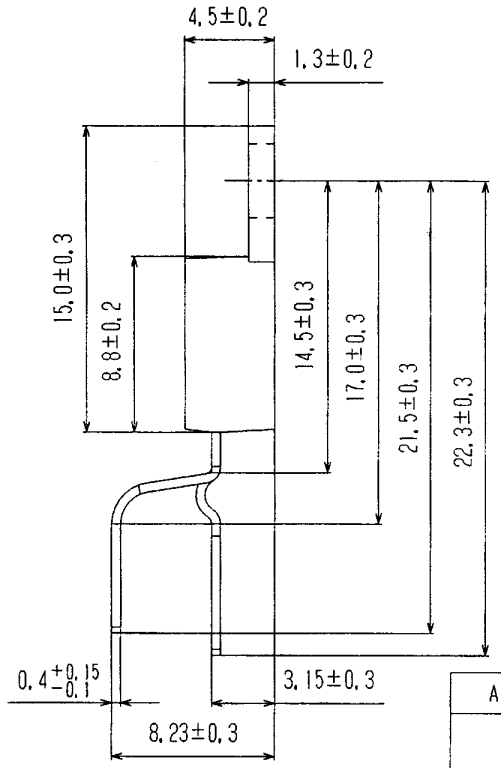

Appearance

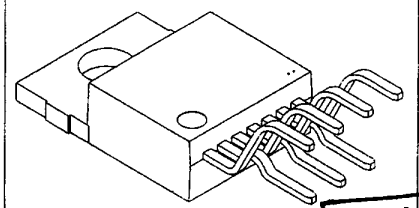

MQA OK

220

CHECK	DRAWN	DATE
M. Tsubonoya	K. Shibusawa	2008.04.03

No.7

REVISION : 2

SANYO : TO-220

LA78141-E Recommended Mounting Conditions

(1) Soldering iron Max. Temperature/Time: 380°C, 3s 1time

(2) Flow Soldering Max. Temperature/Time: 260°C, 10s 1time

MQA
OK

Packing Specification of Magazine(stick)

TO-220-5H/5HST/5HFA/5H-HJ/5HMDB/5HK・TO-220-7H・SMP5

Magazine Name	SANYO Package code	Maximum number of ICs contained (pcs.)			Packing form	
		Bag	Inner box	Outer box	Inner box. BOX(MG-4)	Outer box. L-BOX(MG-4)
MAGAZINE (TO-220・5H)	TO-220-5H/5HST 5HFA/5H-HJ 5HMDB/5HK TO-220-7H SMP5	50	600	3,600	Magazine 12 sticks Dimensions:mm 100×52×551	6 inner boxes contained Dimensions:mm 217×185×567

Magazine dimension

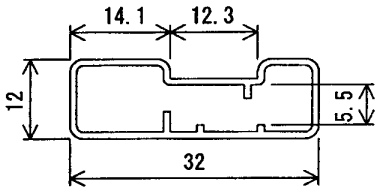

t = 0.7 mm
l = 538 mm
Material = PVC(anti-static)

Bar Code Label

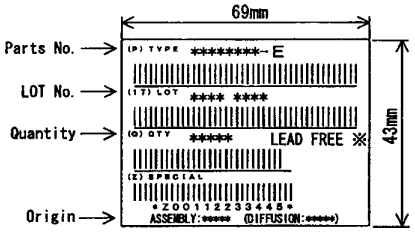

Shipping Label

It is a label at the time of factory shipments.
The form of a label may change in physical distribution process.

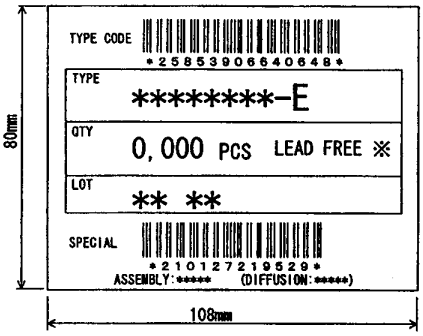

Insert direction to the magazine

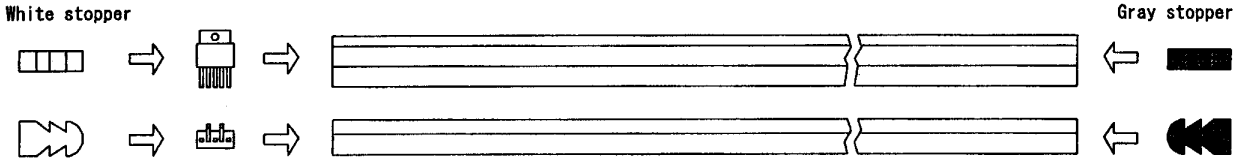

Packing Method

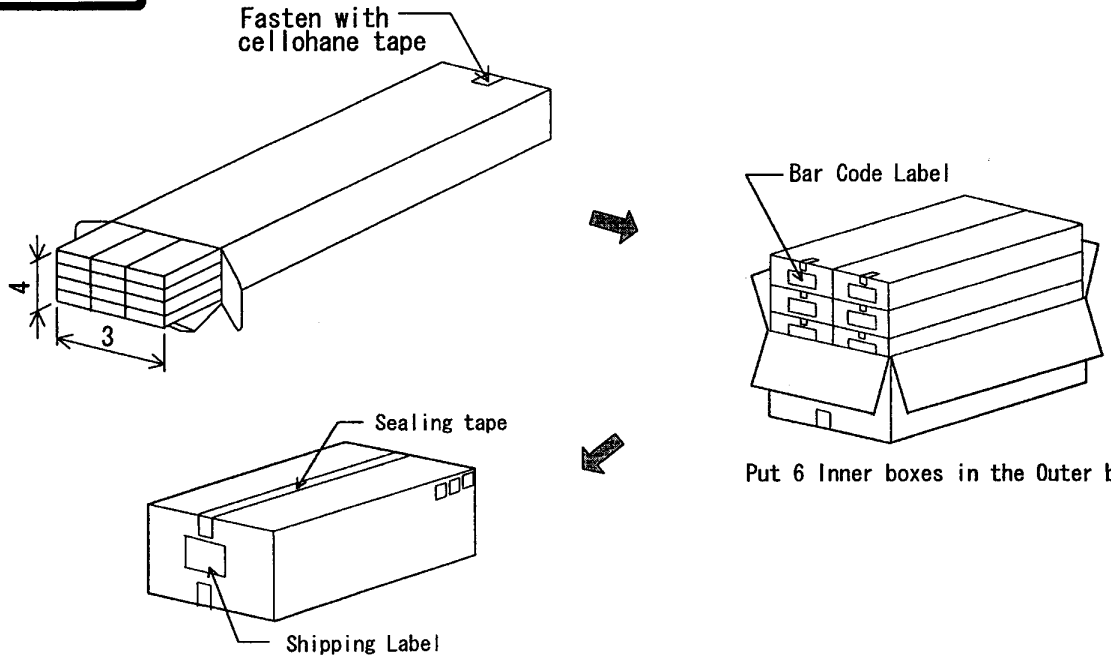

Put 6 Inner boxes in the Outer box.

MQA OK

BIP Semiconductor Device Usage Notes

Always follow the recommendation in this document, "BIP Semiconductor Device Usage Notes," when using BIP semiconductor devices and be sure to use the devices correctly.

1. Derating Design

Derating is to decrease electrical or mechanical stresses, that devices can withstand, below the maximum ratings to operate them in the less severe conditions to reduce the failure rate.

Stresses that are to be derated include voltage, current, junction temperature, power loss, and mechanical stresses such as vibration, shock, and tension.

When designing, therefore, reduce or minimize these stresses as much as possible.

The followings are guidelines for derating design.

(1) For voltage ratings: a maximum value less than 80% of the rating

(2) For current ratings: a maximum value less than 80% of the rating

(3) For temperature ratings: a maximum value less than 80% of the rating

2. Maximum Ratings and Recommended (or Allowable) Operating Ranges (See Fig.2.)

(1) Maximum ratings

The maximum ratings represent the limiting value for semiconductor device usage, and are defined in the JIS standards (JIS C 7032) as limit values that must not be exceeded even momentarily, or, when two or more item limit values are stipulated, as limit values such that the rated values for two items may not be reached at the same time. Beyond these limit values, the semiconductor devices may develop failure or fuming/ignition due to internal heat generation.

The remainder of this section describes certain representative maximum ratings for semiconductor devices.

a. Maximum power-supply voltage or maximum supply voltage

The maximum voltage that can be applied between the V_{CC} pin and the GND pin.

b. Allowable power dissipation

The maximum power dissipation that the semiconductor devices allows.

- This value is sometimes determined by the power dissipated by the semiconductor device.

c. Operating ambient temperature

The temperature range in which the semiconductor device will operate with correct circuit functionality as long as the device remains with the recommended operating or allowable operating range.

d. Storage ambient temperature

The temperature range in which the semiconductor device may be stored in the non-operational state.

In general, the maximum storage ambient temperature is set equivalent to the maximum junction temperature.

(2) Recommended (or allowable) operating ranges

These ranges are where the circuit functions correctly.

MQA
OK

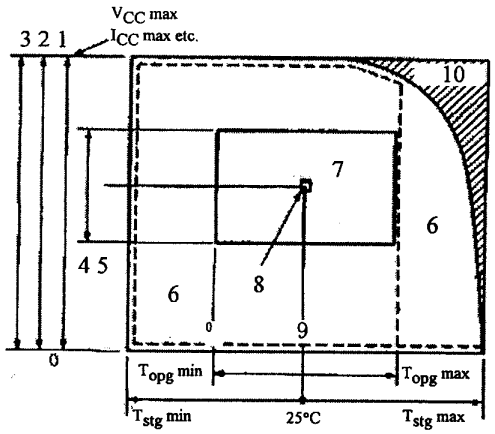

1. Supply voltage
2. Supply current
3. Others
4. Allowable operating range
5. Recommended operating range
6. Guarantee of no breakdown
7. Guarantee of functions
8. Guarantee of operation characteristics
9. Operating ambient temperature
10. No guarantee

Fig.2 Maximum rating and recommended (or allowable) operation range

3. Circuit Design

Caution

- SANYO Semiconductor Co.,Ltd. assumes no responsibility for equipment failures that result from using products at values that exceed, even momentarily, rated values (such as maximum ratings, operating condition ranges, or other parameters) listed in products specifications of any and all SANYO Semiconductor Co.,Ltd. products described or contained herein.
- SANYO Semiconductor Co.,Ltd. strives to supply high-quality high-reliability products, however, any and all semiconductor products fail or malfunction with some probability. It is possible that these probabilistic failures or malfunction could give rise to accidents or events that could endanger human lives, trouble that could give rise to smoke or fire, or accidents that could cause damage to other property. When designing equipment, adopt safety measures so that these kinds of accidents or events cannot occur. Such measures include but are not limited to protective circuits and error prevention circuits for safe design, redundant design, and structural design.

When actually designing circuits, take the following issues into account and assure that none of the maximum rating items as described above are exceeded.

- Variations in the supply voltage
- Manufacturing variations and tolerances in the electrical characteristics of the electrical components used (semiconductor devices, resistors, capacitors)
- Ambient temperature
- Variations in input and clock signals
- Application of abnormal pulses

Always use products that have allowable operating range specifications within those specified values, and, if at all possible, use products that have recommended operating range (or condition) specifications within those specified values. It goes without saying that derating should be applied whenever possible.

MQA
OK

4. Characteristic Guarantees

Caution

- Specifications of any and all SANYO Semiconductor Co.,Ltd. products described or contained herein stipulate the performance, characteristics, and functions of the described products in the independent state, and are not guarantees of the performance, characteristics, and functions of the described products as mounted in the customer's products or equipment. To verify symptoms and states that cannot be evaluated in an independent device, the customer should always evaluate and test devices mounted in the customer's products or equipment.

5. Notes on Linear and Digital ICs

(1) Design transformers and other power supply elements so that voltages applied to semiconductor device power supply pins do not exceed the maximum ratings due to power line voltage fluctuations.

(2) Unless otherwise specified in the specifications, design each pin (in particular, power and input/output pins) so that the negative voltage is not applied.

(3) As a rule, application of the voltage either higher than the Vcc pin voltage or lower than the GND pin voltage to input and output pins may cause damage due to parasitic effect. Unless otherwise specified in the specifications, design input and output pins so that these voltages are not applied, except for a model in which the input zero bias circuit or boot strap circuit are incorporated in the power IC, etc.
Be sure to read the specifications with care because there are device-specific notes.

(4) For products that require heat sinks, such as power ICs, the thermal design should provide ample margin so that the maximum allowable power dissipation is not exceeded, based on power line voltage, load, and ambient temperature conditions.

(5) When power ICs, large resistors, or other heat-generating devices are used, end-product design should provide ample ventilation and physical isolation of such devices.

(6) Design the printed circuit board pattern layout carefully to prevent device destruction due to short-circuiting between pins.

(7) Semiconductor devices may be damaged or destroyed by surge voltages induced by high-voltage or high-frequency devices used in the vicinity or by the layout of wiring lines.

(8) Wrong connection of semiconductor devices, connection to wrong pins, and short-circuiting can lead to the maximum current or power dissipation, which can degrade or damage the device.

(9) When using a given device in a different product, reevaluate the design for device-damaging conditions.
Example: When using a semiconductor device previously used in a car stereo in a radio cassette recorder, carefully evaluate power supply regulation and other aspects in the new product.

(10) Since semiconductor devices are often destroyed during switching when inductive loads, such as motor coils or transformers, are driven, applications should be designed so that load currents cannot enter the circuits if this is not determined in the specifications.

(11) External circuit constants should be the circuit constant of the specifications as much as possible.

(12) If the types of external components is specified, be sure to use components of the specified type. For example, some types of capacitor cause oscillations at low temperatures.

(13) Semiconductor devices, such as power ICs used in radios or radio cassette recorders, should be placed at an adequate distance from the bar antenna so that extraneous radiation does not enter and influence the high-frequency block.

(14) Check for I/O coupling carefully
Possibilities include high-frequency coupling, coupling through the ground system, and coupling through the VCC line.

(15) Use a pattern and layout as similar to that given in the recommended pattern figure as possible.
Particular care should be taken with respect to the input and output grounds, since problems in these areas can degrade distortion characteristics and cause oscillations.

(16) Use components with low leakage currents and low thermal noise for the external components used with low-noise semiconductor devices, such as preamplifiers.

(17) Changing the values of external circuit constants can change circuit distortion, noise, frequency characteristics, rise times, and other characteristics. Changes to circuit constants should be analyzed carefully.

(18) When using a semiconductor device in a different product, reanalyze the circuit design carefully.

(19) Check noise margins carefully. AC noise from internal or external sources may be reduced by short-circuiting through a low impedance. In particular, since VCC and ground lines can be quite long, the impedance should be lowered as much as possible.

MQA
OK

(20) Problems associated with output capacitive loads
When a capacitor is inserted between the output and ground, that capacitor is charged and discharged through the semiconductor device's output transistor as the output goes to the high and low levels. This means that if an excessively large capacitor is inserted, instantaneous overcurrent that can destroy the device may occur.
When selecting the capacitance to use, capacitors of 0.1μF or lower should generally be used because the output period and the semiconductor device's maximum output current are of concern.
Techniques for suppressing instantaneous currents include inserting series resistors as protective resistors.

(21) When inductive loads such as relays are connected, prevent overvoltage from being applied to the device by inserting protective diodes.
When driving the L loads such as relays or solenoids at high voltages and high currents, VCE(SUS) must be taken into consideration. Since the device may be destroyed if the load line crosses the sustaining curve, devices must be used within their VCE(SUS) specifications. When ASO is specified, such model must be used within the ASO range.

(22) Take care not to allow noise (glitch) around the set to cause malfunction.

(23) Depending on the supply voltage, the semiconductor device condition may not be set and may become unstable. Check the device with the voltage of an actual set.

(24) When a customer sets the use conditions, the semiconductor device operation may become unstable when input/output pins are open. Be sure to read the specifications or consult your Sanyo representative.

(25) Be sure to read the specifications with care because there are device-specific notes.

6. Notes on Device Transport

(1) When transporting semiconductor devices, avoid mechanical vibrations and shocks as much as possible.
Use conductive containers. Do not use materials that easily accumulate static charges, such as vinyl bags, etc.

(2) Rapid atmospheric changes after moving storage locations when transporting devices can result in condensation.

7. Handling during Mounting

(1) There are unused pins that are not explicitly marked for connection in equivalent circuit block or pin layout diagrams or marked as NC (no connect) pins. Do not use these pins as intermediate connection points and keep them open. Some of these pins are actually connected internally to the device, and even pins that are not connected internally can cause unexpected problems, such as oscillations.

(2) Do not apply unreasonable stress to semiconductor device pins when mounting devices on printed circuit boards. Also be sure to adequately separate VCC and ground lines from other lines in high-voltage ICs.

(3) Do not use circuit testers (commonly referred to as "testers") to determine whether semiconductor devices are defective or not. Otherwise, the semiconductor devices may de damaged or degraded.

(4) Do not bend or cut pins before mounting.

(5) When mounting a device on a printed circuit boards, never mount the device in an incorrect orientation. If power is applied with pins connected incorrectly, the device may be destroyed.

(6) Always verify that there is no AC leakage from soldering irons. We recommend grounding soldering irons if it is inconvenient to check for leakage.

(7) The use of strongly acidic or strongly alkaline fluxes in soldering can corrode device pins and adversely affect device characteristics.
To ensure reliability of the system, remove flux and other impurities from soldering.

(8) After soldering, always verify that an adequate amount of solder was applied. Soldering deficiencies (dry joints or air-spaces) can be mistakenly taken to be defective semiconductor devices, so caution is required.

(9) Solder bridge between pins of semiconductor device and dry joints described above may cause damage to the device. Check the printed circuit board visually with care before application of the voltage.
Troubles can often be detected by observing the output, supply current, etc. while raising Vcc from a low voltage to the required level during power application.

(10) Check the human body, measuring instrument, work bench and belt conveyor for any AC leakage from electric equipment. The work bench and belt conveyor should also be provided with the anti-static measure.

(11) Adopt anti-static measures such as humidity control at times when static electricity can occur easily.

(12) When working with semiconductor devices on a workbench, grounded conductive mats with a series resistor of about 1 MΩ should be spread on the workbenches.

(13) After mounting semiconductor devices on a printed circuit board, if at all possible, short-circuit all printed circuit board socket pins to the semiconductor devices ground using a grounding plate, and if necessary, wrap the printed circuit board in conductive materials.

(14) In all cases where personnel touch semiconductor devices, they should be grounded with a wrist band connected to ground.

(15) Design wiring and the operating procedures so that static electricity cannot jump directly onto semiconductor devices.

MQA
OK
No. 13

(16) Heat sink attachment

Heat sinks are used to lower the semiconductor device junction temperature by leading the head generated by the device to the outer environment and dissipating that heat.

a. Unless otherwise specified, for power ICs with tabs and power ICs with attached heat sinks, solder must not be applied to the heat sink or tabs.

b. Use flat-head screws to attach heat sinks. Use tightening torques in the ranges listed in Table 1.
In cases where the tightening time is extremely short when torque drivers with attached stops are used, select the speed (in rpm) carefully when using electric or compressed air drivers, since mechanical shock is transmitted to the semiconductor device as stress.
The speed of these torque wrenches should never exceed 700 rpm, and should typically be about 400 rpm.

Table 1 Tightening Torque

Package type	Tightening torque
SIP-4H and 5H	29 to 49 N·cm (3 to 5 kg·cm)
Others	39 to 59 N·cm (4 to 6 kg·cm)

c. Do not allow dirt, dust, or other contaminants to get between the semiconductor device and the tab or heat sink. Verify that there are no press burrs or screw-hole burrs on the heat sink.

d. Warping in heat sinks and printed circuit boards must be no more than 0.05 mm between screw holes, for either concave or convex warping. Twisting also must be limited to under 0.05 mm.

e. Spread the silicone grease evenly when mounting heat sinks.
Sanyo recommends YG-6260 (manufactured by Toshiba Silicone) as a mounting grease.

f. First mount the heat sink on the semiconductor device, and then mount that assembly on the printed circuit board.

g. When mounting the semiconductor device to the heat sink using jigs, etc., take care not to allow the device to ride onto the jig or positioning dowel. Design the jig so that no unreasonable mechanical stress is not applied to the semiconductor device.

h. Considerations for use of screw

(a) Use screws with heads that are equivalent to the binding-head machine screws stipulated in the JIS-B0101 standard. (See Fig.3.) Use also washer to protect the package.

(b) Do not use screws with heads that are similar to the countersunk-head machine screw shown in Figure 3.

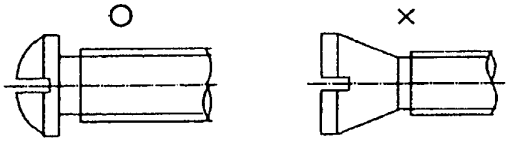

Binding-head machine-screw　　Countersunk head machine screw

Fig.3 Screw Type

(c) If tapping screws are used, observe the tightening torque listed in Table 1.

(d) If tapping screws are used, do not use screws with a diameter larger than the holes in the semiconductor device itself.

i. Heat sink screw holes

(a) Be sure that chamfering and shear drop of heat sinks must not be larger than the diameter of screw head used.

(b) When using nuts, do not make the heat sink hole diameters larger than the diameter of the head of the screws used. A hole diameter about 15% larger than the diameter of the screw is desirable.

(c) When tap screws are used, be sure that the diameter of the holes in the heat sink are not too small. A diameter about 15% smaller than the diameter of the screw is desirable.

j. There is a method to mount the semiconductor device to the heat sink by using a spring band. But this method is not recommended because of possible displacement due to fluctuation of the spring force with time or vibration.

MQA OK

k. To install TO-220 to heat sink, use a rectangular metal washer. (See Fig.4.)

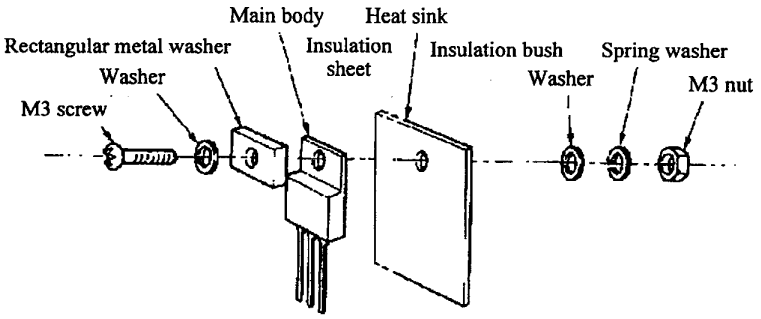

Fig.4 TO-220 system

(17) Except for certain models, the tab and heat sink installed to the heat sink plate are of the same potential as GND of the semiconductor device. As a rule, therefore, they must be short-circuited to GND. If not, voltage application to the tab or heat sink may cause breakdown.
As there may be cautions unique to the model, read the specification with care.

(18) Verify that switches on the power supply used, test equipment, and other items do not generate abnormal pulses when switched.

(19) Check the timing with which voltages are applied to the IC pins. As a general principle, the voltage between VCC and ground is the first voltage that should be applied to a semiconductor device. Read the specifications with care because there are device-specific notes.
If this timing is incorrect, the semiconductor device's equivalent circuit may not be established, and the device may be destroyed.

(20) During testing, large currents occasionally flow in the semiconductor device being tested, destroying the device. Insert a current limiting circuit in the power supply when testing. This is particularly important when testing power ICs.

(21) When supplying power from the original power supply to individual test jigs in parallel, attach a separate fast-blowing fuse in the test jig line.
Caution is also required when checking VCC.

(22) If large capacitors are used on the VCC or output pins, the semiconductor device may be destroyed if any pins are short-circuited immediately after the power supply is turned off.

(23) Observe the following three points when the power-supply voltage is applied.
a. Do not check pin voltages more than is necessary.
b. Do not insert or remove semiconductor devices.
c. Do not perform soldering operations.

(24) Design the test jigs used for acceptance inspection so that the test conditions in the specifications documents are fulfilled. We recommend replacing all semiconductor devices with the latest calibrated version.

8. Storage and use environments

(1) Cautions for storage and use of the semiconductor device are described below.
Inadequate attention to these points can result in degraded characteristics, defective soldering, and visible defects.
a. Store and use the device in a place where temperature and humidity change is small while avoiding direct sunshine as much as possible. **(Be sure to maintain the range of 5 - 30°C and 40 - 70% RH.)**
b. Store and use the device in a place less laden with dust.
c. Store and use the device in a place where corrosive gases (sulfide, chlorine gases) are not generated. In particular, due attention must be paid on rubber products because they tend to generate sulfide gas.
d. Use the product in a place free from high electric or magnetic field.
e. Do not apply excessive weights to semiconductor devices during storage.
f. Use a storage container that is difficult to be statically charged, such as a conductive container, etc.
g. Verify solderability and the lack of pin corrosion on semiconductor device that have been stored for one year or longer.

(2) In addition to the above points, unpackaged (bare) chips should be stored in a nitrogen atmosphere.

9. Application Areas (Fields)

Caution

- Items such as intellectual property rights
Upon using the technical information or products described herein, neither warranty nor license shall be granted with regard to intellectual property rights or any other rights of SANYO Semiconductor Co.,Ltd. or any third party. SANYO Semiconductor Co.,Ltd. shall not be liable for any claim or suits with regard to a third party's intellctual property rights which has resulted from the use of the technical information and products mentioned above.

SANYO

No.U301

Feb 16, 2009

HARTONO

Re: Prohibited substance of RoHS Directive

The following is our response to your inquiry.

1. Product to be investigated:
LA78141-E

2. Your request – Confirmation of RoHS Directive

3. Our response – The product above complies with RoHS Directive.
Though lead is used more than 85% for high melting point solder in the Preforming,
it is a RoHS exemption item.

We are focusing on environmental protection. In particular we are deploying an environmental system based on ISO 14001 as part of our commitment to creating products that are considerate of the environment.

If you have any inquires, please contact Mitsumasa Takano,
by e-mail at Tyousakaitou_Userkankyou@sanyo.com.

Yours truly,

T. Suganuma

Toshio Suganuma
General Manager
Environmental Promotion Dept.
Quality & Environment & CS Center
SANYO Semiconductor Co., Ltd.

MQA
OK

ENTEGRECİ

Bu belge www.entegreci.com üzerinden sunulmaktadır.

Elektronik komponent tedarikinde Entegreci

Entegreci, Eskişehir merkezli, Türkiye geneline satış yapan bir elektronik komponent mağazasıdır. Entegreler (IC), mikrodenetleyiciler, transistörler, diyotlar, pasif elemanlar, konnektörler, modüller ve geliştirme kartları tek adetten seri üretim adetlerine kadar satılır. Ürün sayfalarında güncel stok durumunu, fiyatı ve datasheet bağlantısını bulabilirsiniz.

Parça koduyla arama

Üretici parça numarasını yazın; stok ve fiyatı hemen görün.

www.entegreci.com

Ürün kategorileri

Entegreden kapasitöre tüm elektronik komponent kategorileri.

Kategorilere göz atın

Üreticiler

Aradığınız üreticinin ürünlerini tek sayfada inceleyin.

Üreticileri görün

Toplu alım ve teklif

Listede olmayan ya da yüksek adetli parçalar için teklif isteyin.

Teklif isteyin

www.entegreci.com | **destek@entegreci.com** | **0850 305 90 34**

Entegreci is an online electronic components store based in Türkiye. Search by manufacturer part number to see stock, prices and datasheets for integrated circuits, microcontrollers, transistors, passive components and connectors, or request a quote for parts that are not listed.

Bu sayfa Entegreci tarafından eklenmiştir. Belgenin önceki sayfaları asıl yayıncısına aittir ve içeriği değiştirilmemiştir; en güncel sürüm için belgenin yayıncısına başvurun.