NEC

MOS FIELD EFFECT TRANSISTOR
2SK3053

SWITCHING
N-CHANNEL POWER MOS FET
INDUSTRIAL USE

DESCRIPTION

The 2SK3053 is N-Channel MOS Field Effect Transistor designed for high current switching applications in consumer instruments.

ORDERING INFORMATION

PART NUMBER	PACKAGE
2SK3053	Isolated TO-220

FEATURES

- Low On-State Resistance
  $R_{DS(on)1}$ = 45 mΩ MAX. (V_{GS} = 10 V, I_D = 13 A)
  $R_{DS(on)2}$ = 70 mΩ MAX. (V_{GS} = 4.0 V, I_D = 13 A)
- Low C_{iss} : C_{iss} = 790 pF TYP.
- Built-in Gate Protection Diode
- Isolated TO-220 package

(Isolated TO-220)

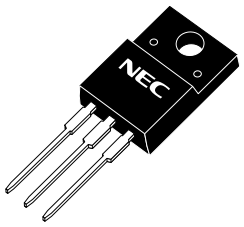

ABSOLUTE MAXIMUM RATINGS (T_A = 25 °C)

Drain to Source Voltage	V_{DSS}	60	V
Gate to Source Voltage	$V_{GSS(AC)}$	±20	V
Gate to Source Voltage	$V_{GSS(DC)}$	+20, –10	V
Drain Current (DC)	$I_{D(DC)}$	±25	A
Drain Current (Pulse) Note1	$I_{D(pulse)}$	±75	A
Total Power Dissipation (T_C = 25°C)	P_T	30	W
Total Power Dissipation (T_A = 25°C)	P_T	2.0	W
Channel Temperature	T_{ch}	150	°C
Storage Temperature	T_{stg}	–55 to +150	°C
Single Avalanche Current Note2	I_{AS}	12.5	A
Single Avalanche Energy Note2	E_{AS}	15.6	mJ

Notes 1. PW ≤ 10 μs, Duty cycle ≤ 1 %

★ **2.** Starting T_{ch} = 25 °C, V_{DD} = 30 V, R_G = 25 Ω, V_{GS} = 20 V → 0 V

The information in this document is subject to change without notice. Before using this document, please confirm that this is the latest version.
Not all devices/types available in every country. Please check with local NEC representative for availability and additional information.

Document No. D12912EJ3V0DS00 (3rd edition)
Date Published May 2001 NS CP(K)
Printed in Japan

The mark ★ shows major revised points.

© NEC Corporation 1999, 2000

ELECTRICAL CHARACTERISTICS (T_A = 25 °C)

	CHARACTERISTICS	SYMBOL	TEST CONDITIONS	MIN.	TYP.	MAX.	UNIT
	Drain to Source On-state Resistance	$R_{DS(on)1}$	V_{GS} = 10 V, I_D = 13 A		28	45	mΩ
		$R_{DS(on)2}$	V_{GS} = 4.0 V, I_D = 13 A		46	70	mΩ
	Gate to Source Cut-off Voltage	$V_{GS(off)}$	V_{DS} = 10 V, I_D = 1 mA	1.0	1.6	2.0	V
	Forward Transfer Admittance	$\|y_{fs}\|$	V_{DS} = 10 V, I_D = 13 A	8.0	16		S
	Drain Leakage Current	I_{DSS}	V_{DS} = 60 V, V_{GS} = 0 V			10	μA
	Gate to Source Leakage Current	I_{GSS}	V_{GS} = ±20 V, V_{DS} = 0 V			±10	μA
	Input Capacitance	C_{iss}	V_{DS} = 10 V		790		pF
	Output Capacitance	C_{oss}	V_{GS} = 0 V		240		pF
	Reverse Transfer Capacitance	C_{rss}	f = 1 MHz		100		pF
	Turn-on Delay Time	$t_{d(on)}$	I_D = 13 A		20		ns
★	Rise Time	t_r	V_{GS} = 10 V		200		ns
	Turn-off Delay Time	$t_{d(off)}$	V_{DD} = 30 V		65		ns
	Fall Time	t_f	R_G = 10 Ω		95		ns
	Total Gate Charge	Q_G	I_D = 25 A		20		nC
	Gate to Source Charge	Q_{GS}	V_{DD} = 48 V		3.0		nC
★	Gate to Drain Charge	Q_{GD}	V_{GS} = 10 V		6.5		nC
	Body Diode Forward Voltage	$V_{F(S-D)}$	I_F = 25 A, V_{GS} = 0 V		1.0		V
	Reverse Recovery Time	t_{rr}	I_F = 25 A, V_{GS} = 0 V		40		ns
	Reverse Recovery Charge	Q_{rr}	di/dt = 100 A/μs		45		nC

TEST CIRCUIT 1 AVALANCHE CAPABILITY

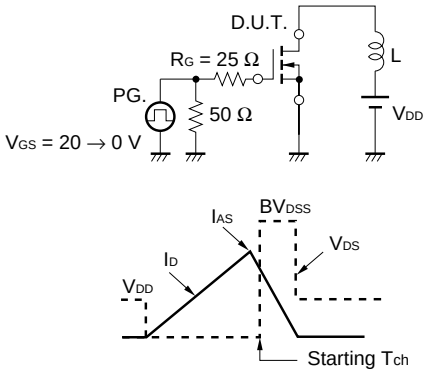

★ TEST CIRCUIT 2 SWITCHING TIME

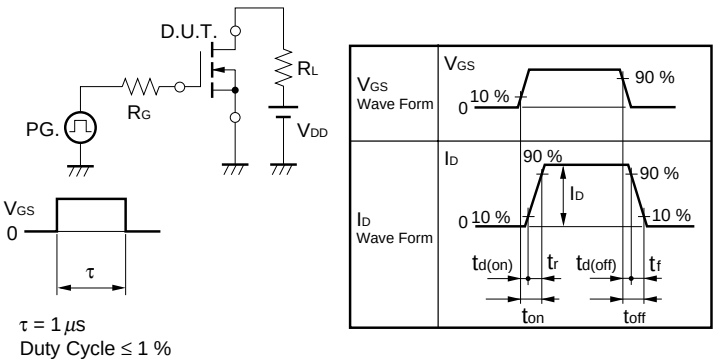

TEST CIRCUIT 3 GATE CHARGE

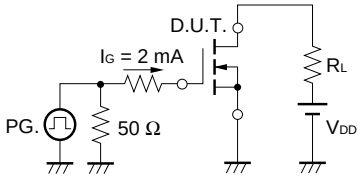

TYPICAL CHARACTERISTICS (T_A = 25 °C)

DERATING FACTOR OF FORWARD BIAS SAFE OPERATING AREA

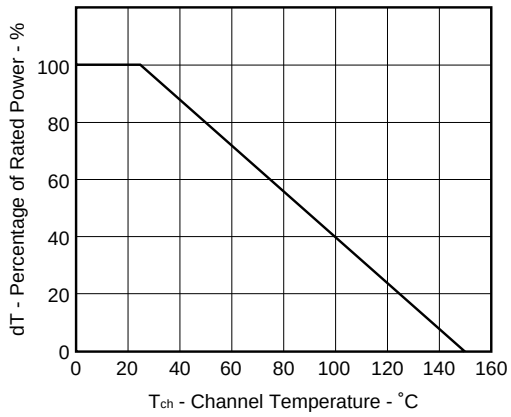

TOTAL POWER DISSIPATION vs. CASE TEMPERATURE

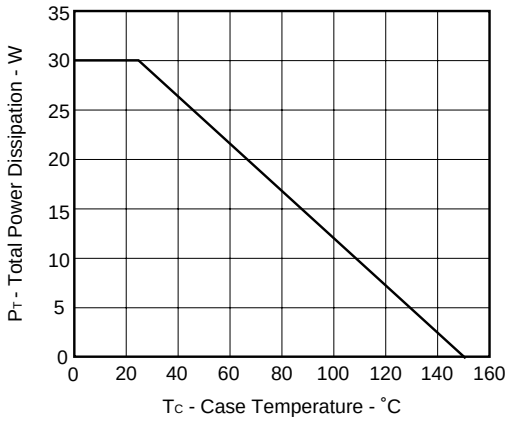

★ FORWARD BIAS SAFE OPERATING AREA

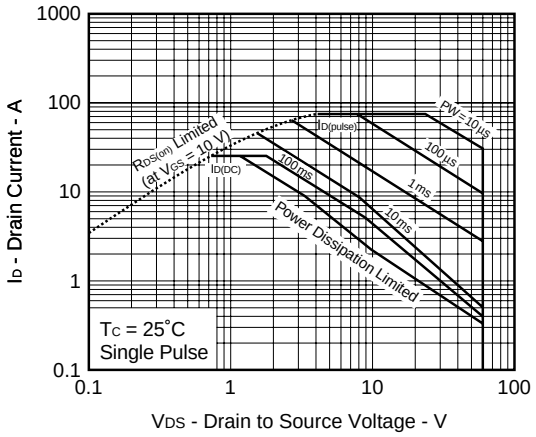

TRANSIENT THERMAL RESISTANCE vs. PULSE WIDTH

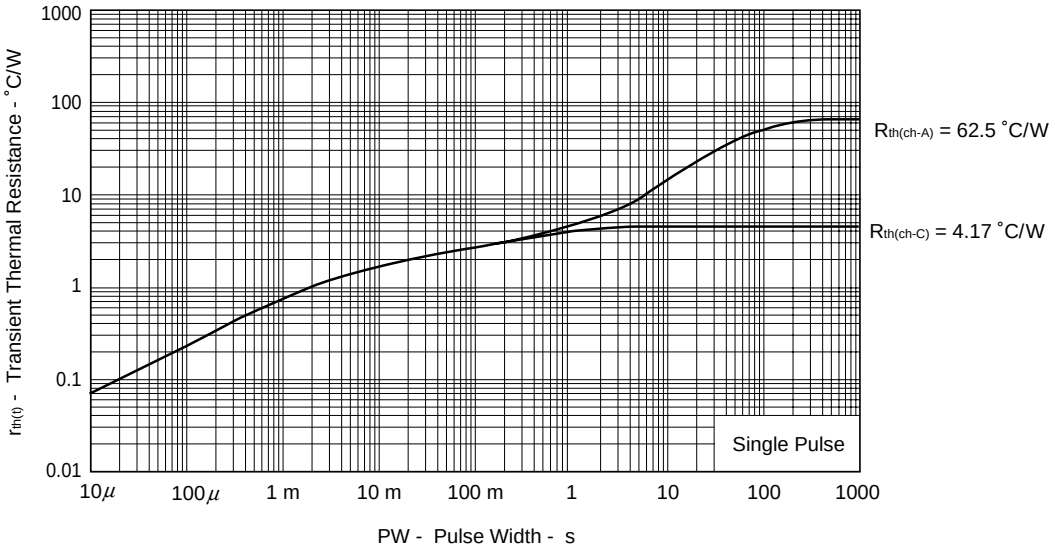

FORWARD TRANSFER CHARACTERISTICS

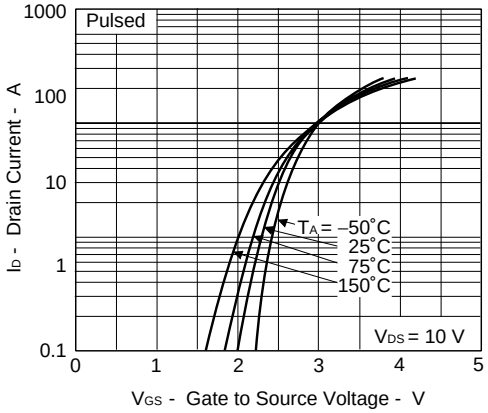

DRAIN CURRENT vs.
DRAIN TO SOURCE VOLTAGE

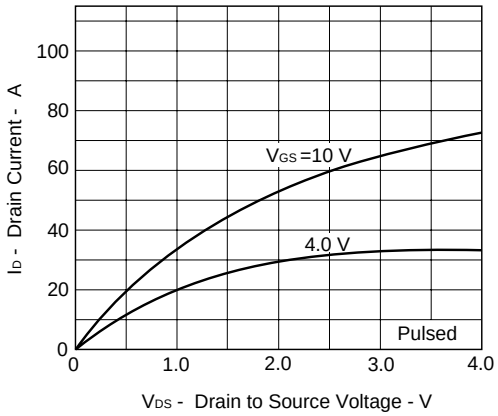

FORWARD TRANSFER ADMITTANCE vs.
DRAIN CURRENT

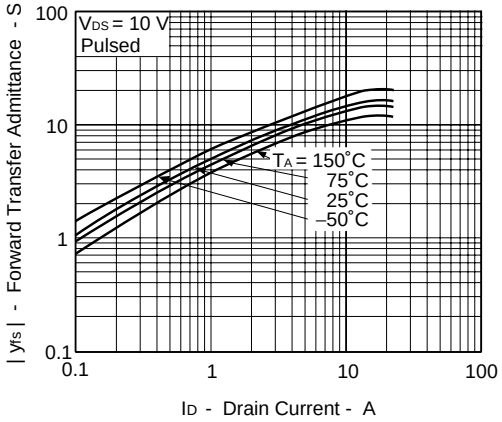

DRAIN TO SOURCE ON-STATE RESISTANCE vs.
GATE TO SOURCE VOLTAGE

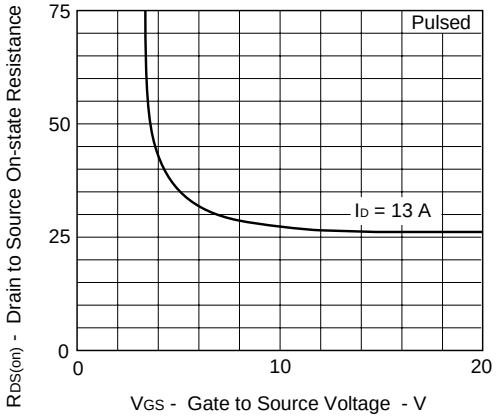

DRAIN TO SOURCE ON-STATE
RESISTANCE vs. DRAIN CURRENT

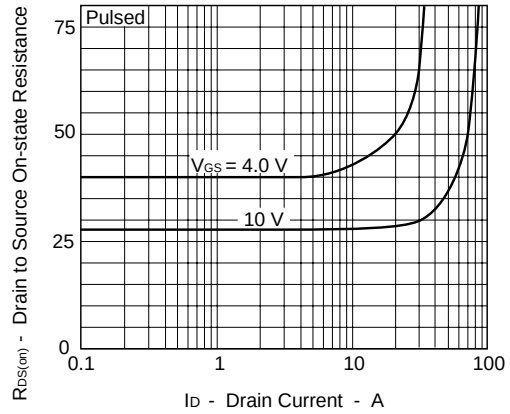

GATE TO SOURCE THRESHOLD VOLTAGE vs.
CHANNEL TEMPERATURE

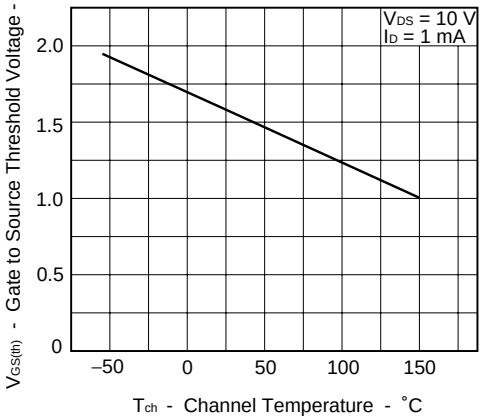

DRAIN TO SOURCE ON-STATE RESISTANCE vs. CHANNEL TEMPERATURE

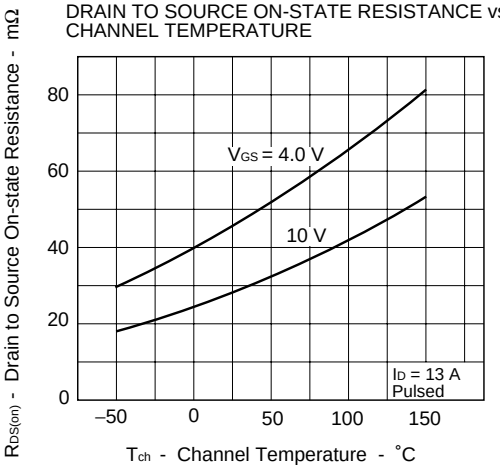

SOURCE TO DRAIN DIODE FORWARD VOLTAGE

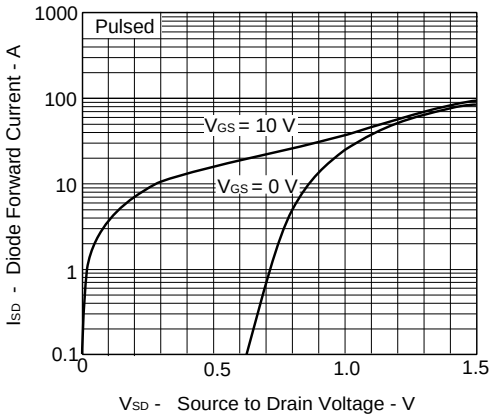

CAPACITANCE vs. DRAIN TO SOURCE VOLTAGE

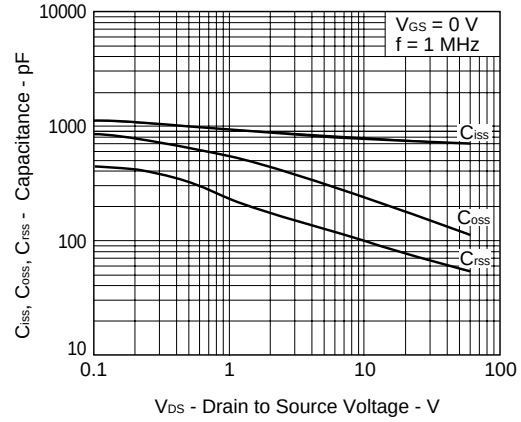

SWITCHING CHARACTERISTICS

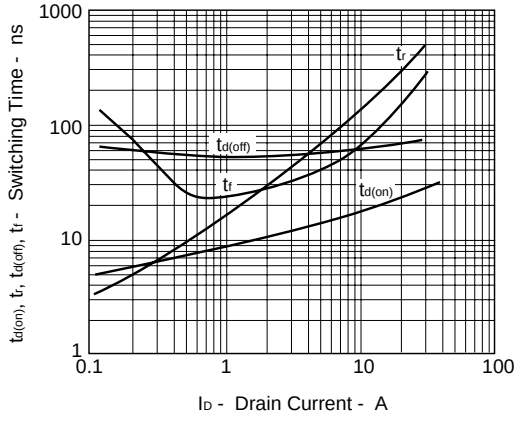

REVERSE RECOVERY TIME vs. DRAIN CURRENT

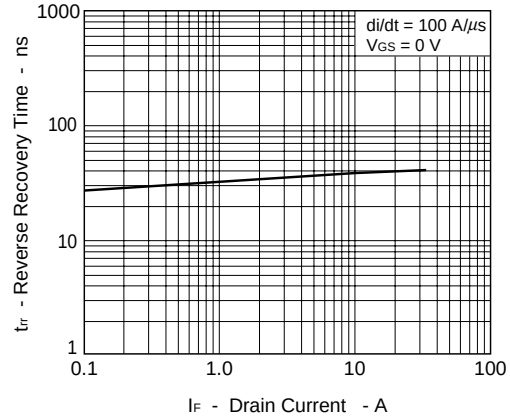

DYNAMIC INPUT/OUTPUT CHARACTERISTICS

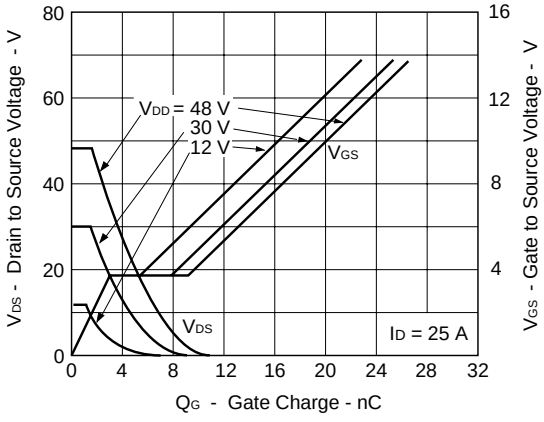

★ SINGLE AVALANCHE CURRENT vs. INDUCTIVE LOAD

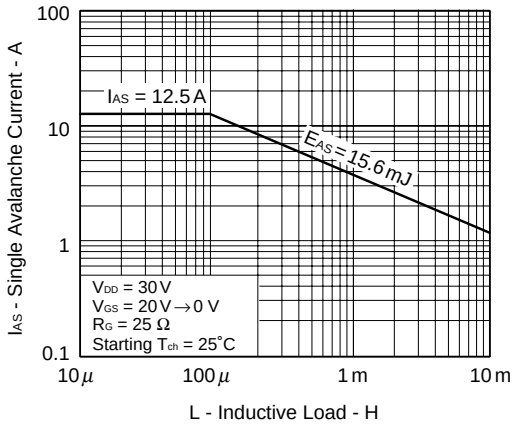

SINGLE AVALANCHE ENERGY DERATING FACTOR

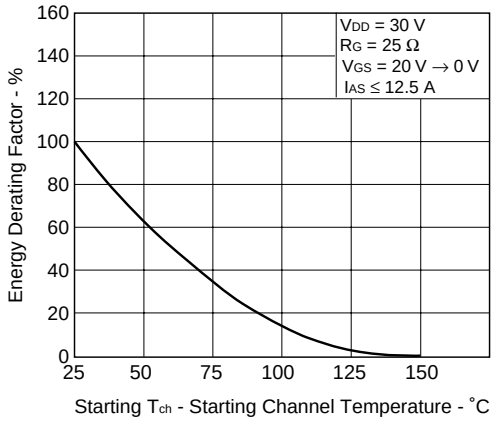

PACKAGE DRAWING

Isolated TO-220 (MP-45F)

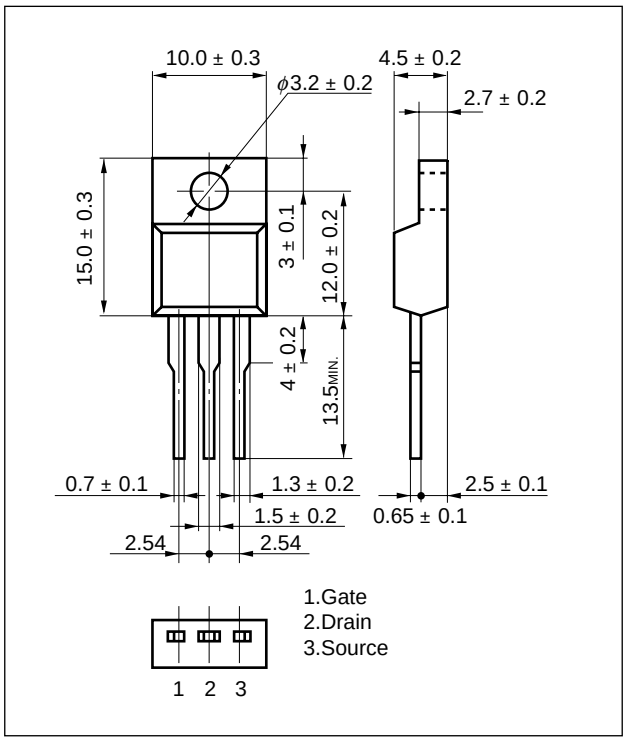

EQUIVALENT CIRCUIT

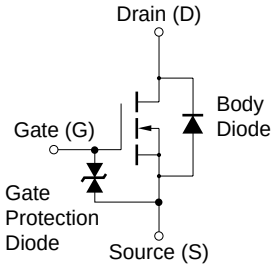

Remark 1. This product is designed for consumer application and isn't suitable for automotive application.

2. The diode connected between the gate and source of the transistor serves as a protector against ESD. When this device actually used, an additional protection circuit is externally required if a voltage exceeding the rated voltage may be applied to this device.

- **The information in this document is current as of May, 2001. The information is subject to change without notice. For actual design-in, refer to the latest publications of NEC's data sheets or data books, etc., for the most up-to-date specifications of NEC semiconductor products. Not all products and/or types are available in every country. Please check with an NEC sales representative for availability and additional information.**
- No part of this document may be copied or reproduced in any form or by any means without prior written consent of NEC. NEC assumes no responsibility for any errors that may appear in this document.
- NEC does not assume any liability for infringement of patents, copyrights or other intellectual property rights of third parties by or arising from the use of NEC semiconductor products listed in this document or any other liability arising from the use of such products. No license, express, implied or otherwise, is granted under any patents, copyrights or other intellectual property rights of NEC or others.
- Descriptions of circuits, software and other related information in this document are provided for illustrative purposes in semiconductor product operation and application examples. The incorporation of these circuits, software and information in the design of customer's equipment shall be done under the full responsibility of customer. NEC assumes no responsibility for any losses incurred by customers or third parties arising from the use of these circuits, software and information.
- While NEC endeavours to enhance the quality, reliability and safety of NEC semiconductor products, customers agree and acknowledge that the possibility of defects thereof cannot be eliminated entirely. To minimize risks of damage to property or injury (including death) to persons arising from defects in NEC semiconductor products, customers must incorporate sufficient safety measures in their design, such as redundancy, fire-containment, and anti-failure features.
- NEC semiconductor products are classified into the following three quality grades:
  "Standard", "Special" and "Specific". The "Specific" quality grade applies only to semiconductor products developed based on a customer-designated "quality assurance program" for a specific application. The recommended applications of a semiconductor product depend on its quality grade, as indicated below. Customers must check the quality grade of each semiconductor product before using it in a particular application.

  "Standard": Computers, office equipment, communications equipment, test and measurement equipment, audio and visual equipment, home electronic appliances, machine tools, personal electronic equipment and industrial robots

  "Special": Transportation equipment (automobiles, trains, ships, etc.), traffic control systems, anti-disaster systems, anti-crime systems, safety equipment and medical equipment (not specifically designed for life support)

  "Specific": Aircraft, aerospace equipment, submersible repeaters, nuclear reactor control systems, life support systems and medical equipment for life support, etc.

  The quality grade of NEC semiconductor products is "Standard" unless otherwise expressly specified in NEC's data sheets or data books, etc. If customers wish to use NEC semiconductor products in applications not intended by NEC, they must contact an NEC sales representative in advance to determine NEC's willingness to support a given application.

  (Note)

  (1) "NEC" as used in this statement means NEC Corporation and also includes its majority-owned subsidiaries.

  (2) "NEC semiconductor products" means any semiconductor product developed or manufactured by or for NEC (as defined above).

M8E 00. 4

This datasheet has been download from:

www.datasheetcatalog.com

Datasheets for electronics components.

ENTEGRECİ

Bu belge www.entegreci.com üzerinden sunulmaktadır.

Elektronik komponent tedarikinde Entegreci

Entegreci, Eskişehir merkezli, Türkiye geneline satış yapan bir elektronik komponent mağazasıdır. Entegreler (IC), mikrodenetleyiciler, transistörler, diyotlar, pasif elemanlar, konnektörler, modüller ve geliştirme kartları tek adetten seri üretim adetlerine kadar satılır. Ürün sayfalarında güncel stok durumunu, fiyatı ve datasheet bağlantısını bulabilirsiniz.

Parça koduyla arama

Üretici parça numarasını yazın; stok ve fiyatı hemen görün.

www.entegreci.com

Ürün kategorileri

Entegreden kapasitöre tüm elektronik komponent kategorileri.

Kategorilere göz atın

Üreticiler

Aradığınız üreticinin ürünlerini tek sayfada inceleyin.

Üreticileri görün

Toplu alım ve teklif

Listede olmayan ya da yüksek adetli parçalar için teklif isteyin.

Teklif isteyin

www.entegreci.com | **destek@entegreci.com** | **0850 305 90 34**

Entegreci is an online electronic components store based in Türkiye. Search by manufacturer part number to see stock, prices and datasheets for integrated circuits, microcontrollers, transistors, passive components and connectors, or request a quote for parts that are not listed.

Bu sayfa Entegreci tarafından eklenmiştir. Belgenin önceki sayfaları asıl yayıncısına aittir ve içeriği değiştirilmemiştir; en güncel sürüm için belgenin yayıncısına başvurun.