MOTOROLA

SG3526

Pulse Width Modulation Control Circuit

The SG3526 is a high performance pulse width modulator integrated circuit intended for fixed frequency switching regulators and other power control applications.

Functions included in this IC are a temperature compensated voltage reference, sawtooth oscillator, error amplifier, pulse width modulator, pulse metering and steering logic, and two high current totem pole outputs ideally suited for driving the capacitance of power FETs at high speeds.

Additional protective features include soft start and undervoltage lockout, digital current limiting, double pulse inhibit, adjustable dead time and a data latch for single pulse metering. All digital control ports are TTL and B–series CMOS compatible. Active low logic design allows easy wired–OR connections for maximum flexibility. The versatility of this device enables implementation in single–ended or push–pull switching regulators that are transformerless or transformer coupled. The SG3526 is specified over a junction temperature range of 0° to +125°C.

- 8.0 V to 35 V Operation
- 5.0 V ±1% Trimmed Reference
- 1.0 Hz to 400 kHz Oscillator Range
- Dual Source/Sink Current Outputs: ±100 mA
- Digital Current Limiting
- Programmable Dead Time
- Undervoltage Lockout
- Single Pulse Metering
- Programmable Soft–Start
- Wide Current Limit Common Mode Range
- Guaranteed 6 Unit Synchronization

Representative Block Diagram

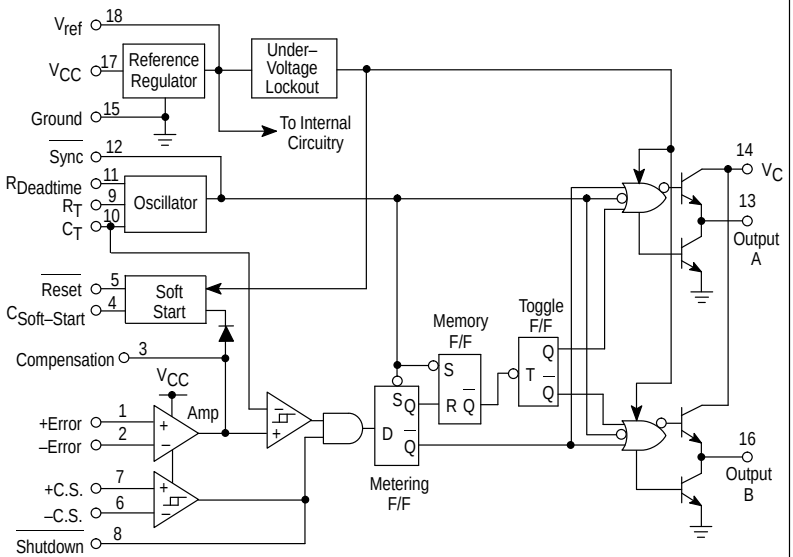

PULSE WIDTH MODULATION CONTROL CIRCUIT

SEMICONDUCTOR TECHNICAL DATA

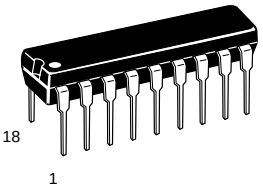

N SUFFIX
PLASTIC PACKAGE
CASE 707

PIN CONNECTIONS

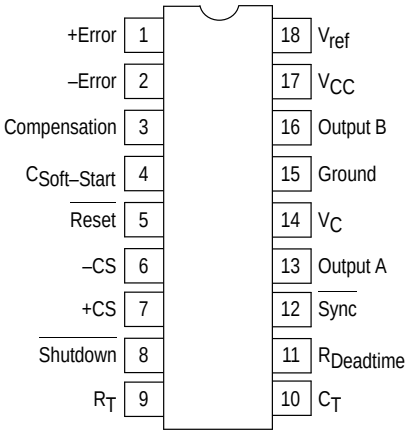

(Top View)

ORDERING INFORMATION

Device	Operating Temperature Range	Package
SG3526N	T_J = 0° to +125°C	Plastic DIP

© Motorola, Inc. 1996

MAXIMUM RATINGS (Note 1)

Rating	Symbol	Value	Unit
Supply Voltage	V_{CC}	+40	Vdc
Collector Supply Voltage	V_C	+40	Vdc
Logic Inputs		–0.3 to +5.5	V
Analog Inputs		–0.3 to V_{CC}	V
Output Current, Source or Sink	I_O	±200	mA
Reference Load Current (V_{CC} = 40 V, Note 2)	I_{ref}	50	mA
Logic Sink Current		15	mA
Power Dissipation T_A = +25°C (Note 3) T_C = +25°C (Note 4)	P_D	 1000 3000	mW
Thermal Resistance Junction–to–Air	$R_{\theta JA}$	100	°C/W
Thermal Resistance Junction–to–Case	$R_{\theta JC}$	42	°C/W
Operating Junction Temperature	T_J	+150	°C
Storage Temperature Range	T_{stg}	–65 to +150	°C
Lead Temperature (Soldering, 10 Seconds)	T_{Solder}	±300	°C

NOTES: 1. Values beyond which damage may occur.
2. Maximum junction temperature must be observed.
3. Derate at 10 mW/°C for ambient temperatures above +50°C.
4. Derate at 24 mW/°C for case temperatures above +25°C.

RECOMMENDED OPERATING CONDITIONS

Characteristics	Symbol	Min	Max	Unit
Supply Voltage	V_{CC}	8.0	35	Vdc
Collector Supply Voltage	V_C	4.5	35	Vdc
Output Sink/Source Current (Each Output)	I_O	0	±100	mA
Reference Load Current	I_{ref}	0	20	mA
Oscillator Frequency Range	f_{osc}	0.001	400	kHz
Oscillator Timing Resistor	R_T	2.0	150	kΩ
Oscillator Timing Capacitor	C_T	0.001	20	μF
Available Deadtime Range (40 kHz)	–	3.0	50	%
Operating Junction Temperature Range	T_J	0	+125	°C

ELECTRICAL CHARACTERISTICS (V_{CC} = +15 Vdc, $T_J = T_{low}$ to T_{high} [Note 5], unless otherwise noted.)

Characteristics	Symbol	Min	Typ	Max	Unit
REFERENCE SECTION (Note 6)					
Reference Output Voltage (T_J = +25°C)	V_{ref}	4.90	5.00	5.10	V
Line Regulation (+8.0 V ≤ V_{CC} ≤ +35 V)	Reg_{line}	–	10	30	mV
Load Regulation (0 mA ≤ I_L ≤ 20 mA)	Reg_{load}	–	10	50	mV
Temperature Stability	$\Delta V_{ref}/\Delta T$	–	10	–	mV
Total Reference Output Voltage Variation (+8.0 V ≤ V_{CC} ≤ +35 V, 0 mA ≤ I_L ≤ 20 mA)	ΔV_{ref}	4.85	5.00	5.15	V
Short Circuit Current (V_{ref} = 0 V) (Note 2)	I_{SC}	25	80	125	mA
UNDERVOLTAGE LOCKOUT					
$\overline{\text{Reset}}$ Output Voltage (V_{ref} = +3.8 V)		–	0.2	0.4	V
$\overline{\text{Reset}}$ Output Voltage (V_{ref} = +4.8 V)		2.4	4.8	–	V
OSCILLATOR SECTION (Note 7)					
Initial Accuracy (T_J = +25°C)		–	±3.0	±8.0	%
Frequency Stability over Power Supply Range (+8.0 V ≤ V_{CC} ≤ +35 V)	$\frac{\Delta f_{osc}}{\Delta V_{CC}}$	–	0.5	1.0	%
Frequency Stability over Temperature ($\Delta T_J = T_{low}$ to T_{high})	$\frac{\Delta f_{osc}}{\Delta T_J}$	–	2.0	–	%
Minimum Frequency (R_T = 150 kΩ, C_T = 20 μF)	f_{min}	–	0.5	–	Hz
Maximum Frequency (R_T = 2.0 kΩ, C_T = 0.001 μF)	f_{max}	400	–	–	kHz
Sawtooth Peak Voltage (V_{CC} = +35 V)	$V_{osc}(P)$	–	3.0	3.5	V
Sawtooth Valley Voltage (V_{CC} = +8.0 V)	$V_{osc}(V)$	0.45	0.8	–	V
ERROR AMPLIFIER SECTION (Note 8)					
Input Offset Voltage (R_S ≤ 2.0 kΩ)	V_{IO}	–	2.0	10	mV
Input Bias Current	I_{IB}	–	–350	–2000	nA
Input Offset Current	I_{IO}	–	35	200	nA
DC Open Loop Gain (R_L ≥ 10 MΩ)	A_{VOL}	60	72	–	dB
High Output Voltage ($V_{Pin\ 1}$–$V_{Pin\ 2}$ ≥ +150 mV, I_{source} = 100 μA)	V_{OH}	3.6	4.2	–	V
Low Output Voltage ($V_{Pin\ 2}$–$V_{Pin\ 1}$ ≥ +150 mV, I_{sink} = 100 μA)	V_{OL}	–	0.2	0.4	V
Common Mode Rejection Ratio (R_S ≤ 2.0 kΩ)	CMRR	70	94	–	dB
Power Supply Rejection Ratio (+12 V ≤ V_{CC} ≤ +18 V)	PSRR	66	80	–	dB

NOTES: 2. Maximum junction temperature must be observed.
5. T_{low} = 0°C T_{high} = +125°C
6. I_L = 0 mA unless otherwise noted.
7. f_{osc} = 40 kHz (R_T = 4.12 kΩ ± 1%, C_T = 0.01 μF ± 1%, R_D = 0 Ω)
8. 0 V ≤ V_{CM} ≤ +5.2 V.

ELECTRICAL CHARACTERISTICS (continued)

Characteristics	Symbol	Min	Typ	Max	Unit
PWM COMPARATOR SECTION (Note 7)					
Minimum Duty Cycle ($V_{Compensation}$ = +0.4 V)	DC_{min}	–	–	0	%
Maximum Duty Cycle ($V_{Compensation}$ = +3.6 V)	DC_{max}	45	49	–	%
DIGITAL PORTS (SYNC, SHUTDOWN, RESET)					
Output Voltage					V
(High Logic Level) (I_{source} = 40 μA)	V_{OH}	2.4	4.0	–	
(Low Logic Level) (I_{sink} = 3.6 mA)	V_{OL}	–	0.2	0.4	
Input Current — High Logic Level					μA
(High Logic Level) (V_{IH} = +2.4 V)	I_{IH}	–	–125	–200	
(Low Logic Level) (V_{IL} = +0.4 V)	I_{IL}	–	–225	–360	
CURRENT LIMIT COMPARATOR SECTION (Note 9)					
Sense Voltage ($R_S \leq 50\ \Omega$)	V_{sense}	80	100	120	mA
Input Bias Current	I_{IB}	—	–3.0	–10	μA
SOFT–START SECTION					
Error Clamp Voltage ($\overline{Reset}$ = +0.4 V)		–	0.1	0.4	V
$C_{Soft–Start}$ Charging Current ($\overline{Reset}$ = +2.4 V)	I_{CS}	50	100	150	μA
OUTPUT DRIVERS (Each Output, V_C = +15 Vdc, unless otherwise noted.)					
Output High Level	V_{OH}				V
I_{source} = 20 mA		12.5	13.5	–	
I_{source} = 100 mA		12	13	–	
Output Low Level	V_{OL}				V
I_{sink} = 20 mA		–	0.2	0.3	
I_{sink} = 100 mA		–	1.2	2.0	
Collector Leakage, V_C = +40 V	$I_{C(leak)}$	–	50	150	μA
Rise Time (C_L = 1000 pF)	t_r	–	0.3	0.6	μs
Fall Time (C_L = 1000 pF)	t_f	–	0.1	0.2	μs
Supply Current (Shutdown = +0.4 V, V_{CC} = +35 V, R_T = 4.12 kΩ)	I_{CC}	–	18	30	mA

NOTES: 7. f_{osc} = 40 kHz (R_T = 4.12 kΩ ± 1%, C_T = 0.01 μF ± 1%, R_D = 0 Ω)
8. 0 V ≤ V_{CM} ≤ +5.2 V
9. 0 V ≤ V_{CM} ≤ +12 V

Figure 1. Reference Stability over Temperature

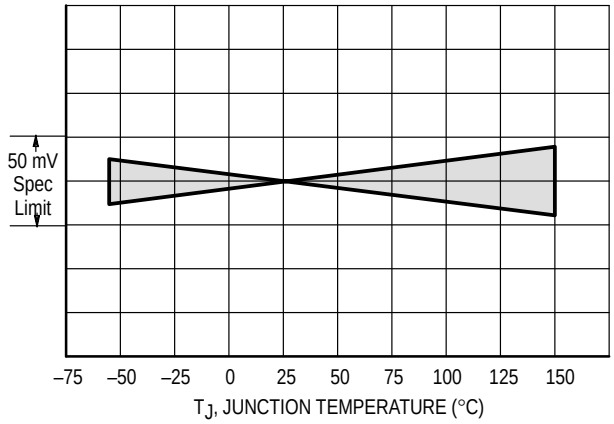

Figure 2. Reference Voltage as a Function Supply Voltage

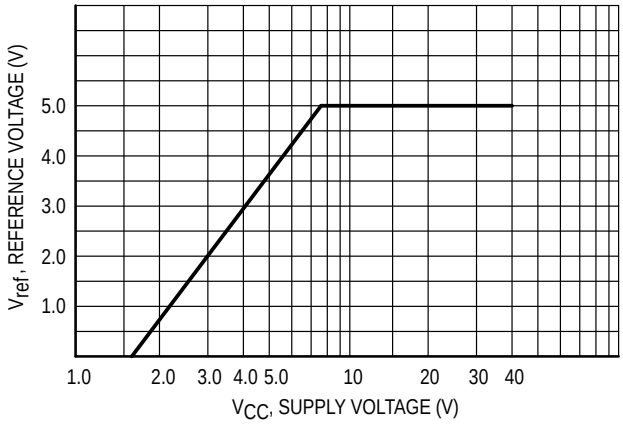

Figure 3. Error Amplifier Open Loop Frequency Response

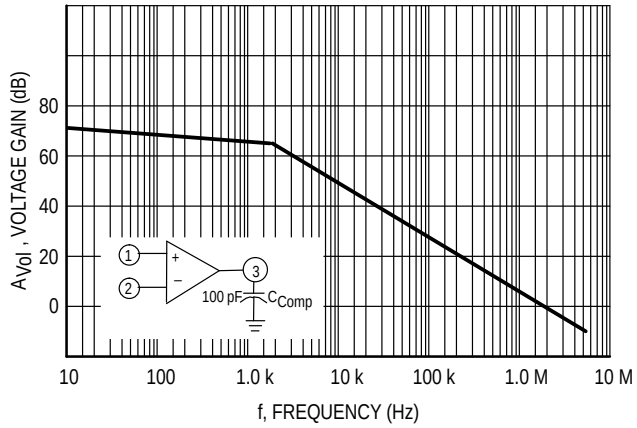

Figure 4. Current Limit Comparator Threshold

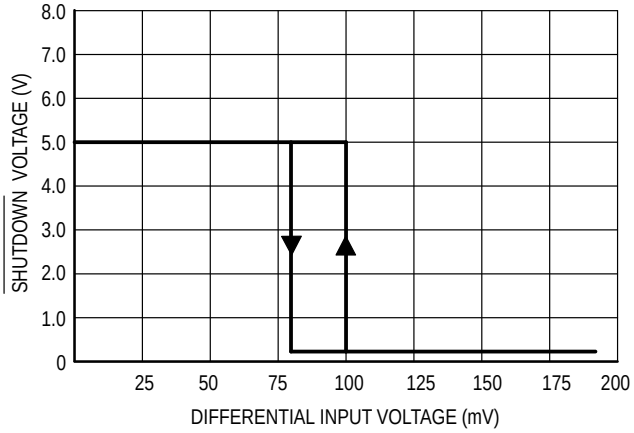

Figure 5. Undervoltage Lockout Characteristic

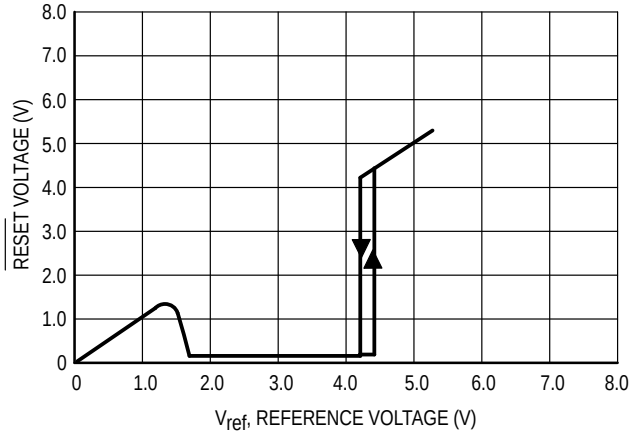

Figure 6. Output Driver Saturation Voltage as a Function of Sink Current

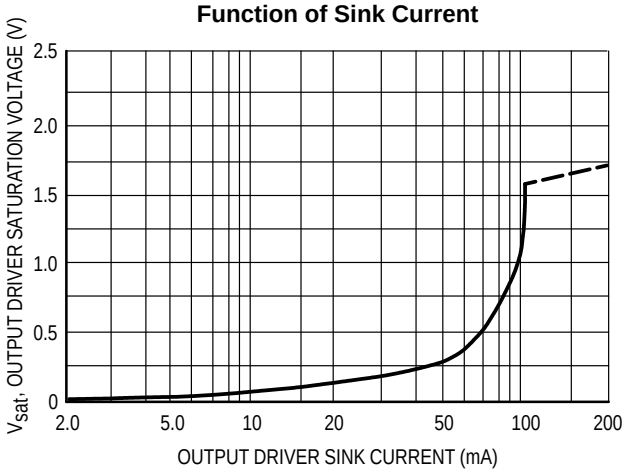

Figure 7. V_C Saturation Voltage as a Function of Sink Current

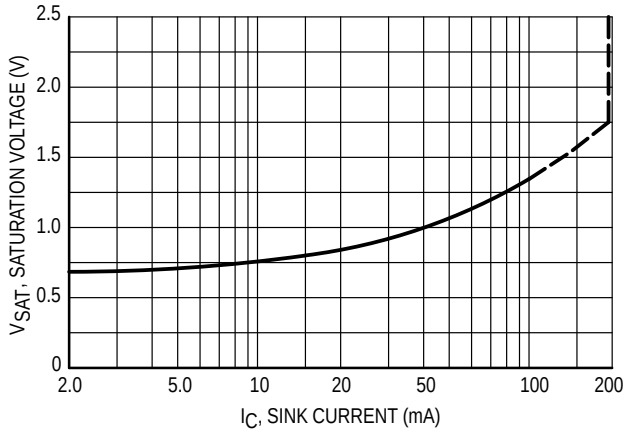

Figure 8. Oscillator Period

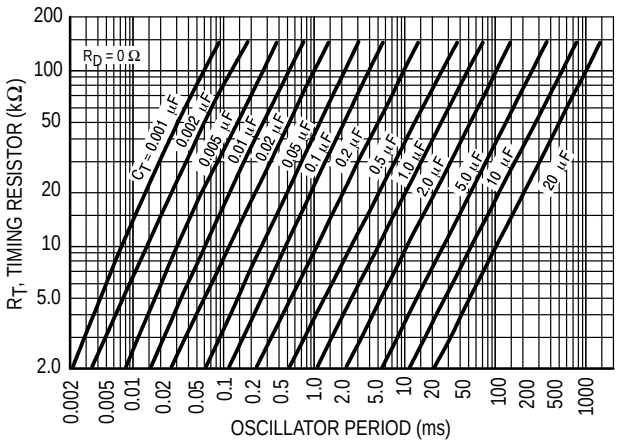

Figure 9. Error Amplifier

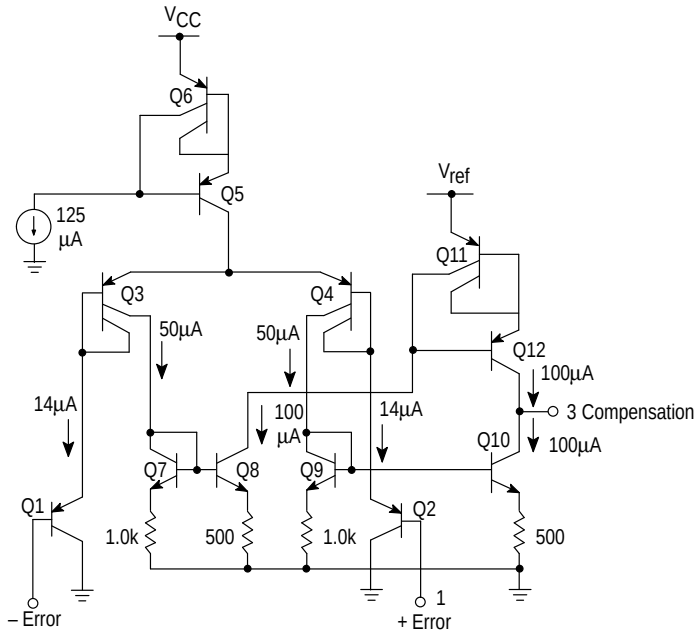

Figure 10. Undervoltage Lockout

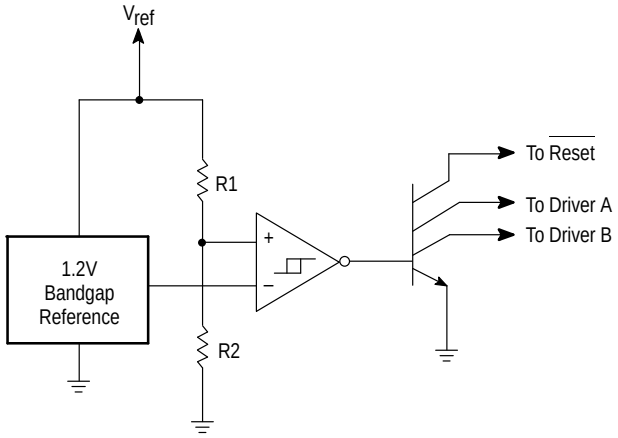

Figure 11. Pulse Processing Logic

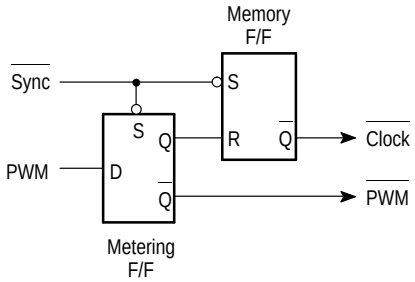

The metering Flip–Flop is an asynchronous data latch which suppresses high frequency oscillations by allowing only one PWM pulse per oscillator cycle.

The memory Flip–Flop prevents double pulsing in a push–pull configuration by remembering which output produced the last pulse.

APPLICATIONS INFORMATION

Figure 12. Extending Reference Output Current Capability

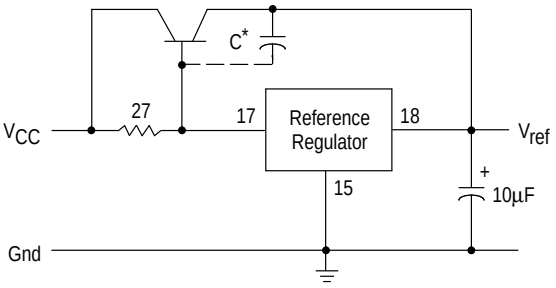

* May be required with some types of transistors

Figure 13. Error Amplifier Connections

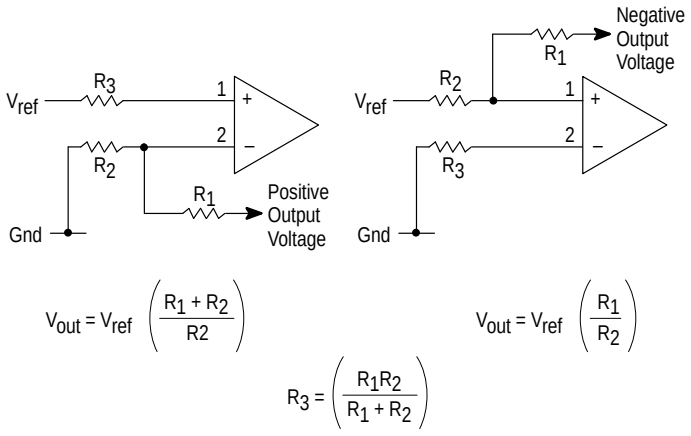

Figure 14. Oscillator Connections

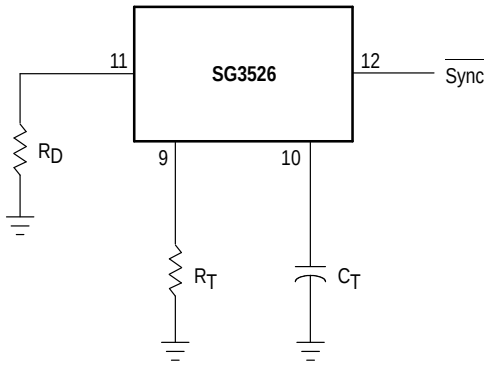

Figure 15. Foldback Current Limiting

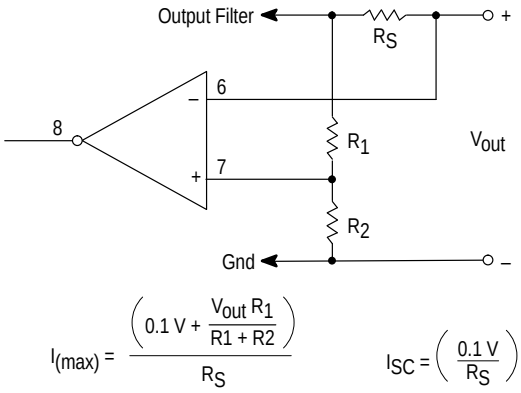

Figure 16. Soft–Start Circuity

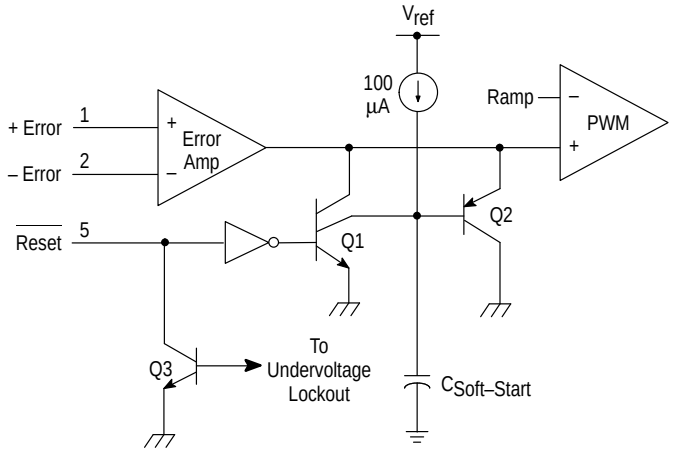

Figure 17. Driving VMOS Power FETs

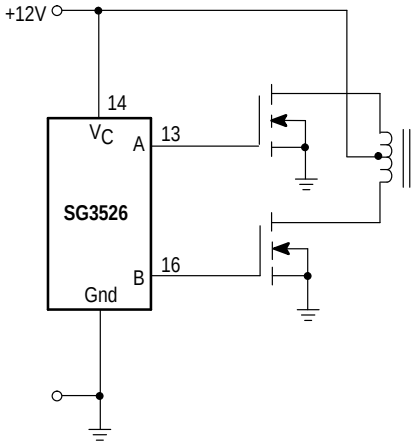

The totem pole output drivers of the SG3526 are ideally suited for driving the input capacitance of power FETs at high speeds.

Figure 18. Half–Bridge Configuration

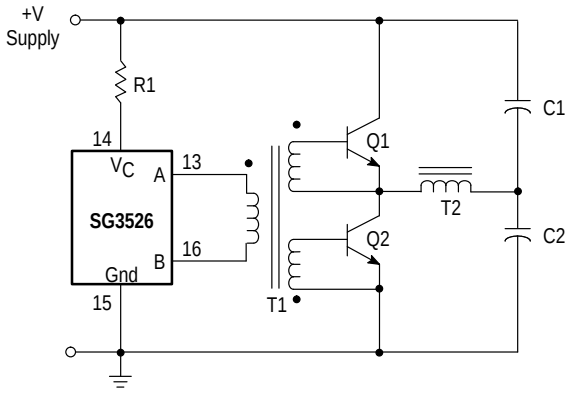

Figure 19. Flyback Converter with Current Limiting

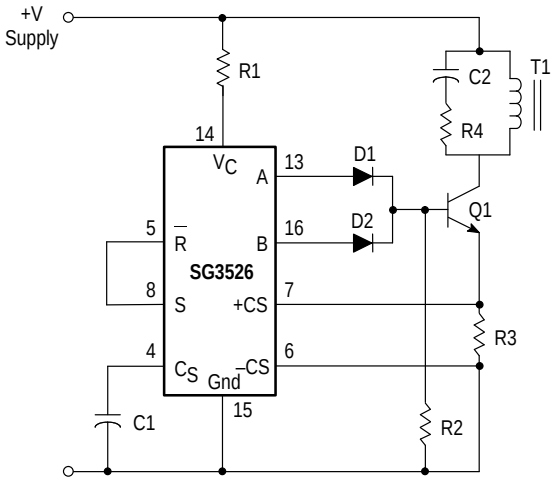

In the above circuit, current limiting is accomplished by using the current limit comparator output to reset the soft–start capacitor.

Figure 20. Single–Ended Configuration

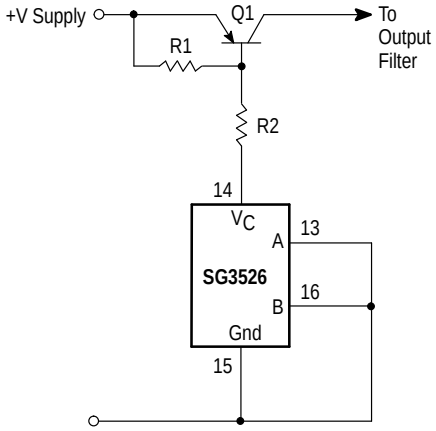

Figure 21. Push–Pull Configuration

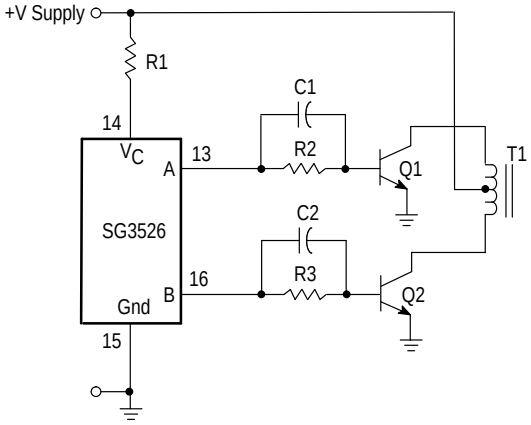

OUTLINE DIMENSIONS

N SUFFIX
PLASTIC PACKAGE
CASE 707–02
ISSUE C

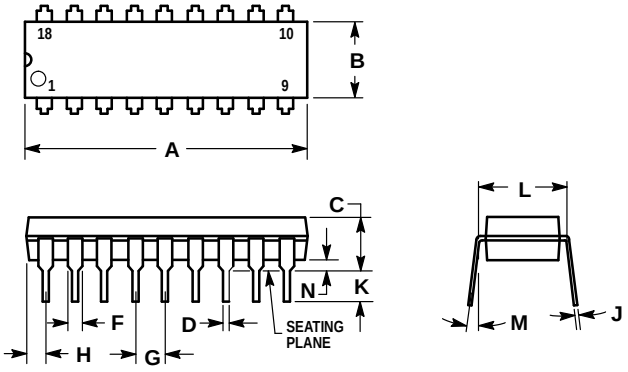

NOTES:
1. POSITIONAL TOLERANCE OF LEADS (D), SHALL BE WITHIN 0.25 (0.010) AT MAXIMUM MATERIAL CONDITION, IN RELATION TO SEATING PLANE AND EACH OTHER.
2. DIMENSION L TO CENTER OF LEADS WHEN FORMED PARALLEL.
3. DIMENSION B DOES NOT INCLUDE MOLD FLASH.

	MILLIMETERS		INCHES	
DIM	MIN	MAX	MIN	MAX
A	22.22	23.24	0.875	0.915
B	6.10	6.60	0.240	0.260
C	3.56	4.57	0.140	0.180
D	0.36	0.56	0.014	0.022
F	1.27	1.78	0.050	0.070
G	2.54 BSC		0.100 BSC	
H	1.02	1.52	0.040	0.060
J	0.20	0.30	0.008	0.012
K	2.92	3.43	0.115	0.135
L	7.62 BSC		0.300 BSC	
M	0 °	15°	0 °	15 °
N	0.51	1.02	0.020	0.040

Motorola reserves the right to make changes without further notice to any products herein. Motorola makes no warranty, representation or guarantee regarding the suitability of its products for any particular purpose, nor does Motorola assume any liability arising out of the application or use of any product or circuit, and specifically disclaims any and all liability, including without limitation consequential or incidental damages. “Typical” parameters which may be provided in Motorola data sheets and/or specifications can and do vary in different applications and actual performance may vary over time. All operating parameters, including “Typicals” must be validated for each customer application by customer’s technical experts. Motorola does not convey any license under its patent rights nor the rights of others. Motorola products are not designed, intended, or authorized for use as components in systems intended for surgical implant into the body, or other applications intended to support or sustain life, or for any other application in which the failure of the Motorola product could create a situation where personal injury or death may occur. Should Buyer purchase or use Motorola products for any such unintended or unauthorized application, Buyer shall indemnify and hold Motorola and its officers, employees, subsidiaries, affiliates, and distributors harmless against all claims, costs, damages, and expenses, and reasonable attorney fees arising out of, directly or indirectly, any claim of personal injury or death associated with such unintended or unauthorized use, even if such claim alleges that Motorola was negligent regarding the design or manufacture of the part. Motorola and Ⓜ are registered trademarks of Motorola, Inc. Motorola, Inc. is an Equal Opportunity/Affirmative Action Employer.

How to reach us:

USA / EUROPE / Locations Not Listed: Motorola Literature Distribution; P.O. Box 20912; Phoenix, Arizona 85036. 1–800–441–2447 or 602–303–5454

MFAX: RMFAX0@email.sps.mot.com – TOUCHTONE 602–244–6609
INTERNET: http://Design–NET.com

JAPAN: Nippon Motorola Ltd.; Tatsumi–SPD–JLDC, 6F Seibu–Butsuryu–Center, 3–14–2 Tatsumi Koto–Ku, Tokyo 135, Japan. 03–81–3521–8315

ASIA / PACIFIC: Motorola Semiconductors H.K. Ltd.; 8B Tai Ping Industrial Park, 51 Ting Kok Road, Tai Po, N.T., Hong Kong. 852–26629298

This datasheet has been download from:

www.datasheetcatalog.com

Datasheets for electronics components.

ENTEGRECİ

Bu belge www.entegreci.com üzerinden sunulmaktadır.

Elektronik komponent tedarikinde Entegreci

Entegreci, Eskişehir merkezli, Türkiye geneline satış yapan bir elektronik komponent mağazasıdır. Entegreler (IC), mikrodenetleyiciler, transistörler, diyotlar, pasif elemanlar, konnektörler, modüller ve geliştirme kartları tek adetten seri üretim adetlerine kadar satılır. Ürün sayfalarında güncel stok durumunu, fiyatı ve datasheet bağlantısını bulabilirsiniz.

Parça koduyla arama

Üretici parça numarasını yazın; stok ve fiyatı hemen görün.

www.entegreci.com

Ürün kategorileri

Entegreden kapasitöre tüm elektronik komponent kategorileri.

Kategorilere göz atın

Üreticiler

Aradığınız üreticinin ürünlerini tek sayfada inceleyin.

Üreticileri görün

Toplu alım ve teklif

Listede olmayan ya da yüksek adetli parçalar için teklif isteyin.

Teklif isteyin

www.entegreci.com | **destek@entegreci.com** | **0850 305 90 34**

Entegreci is an online electronic components store based in Türkiye. Search by manufacturer part number to see stock, prices and datasheets for integrated circuits, microcontrollers, transistors, passive components and connectors, or request a quote for parts that are not listed.

Bu sayfa Entegreci tarafından eklenmiştir. Belgenin önceki sayfaları asıl yayıncısına aittir ve içeriği değiştirilmemiştir; en güncel sürüm için belgenin yayıncısına başvurun.