M74HC251

8-CHANNEL MULTIPLEXER (3-STATE)

- HIGH SPEED :
  t_{PD} = 17 ns (TYP.) at V_{CC} = 6V
- LOW POWER DISSIPATION:
  I_{CC} =4μA(MAX.) at T_A=25°C
- HIGH NOISE IMMUNITY:
  $V_{NIH} = V_{NIL}$ = 28 % V_{CC} (MIN.)
- SYMMETRICAL OUTPUT IMPEDANCE:
  $|I_{OH}| = I_{OL}$ = 4mA (MIN)
- BALANCED PROPAGATION DELAYS:
  $t_{PLH} \cong t_{PHL}$
- WIDE OPERATING VOLTAGE RANGE:
  V_{CC} (OPR) = 2V to 6V
- PIN AND FUNCTION COMPATIBLE WITH 74 SERIES 251

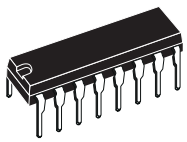

DIP

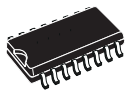

SOP



TSSOP

ORDER CODES

PACKAGE	TUBE	T & R
DIP	M74HC251B1R	
SOP	M74HC251M1R	M74HC251RM13TR
TSSOP		M74HC251TTR

DESCRIPTION

The M74HC251 is an high speed CMOS 8-CHANNEL MULTIPLEXER (3-STATE) fabricated with silicon gate C^2MOS technology.
This Multiplexer features both true (Y) and complement (W) outputs as well as STROBE input. When the STROBE is high, both outputs are in the high impedance state. When enabled, address information on the data select inputs determines which data input is routed to Y and W. All inputs are equipped with protection circuits against static discharge and transient excess voltage.

PIN CONNECTION AND IEC LOGIC SYMBOLS

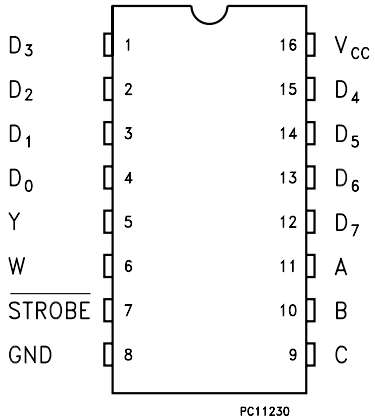

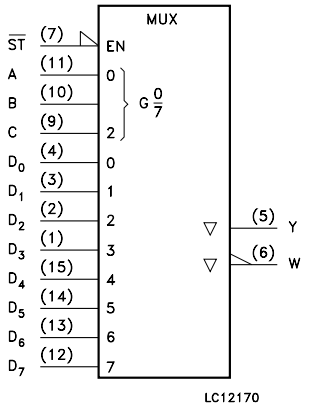

INPUT AND OUTPUT EQUIVALENT CIRCUIT

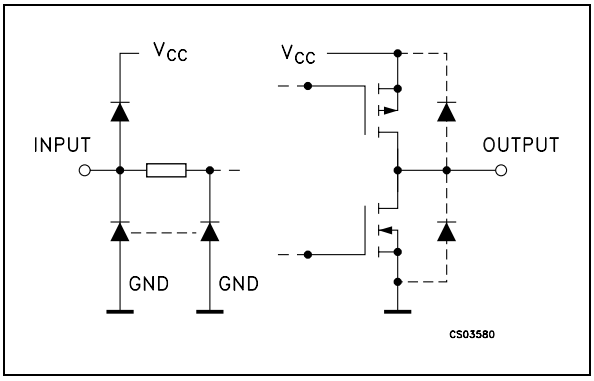

PIN DESCRIPTION

PIN No	SYMBOL	NAME AND FUNCTION
4, 3, 2, 1, 15, 14, 13, 12	D0 to D7	Multiplexer Inputs
5	Y	Multiplexer Output
6	W	Complementary Multiplexer Output
7	$\overline{\text{STROBE}}$	3 State Output Enable Input
11, 10, 9	A, B, C	Select Inputs
8	GND	Ground (0V)
16	Vcc	Positive Supply Voltage

TRUTH TABLE

INPUTS				OUTPUTS	
			$\overline{\text{STROBE}}$	Y	W
C	B	A	$\overline{\text{S}}$		
X	X	X	H	Z	Z
L	L	L	L	D0	$\overline{\text{D0}}$
L	L	H	L	D1	$\overline{\text{D1}}$
L	H	L	L	D2	$\overline{\text{D2}}$
L	H	H	L	D3	$\overline{\text{D3}}$
H	L	L	L	D4	$\overline{\text{D4}}$
H	L	H	L	D5	$\overline{\text{D5}}$
H	H	L	L	D6	$\overline{\text{D6}}$
H	H	H	L	D7	$\overline{\text{D7}}$

X : Don't Care
Z : High Impedance

LOGIC DIAGRAM

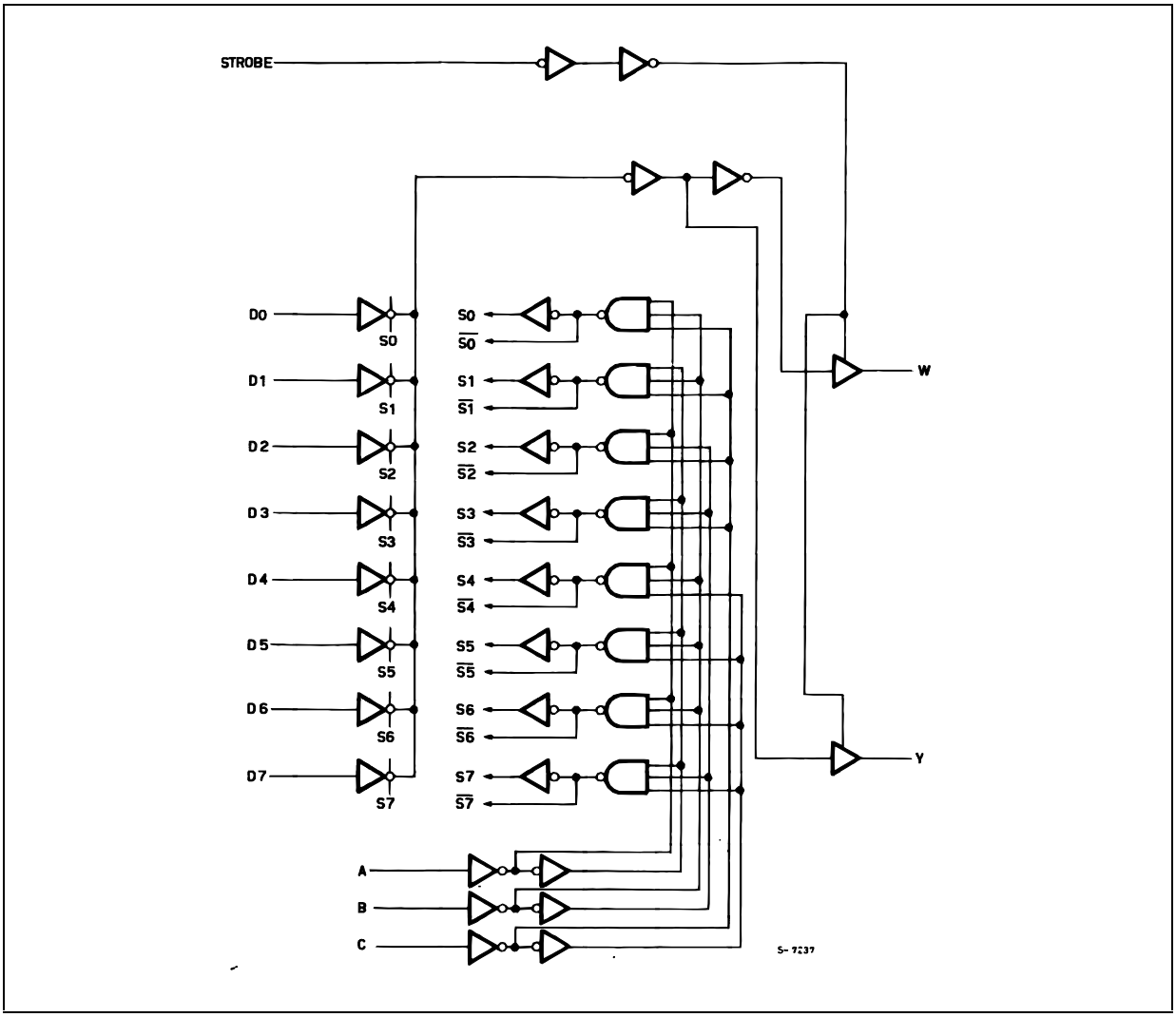

This logic diagram has not be used to estimate propagation delays

ABSOLUTE MAXIMUM RATINGS

Symbol	Parameter	Value	Unit
V_{CC}	Supply Voltage	-0.5 to +7	V
V_I	DC Input Voltage	-0.5 to V_{CC} + 0.5	V
V_O	DC Output Voltage	-0.5 to V_{CC} + 0.5	V
I_{IK}	DC Input Diode Current	± 20	mA
I_{OK}	DC Output Diode Current	± 20	mA
I_O	DC Output Current	± 25	mA
I_{CC} or I_{GND}	DC V_{CC} or Ground Current	± 50	mA
P_D	Power Dissipation	500(*)	mW
T_{stg}	Storage Temperature	-65 to +150	°C
T_L	Lead Temperature (10 sec)	300	°C

Absolute Maximum Ratings are those values beyond which damage to the device may occur. Functional operation under these conditions is not implied
(*) 500mW at 65 °C; derate to 300mW by 10mW/°C from 65°C to 85°C

RECOMMENDED OPERATING CONDITIONS

Symbol	Parameter		Value	Unit
V_{CC}	Supply Voltage		2 to 6	V
V_I	Input Voltage		0 to V_{CC}	V
V_O	Output Voltage		0 to V_{CC}	V
T_{op}	Operating Temperature		-55 to 125	°C
t_r, t_f	Input Rise and Fall Time	V_{CC} = 2.0V	0 to 1000	ns
		V_{CC} = 4.5V	0 to 500	ns
		V_{CC} = 6.0V	0 to 400	ns

DC SPECIFICATIONS

Symbol	Parameter	Test Condition		Value							Unit
		V_{CC} (V)		T_A = 25°C			-40 to 85°C		-55 to 125°C		
				Min.	Typ.	Max.	Min.	Max.	Min.	Max.	
V_{IH}	High Level Input Voltage	2.0		1.5			1.5		1.5		V
		4.5		3.15			3.15		3.15		
		6.0		4.2			4.2		4.2		
V_{IL}	Low Level Input Voltage	2.0				0.5		0.5		0.5	V
		4.5				1.35		1.35		1.35	
		6.0				1.8		1.8		1.8	
V_{OH}	High Level Output Voltage	2.0	I_O=-20 µA	1.9	2.0		1.9		1.9		V
		4.5	I_O=-20 µA	4.4	4.5		4.4		4.4		
		6.0	I_O=-20 µA	5.9	6.0		5.9		5.9		
		4.5	I_O=-4.0 mA	4.18	4.31		4.13		4.10		
		6.0	I_O=-5.2 mA	5.68	5.8		5.63		5.60		
V_{OL}	Low Level Output Voltage	2.0	I_O=20 µA		0.0	0.1		0.1		0.1	V
		4.5	I_O=20 µA		0.0	0.1		0.1		0.1	
		6.0	I_O=20 µA		0.0	0.1		0.1		0.1	
		4.5	I_O=4.0 mA		0.17	0.26		0.33		0.40	
		6.0	I_O=5.2 mA		0.18	0.26		0.33		0.40	
I_I	Input Leakage Current	6.0	V_I = V_{CC} or GND			± 0.1		± 1		± 1	µA
I_{OZ}	High Impedance Output Leakage Current	6.0	V_I = V_{IH} or V_{IL} V_O = V_{CC} or GND			± 0.5		± 5		± 10	µA
I_{CC}	Quiescent Supply Current	6.0	V_I = V_{CC} or GND			4		40		80	µA

AC ELECTRICAL CHARACTERISTICS (C_L = 50 pF, Input $t_r = t_f$ = 6ns)

Symbol	Parameter	Test Condition		Value							Unit
		V_{CC} (V)		T_A = 25°C			-40 to 85°C		-55 to 125°C		
				Min.	Typ.	Max.	Min.	Max.	Min.	Max.	
t_{TLH} t_{THL}	Output Transition Time	2.0			30	75		95		115	ns
		4.5			8	15		19		23	
		6.0			7	13		16		20	
t_{PLH} t_{PHL}	Propagation Delay Time (D - Y, W)	2.0			64	130		165		195	ns
		4.5			16	26		33		39	
		6.0			14	22		28		33	
t_{PHL}	Propagation Delay Time (A, B, C -Y, W)	2.0			80	160		200		240	ns
		4.5			20	32		40		48	
		6.0			17	27		34		41	
t_{PZL} t_{PZH}	High Impedance Output Enable Time	2.0	R_L = 1 KΩ		36	90		115		135	ns
		4.5			11	18		23		27	
		6.0			9	15		20		23	
t_{PLZ} t_{PHZ}	High Impedance Output Disable Time	2.0	R_L = 1 KΩ		26	85		105		130	ns
		4.5			13	17		21		26	
		6.0			11	14		18		22	

CAPACITIVE CHARACTERISTICS

Symbol	Parameter	Test Condition		Value							Unit
		V_{CC} (V)		T_A = 25°C			-40 to 85°C		-55 to 125°C		
				Min.	Typ.	Max.	Min.	Max.	Min.	Max.	
C_{IN}	Input Capacitance	5.0			5	10		10		10	pF
C_{PD}	Power Dissipation Capacitance (note 1)	5.0			62						pF

1) C_{PD} is defined as the value of the IC's internal equivalent capacitance which is calculated from the operating current consumption without load. (Refer to Test Circuit). Average operating current can be obtained by the following equation. $I_{CC(opr)} = C_{PD} \times V_{CC} \times f_{IN} + I_{CC}$

TEST CIRCUIT

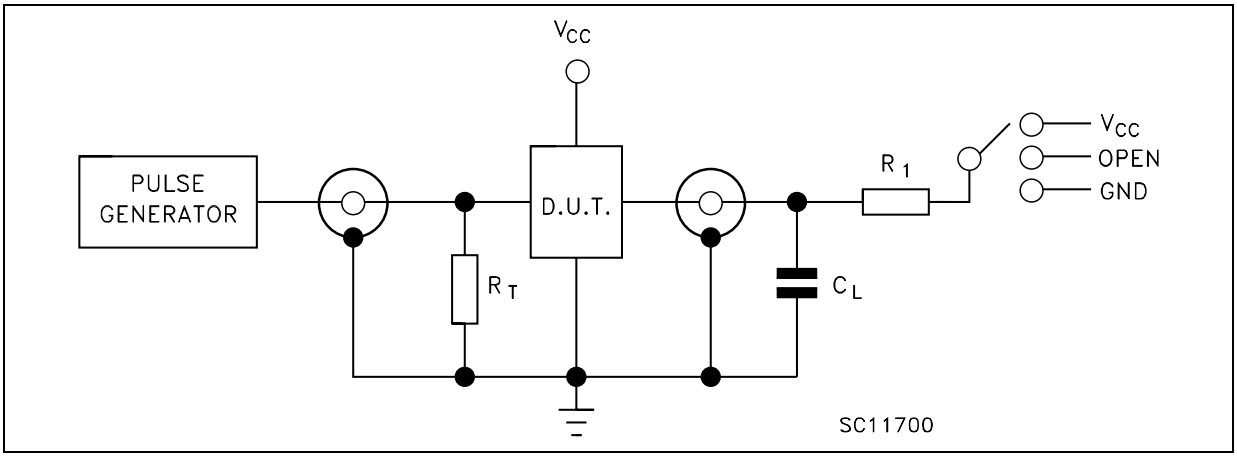

TEST	SWITCH
t_{PLH}, t_{PHL}	Open
t_{PZL}, t_{PLZ}	V_{CC}
t_{PZH}, t_{PHZ}	GND

C_L = 50pF/150pF or equivalent (includes jig and probe capacitance)
R_1 = 1KΩ or equivalent
R_T = Z_{OUT} of pulse generator (typically 50Ω)

WAVEFORM 1: PROPAGATION DELAY TIME (f=1MHz; 50% duty cycle)

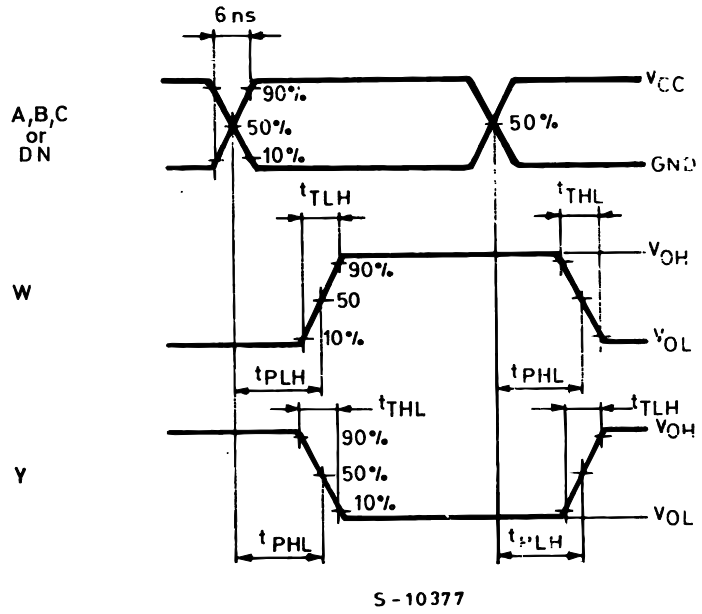

WAVEFORM 2 : OUTPUT ENABLE AND DISABLE TIME (f=1MHz; 50% duty cycle)

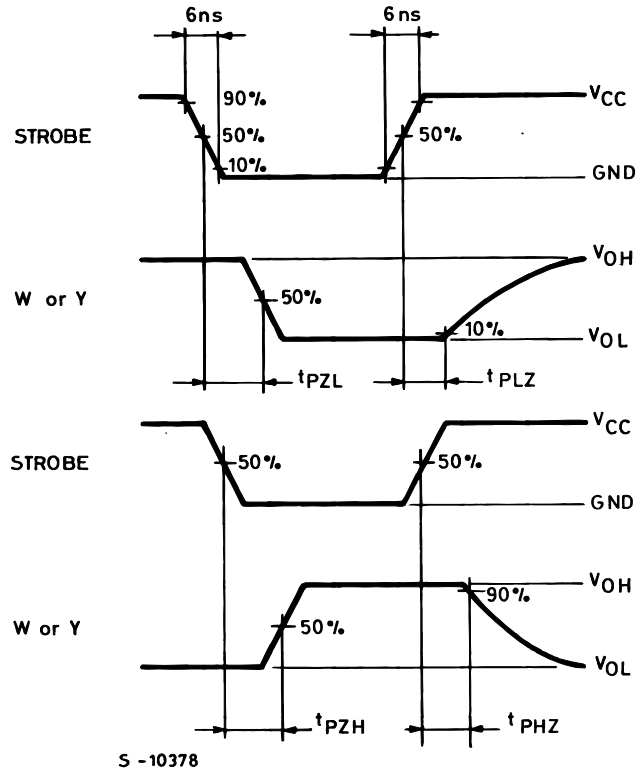

Plastic DIP-16 (0.25) MECHANICAL DATA

DIM.	mm.			inch		
	MIN.	TYP	MAX.	MIN.	TYP.	MAX.
a1	0.51			0.020		
B	0.77		1.65	0.030		0.065
b		0.5			0.020	
b1		0.25			0.010	
D			20			0.787
E		8.5			0.335	
e		2.54			0.100	
e3		17.78			0.700	
F			7.1			0.280
I			5.1			0.201
L		3.3			0.130	
Z			1.27			0.050

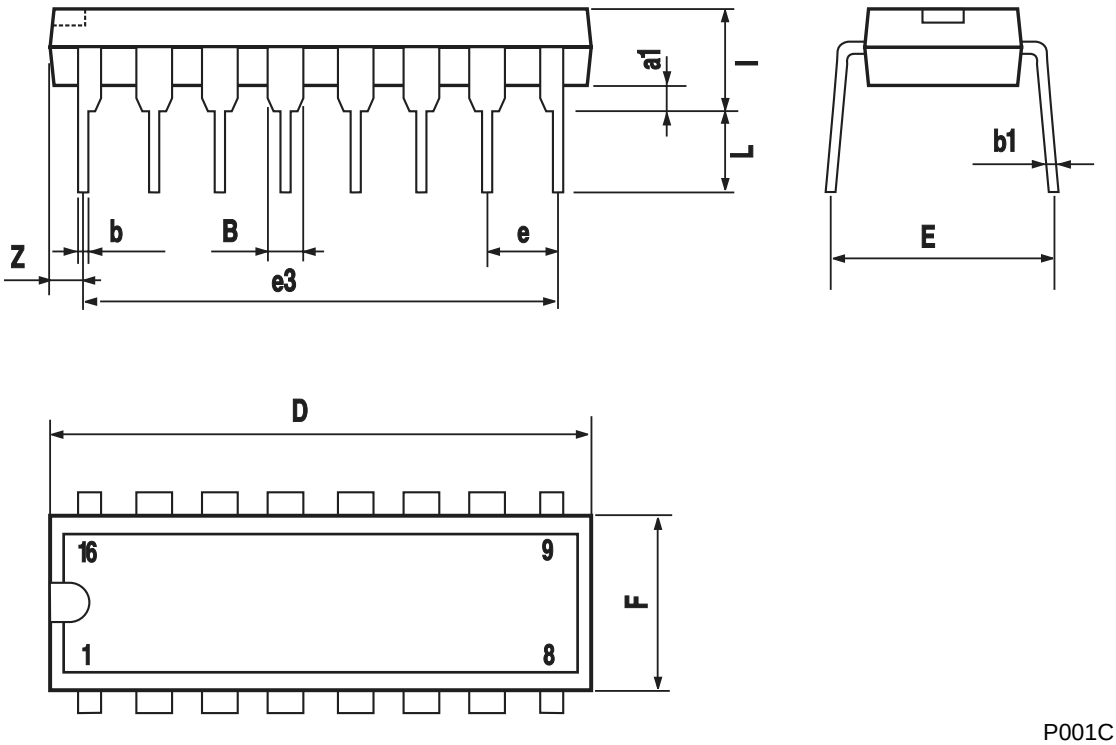

P001C

SO-16 MECHANICAL DATA

DIM.	mm.			inch		
	MIN.	TYP	MAX.	MIN.	TYP.	MAX.
A			1.75			0.068
a1	0.1		0.2	0.003		0.007
a2			1.65			0.064
b	0.35		0.46	0.013		0.018
b1	0.19		0.25	0.007		0.010
C		0.5			0.019	
c1	45° (typ.)					
D	9.8		10	0.385		0.393
E	5.8		6.2	0.228		0.244
e		1.27			0.050	
e3		8.89			0.350	
F	3.8		4.0	0.149		0.157
G	4.6		5.3	0.181		0.208
L	0.5		1.27	0.019		0.050
M			0.62			0.024
S	8° (max.)					

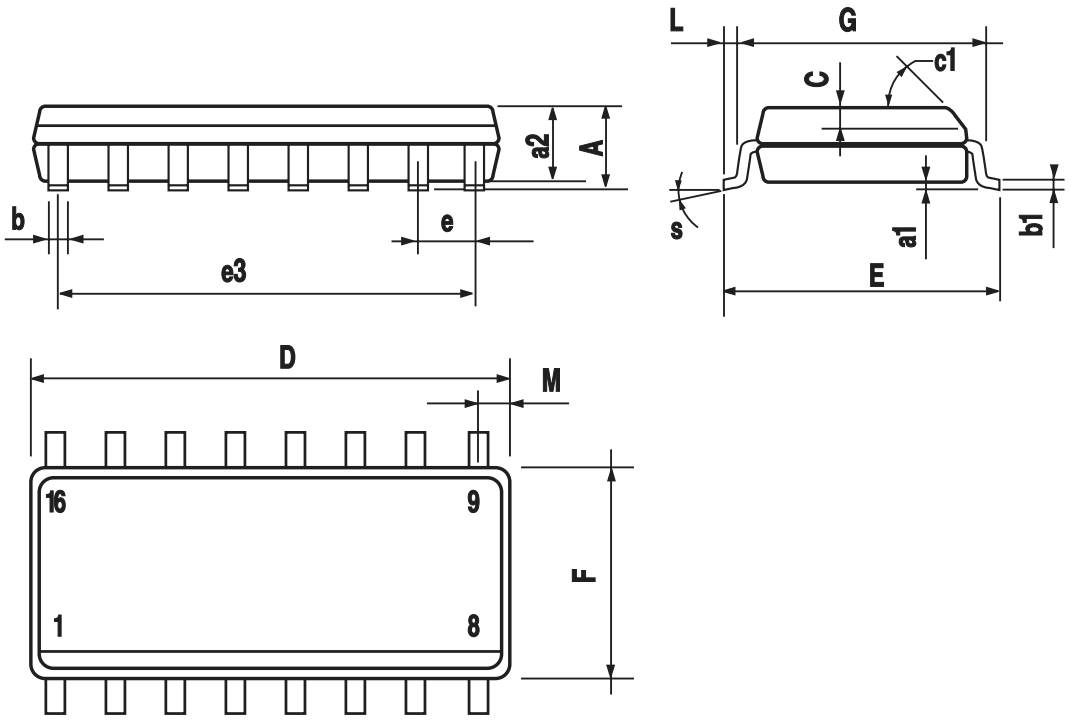

PO13H

TSSOP16 MECHANICAL DATA

DIM.	mm.			inch		
	MIN.	TYP	MAX.	MIN.	TYP.	MAX.
A			1.2			0.047
A1	0.05		0.15	0.002	0.004	0.006
A2	0.8	1	1.05	0.031	0.039	0.041
b	0.19		0.30	0.007		0.012
c	0.09		0.20	0.004		0.0089
D	4.9	5	5.1	0.193	0.197	0.201
E	6.2	6.4	6.6	0.244	0.252	0.260
E1	4.3	4.4	4.48	0.169	0.173	0.176
e		0.65 BSC			0.0256 BSC	
K	0°		8°	0°		8°
L	0.45	0.60	0.75	0.018	0.024	0.030

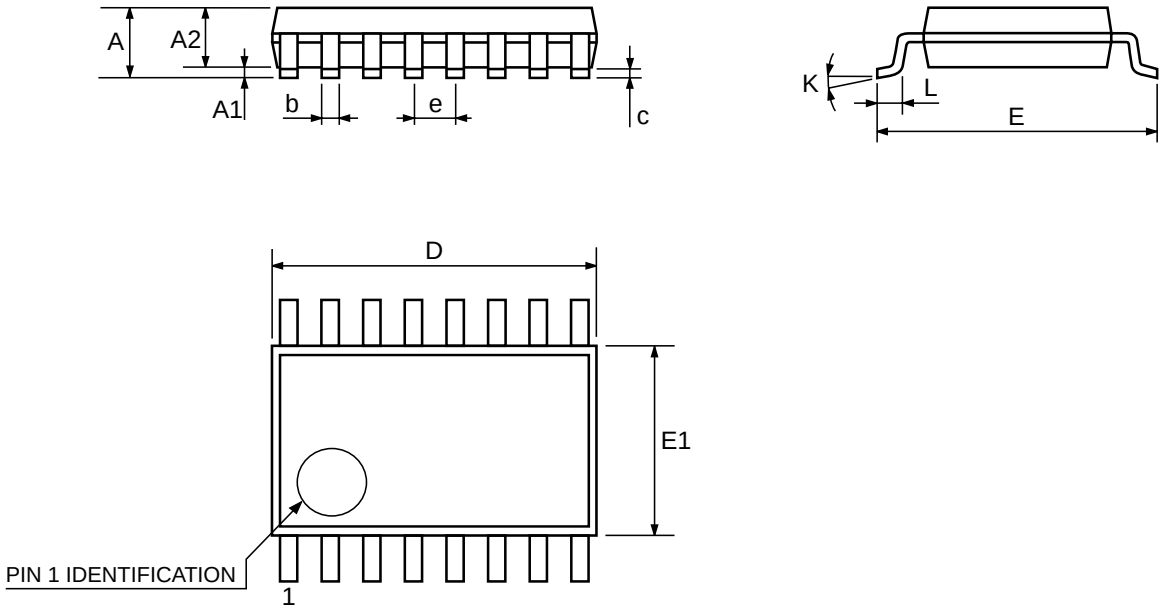

Information furnished is believed to be accurate and reliable. However, STMicroelectronics assumes no responsibility for the consequences of use of such information nor for any infringement of patents or other rights of third parties which may result from its use. No license is granted by implication or otherwise under any patent or patent rights of STMicroelectronics. Specifications mentioned in this publication are subject to change without notice. This publication supersedes and replaces all information previously supplied. STMicroelectronics products are not authorized for use as critical components in life support devices or systems without express written approval of STMicroelectronics.

© The ST logo is a registered trademark of STMicroelectronics

© 2001 STMicroelectronics - Printed in Italy - All Rights Reserved
STMicroelectronics GROUP OF COMPANIES
Australia - Brazil - China - Finland - France - Germany - Hong Kong - India - Italy - Japan - Malaysia - Malta - Morocco
Singapore - Spain - Sweden - Switzerland - United Kingdom
© http://www.st.com

ENTEGRECİ

Bu belge www.entegreci.com üzerinden sunulmaktadır.

Elektronik komponent tedarikinde Entegreci

Entegreci, Eskişehir merkezli, Türkiye geneline satış yapan bir elektronik komponent mağazasıdır. Entegreler (IC), mikrodenetleyiciler, transistörler, diyotlar, pasif elemanlar, konnektörler, modüller ve geliştirme kartları tek adetten seri üretim adetlerine kadar satılır. Ürün sayfalarında güncel stok durumunu, fiyatı ve datasheet bağlantısını bulabilirsiniz.

Parça koduyla arama

Üretici parça numarasını yazın; stok ve fiyatı hemen görün.

www.entegreci.com

Ürün kategorileri

Entegreden kapasitöre tüm elektronik komponent kategorileri.

Kategorilere göz atın

Üreticiler

Aradığınız üreticinin ürünlerini tek sayfada inceleyin.

Üreticileri görün

Toplu alım ve teklif

Listede olmayan ya da yüksek adetli parçalar için teklif isteyin.

Teklif isteyin

www.entegreci.com | **destek@entegreci.com** | **0850 305 90 34**

Entegreci is an online electronic components store based in Türkiye. Search by manufacturer part number to see stock, prices and datasheets for integrated circuits, microcontrollers, transistors, passive components and connectors, or request a quote for parts that are not listed.

Bu sayfa Entegreci tarafından eklenmiştir. Belgenin önceki sayfaları asıl yayıncısına aittir ve içeriği değiştirilmemiştir; en güncel sürüm için belgenin yayıncısına başvurun.