3-TERMINAL POSITIVE LINEAR REGULATORS AZ78XX

General Description

The AZ78XX series are monolithic integrated circuits designed as fixed-voltage regulators for a wide variety of applications including local, on-card regulation.

This series of regulators are complete with internal current limiting, thermal shutdown protection, and safe-area compensation which make them virtually immune from output overload. If adequate heat sinking are provided, these regulators can deliver output currents up to 1.0A.

The AZ78XX series are available in two standard plastic packages: TO-220 and TO-252.

Features

- Output Current up to 1.0A
- Fixed Output Voltages of 5V, 6V, 8V, 9V and 12V
- Output Voltage Tolerances of ± 5% over the Full Temperature Range
- Internal Short Circuit Current-limiting
- Internal Thermal Overload Protection

Applications

- Consumer Electronics
- Microprocessor Power Supply
- Mother Board I/O Power Supply

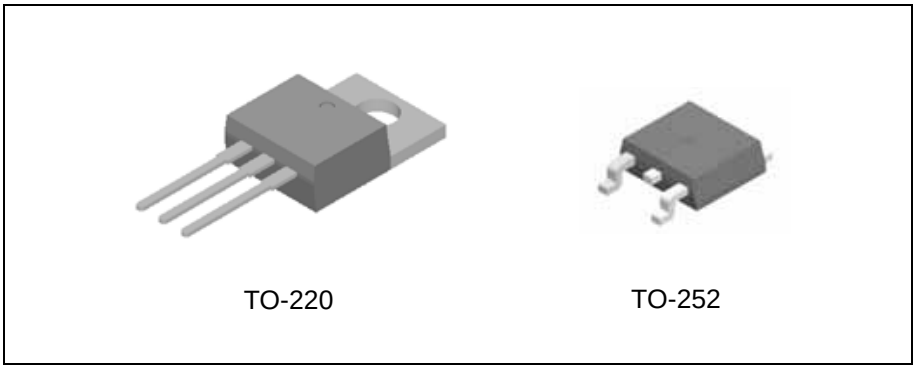

Figure 1. Package Types of AZ78XX

Pin Configuration

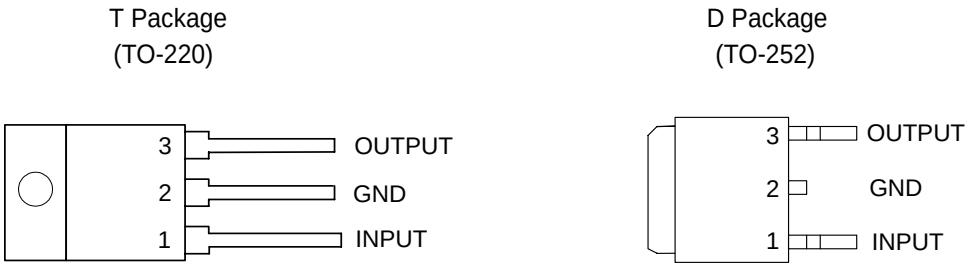

Figure 2. Pin Configuration of AZ78XX (Top View)

Pin Description

Pin Number	Pin Name	Function
1	INPUT	Voltage Input
2	GND	Ground
3	OUTPUT	Voltage Output

Functional Block Diagram

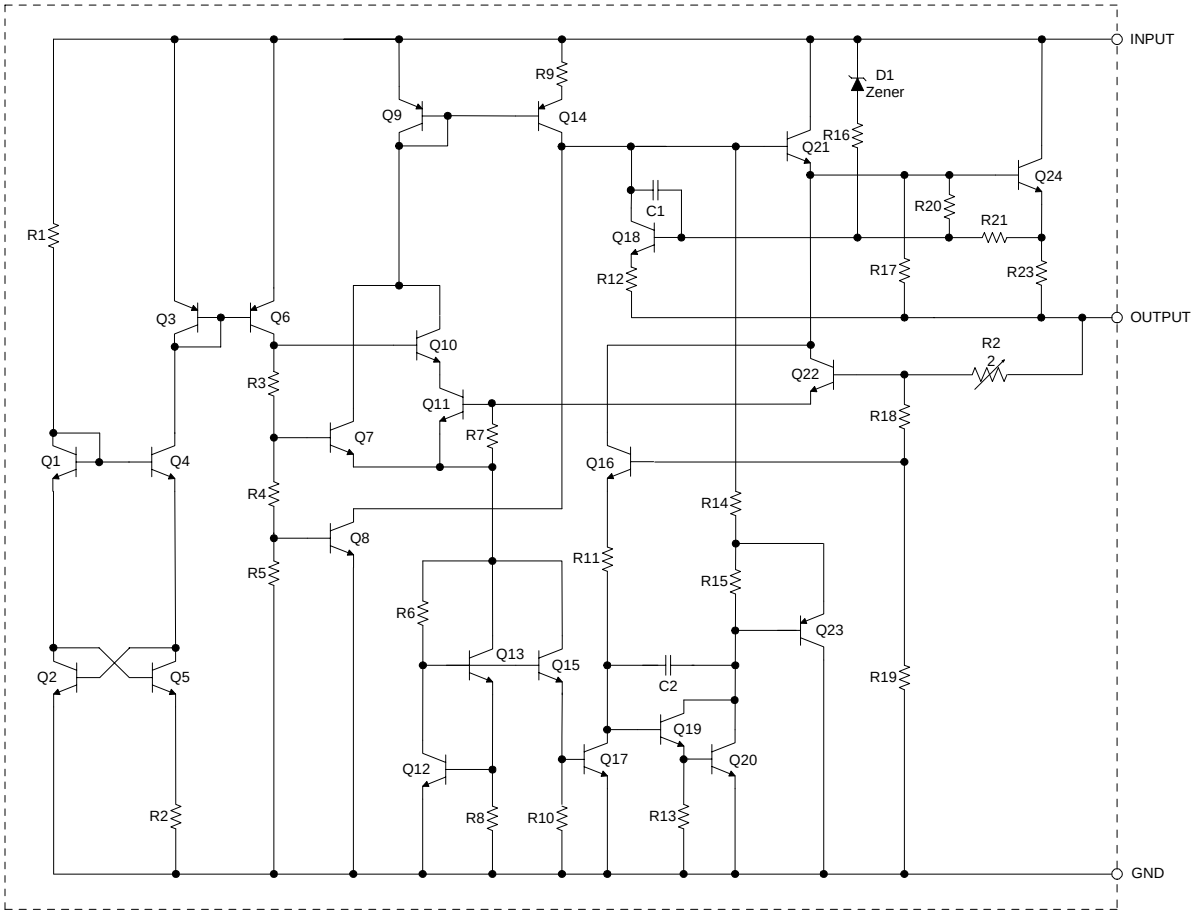

Figure 3. Functional Block Diagram of AZ78XX

Ordering Information

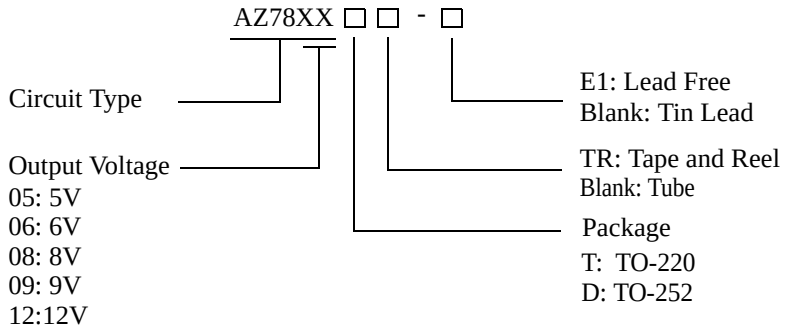

Package	Tempera-ture Range	Part Number		Marking ID		Packing Type
		Tin Lead	Lead Free	Tin Lead	Lead Free	
TO-220	-40 to 125°C	AZ7805T	AZ7805T-E1	AZ7805T	AZ7805T-E1	Tube
		AZ7806T	AZ7806T-E1	AZ7806T	AZ7806T-E1	Tube
		AZ7808T	AZ7808T-E1	AZ7808T	AZ7808T-E1	Tube
		AZ7809T	AZ7809T-E1	AZ7809T	AZ7809T-E1	Tube
		AZ7812T	AZ7812T-E1	AZ7812T	AZ7812T-E1	Tube
TO-252	-40 to 125°C	AZ7805D	AZ7805D-E1	AZ7805D	AZ7805D-E1	Tube
		AZ7805DTR	AZ7805DTR-E1	AZ7805D	AZ7805D-E1	Tape & Reel
		AZ7806D	AZ7806D-E1	AZ7806D	AZ7806D-E1	Tube
		AZ7806DTR	AZ7806DTR-E1	AZ7806D	AZ7806D-E1	Tape & Reel
		AZ7808D	AZ7808D-E1	AZ7808D	AZ7808D-E1	Tube
		AZ7808DTR	AZ7808DTR-E1	AZ7808D	AZ7808D-E1	Tape & Reel
		AZ7809D	AZ7809D-E1	AZ7809D	AZ7809D-E1	Tube
		AZ7809DTR	AZ7809DTR-E1	AZ7809D	AZ7809D-E1	Tape & Reel
		AZ7812D	AZ7812D-E1	AZ7812D	AZ7812D-E1	Tube
		AZ7812DTR	AZ7812DTR-E1	AZ7812D	AZ7812D-E1	Tape & Reel

BCD Semiconductor's Pb-free products, as designated with "E1" suffix in the part number, are RoHS compliant.

Absolute Maximum Ratings (Note 1)

Parameter	Symbol	Value	Unit
Input Voltage	V_{IN}	20	V
Lead Temperature (Soldering, 10sec)		300	°C
Power Dissipation	P_D	Internally Limited	
Storage Temperature Range	T_{STG}	-65 to 150	°C
ESD (Machine Model)	ESD	500	V

Note 1: Stresses greater than those listed under "Absolute Maximum Ratings" may cause permanent damage to the device. These are stress ratings only, and functional operation of the device at these or any other conditions beyond those indicated under "Recommended Operating Conditions" is not implied. Exposure to "Absolute Maximum Ratings" for extended periods may affect device reliability.

Recommended Operating Conditions

Parameter	Symbol	Min	Max	Unit
Supply Voltage	V_{CC}	7.5	18	V
Operating Junction Temperature Range	T_J	-40	125	℃

Electrical Characteristics

AZ7805 (V_I=10V, I_O=1A, T_J=-40 to 125 °C, unless otherwise specified.)

Parameter	Symbol	Conditions	Min	Typ	Max	Unit
Output Voltage	V_O	T_J=25°C	4.9	5.0	5.1	V
		I_O=5mA to 1A, V_I=7.5 to 15V, $P_D \leqslant$ 15W	4.8	5.0	5.2	
Line Regulation	V_{RLINE}	V_I=8V to 15V, I_O=1A, T_J=25°C		1	20	mV
Load Regulation	V_{RLOAD}	V_I=10V, I_O=5mA to 1A, T_J=25°C		10	35	mV
Quiescent Current	I_Q	V_I=10V		3.2	6.0	mA
Quiescent Current Change	ΔI_Q	V_I=8V to 15V, I_O=500mA, T_J=25°C		0.3	0.8	mA
		I_O=5mA to 1A, T_J=25°C		0.08	0.5	
Ripple Rejection	$\Delta V_I/\Delta V_O$	V_I=8V to 15V, f=120Hz, I_O=300mA	63	73		dB
Dropout Voltage	V_I-V_O	$\Delta V_O/V_O$=1%, I_O=1A, T_J=25°C		2.0		V
Output Noise Voltage	N_O	f=10Hz to 100KHz, T_A=25°C		10		$\mu V/V_O$
Output Resistance	R_O	f=1.0kHz		10		mΩ
Short Circuit Current	I_{PK}	V_I=15V, T_A=25°C		0.8		A
Peak Output Current	I_{MAX}	V_I=10V, T_J=25°C		2.2		A
Output Voltage Drift	$\Delta V_O/\Delta T$			-0.3		mV/°C

AZ7806 (V_I=11V, I_O=1A, T_J=-40 to 125 °C, unless otherwise specified.)

Parameter	Symbol	Conditions	Min	Typ	Max	Unit
Output Voltage	V_O	T_J=25°C	5.88	6.0	6.12	V
		I_O=5mA to 1A, V_I=8.6 to 15V, $P_D \leqslant$ 15W	5.76	6.0	6.24	
Line Regulation	V_{RLINE}	V_I=9V to 15V, I_O=1A, T_J=25°C		1.6	25	mV
Load Regulation	V_{RLOAD}	V_I=11V, I_O=5mA to 1A, T_J=25°C		20	37	mV
Quiescent Current	I_Q	V_I=11V		3.3	6.0	mA
Quiescent Current Change	ΔI_Q	V_I=9V to 15V, I_O=500mA, T_J=25°C		0.3	0.8	mA
		I_O=5.0mA to 1A, T_J=25°C		0.08	0.5	
Ripple Rejection	$\Delta V_I/\Delta V_O$	V_I=9V to 15V, f=120Hz, I_O=300mA	58	65		dB
Dropout Voltage	V_I-V_O	$\Delta V_O/V_O$=1%, I_O=1A, T_J=25°C		2.0		V
Output Noise Voltage	N_O	f=10Hz to 100KHz, T_A=25°C		10		$\mu V/V_O$
Output Resistance	R_O	f=1.0kHz		10		mΩ
Short Circuit Current	I_{PK}	V_I=15V, T_A=25°C		0.8		A
Peak Output Current	I_{MAX}	V_I=11V, T_J=25°C		2.2		A
Output Voltage Drift	$\Delta V_O/\Delta T$			-0.3		mV/°C

Electrical Characteristics (Continued)

AZ7808 (V_I=14V, I_O=1A, T_J=-40 to 125 °C, unless otherwise specified.)

Parameter	Symbol	Conditions	Min	Typ	Max	Unit
Output Voltage	V_O	T_J=25°C	7.8	8.0	8.2	V
		I_O=5mA to 1A, V_I=10.6 to 15V, $P_D \leqslant$ 15W	7.7	8.0	8.3	
Line Regulation	V_{RLINE}	V_I=11V to 15V, I_O=1A, T_J=25°C		2	26	mV
Load Regulation	V_{RLOAD}	V_I=14V, I_O=5mA to 1A, T_J=25°C		15	37	mV
Quiescent Current	I_Q	V_I=14V		3.3	6.0	mA
Quiescent Current Change	ΔI_Q	V_I=10.6V to 15V, I_O=500mA, T_J=25°C			0.8	mA
		I_O=5.0mA to 1A, T_J=25°C			0.5	
Ripple Rejection	$\Delta V_I/\Delta V_O$	V_I=11V to 15V, f=120Hz, I_O=300mA	56	62		dB
Dropout Voltage	V_I-V_O	$\Delta V_O/V_O$=1%, I_O=1A, T_J=25°C		2.0		V
Output Noise Voltage	N_O	f=10Hz to 100KHz, T_A=25°C		10		$\mu V/V_O$
Output Resistance	R_O	f=1.0kHz		10		mΩ
Short Circuit Current	I_{PK}	V_I=15V, T_A=25°C		0.8		A
Peak Output Current	I_{MAX}	V_I=13V, T_J=25°C		2.2		A
Output Voltage Drift	$\Delta V_O/\Delta T$			-0.4		mV/°C

AZ7809 (V_I=15V, I_O=1A, T_J=-40 to 125 °C, unless otherwise specified.)

Parameter	Symbol	Condition	Min	Typ	Max	Unit
Output Voltage	V_O	T_J=25°C	8.65	9.0	9.35	V
		I_O=5mA to 1A, V_I=11.5 to 15V, $P_D \leqslant$ 15W	8.55	9.0	9.45	
Line Regulation	V_{RLINE}	V_I=11.5V to 15V, I_O=1A, T_J=25°C		1.8	24	mV
Load Regulation	V_{RLOAD}	V_I=15V, I_O=5mA to 1A, T_J=25°C		14	36	mV
Quiescent Current	I_Q	V_I=15V		3.4	8.0	mA
Quiescent Current Change	ΔI_Q	V_I=11.5V to 15V, I_O=500mA, T_J=25°C			1.0	mA
		I_O=5.0mA to 1A, T_J=25°C			0.5	
Ripple Rejection	$\Delta V_I/\Delta V_O$	V_I=12V to 15V, f=120Hz, I_O=300mA	56	61		dB
Dropout Voltage	V_I-V_O	$\Delta V_O/V_O$=1%, I_O=1A		2.0		V
Output Noise Voltage	N_O	f=10Hz to 100KHz, T_A=25°C		10		$\mu V/V_O$
Output Resistance	R_O	f=1.0KHz		12		mΩ
Short Circuit Current	I_{PK}	V_I=15V, T_A=25°C		0.8		A
Peak Output Current	I_{MAX}	V_I=14V, T_J=25°C		2.2		A
Output Voltage Drift	$\Delta V_O/\Delta T$			-0.5		mV/°C

Electrical Characteristics (Continued)

AZ7812 (V_I=17V, I_O=1A, T_J=-40 to 125 ^oC, unless otherwise specified.)

Parameter	Symbol	Condition	Min	Typ	Max	Unit
Output Voltage	V_O	T_J=25°C	11.5	12	12.5	V
		I_O=5mA to 1A, V_I=14.8 to 17V, $P_D \leqslant$ 15W	11.4	12	12.6	
Line Regulation	V_{RLINE}	V_I=14.5 to 18V, I_O=1A, T_J=25°C		2.2	20	mV
Load Regulation	V_{RLOAD}	V_I=17V, I_O=5mA to 1A, T_J=25°C		8.1	60	mV
Quiescent Current	I_Q	V_I=17V		3.4	6.5	mA
Quiescent Current Change	ΔI_Q	V_I=14.5 to 17V, I_O=1A, T_J=25°C			0.7	mA
		I_O=5.0mA to 1A, T_J=25°C			0.5	
Ripple Rejection	$\Delta V_I/\Delta V_O$	V_I=15V to 17V, f=120Hz, I_O=300mA	55	60		dB
Dropout Voltage	V_I-V_O	$\Delta V_O/V_O$=1%, I_O=1A, T_A=25°C		2.0		V
Output Noise Voltage	N_O	f=10Hz to 100KHz, T_A=25°C		10		$\mu V/V_O$
Output Resistance	R_O	f=1.0KHz		13		mΩ
Short Circuit Current	I_{PK}	V_I=15V, T_A=25°C		0.8		A
Peak Output Current	I_{MAX}	V_I=17V, T_J=25°C		2.2		A
Output Voltage Drift	$\Delta V_O/\Delta T$			-0.8		mV/^{o}C

Typical Performance Characteristics

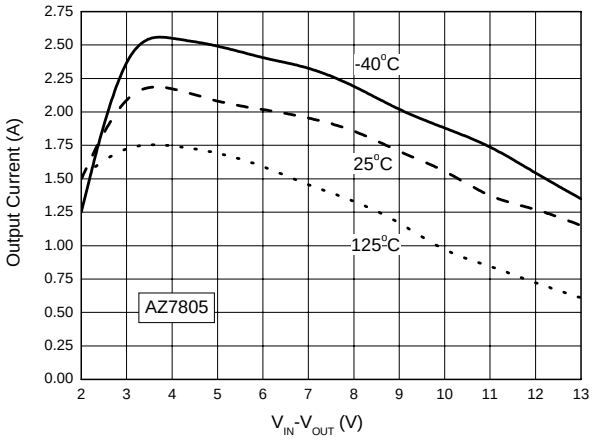

Figure 4. Peak Output Current vs. Input / Output Differential Voltage

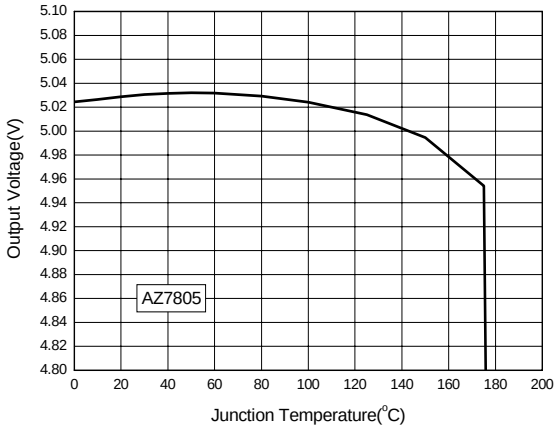

Figure 5. Output Voltage vs. Junction Temperature

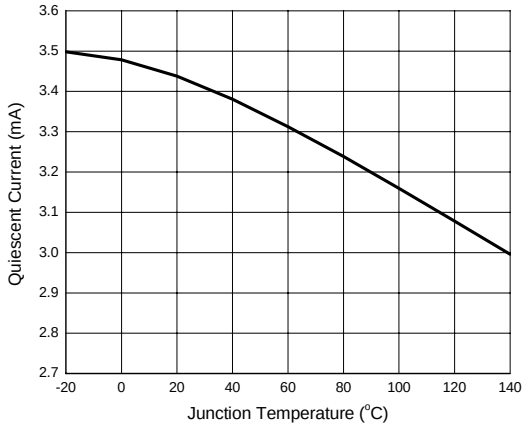

Figure 6. Quiescent Current vs. Junction Temperature

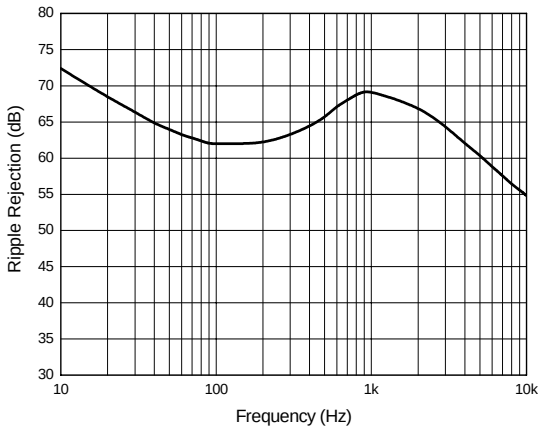

Figure 7. Ripple Rejection vs. Frequency

Typical Application

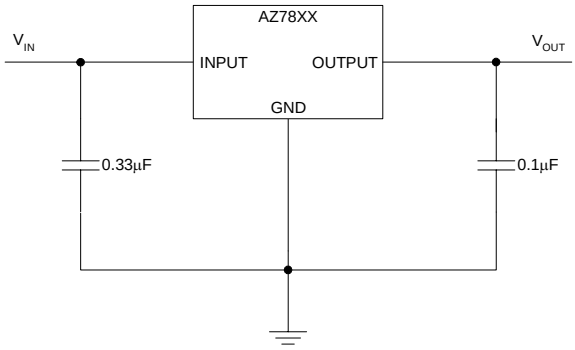

Figure 8. Fixed Output Regulator of AZ78XX

Mechanical Dimension

TO-220 **Unit: mm(inch)**

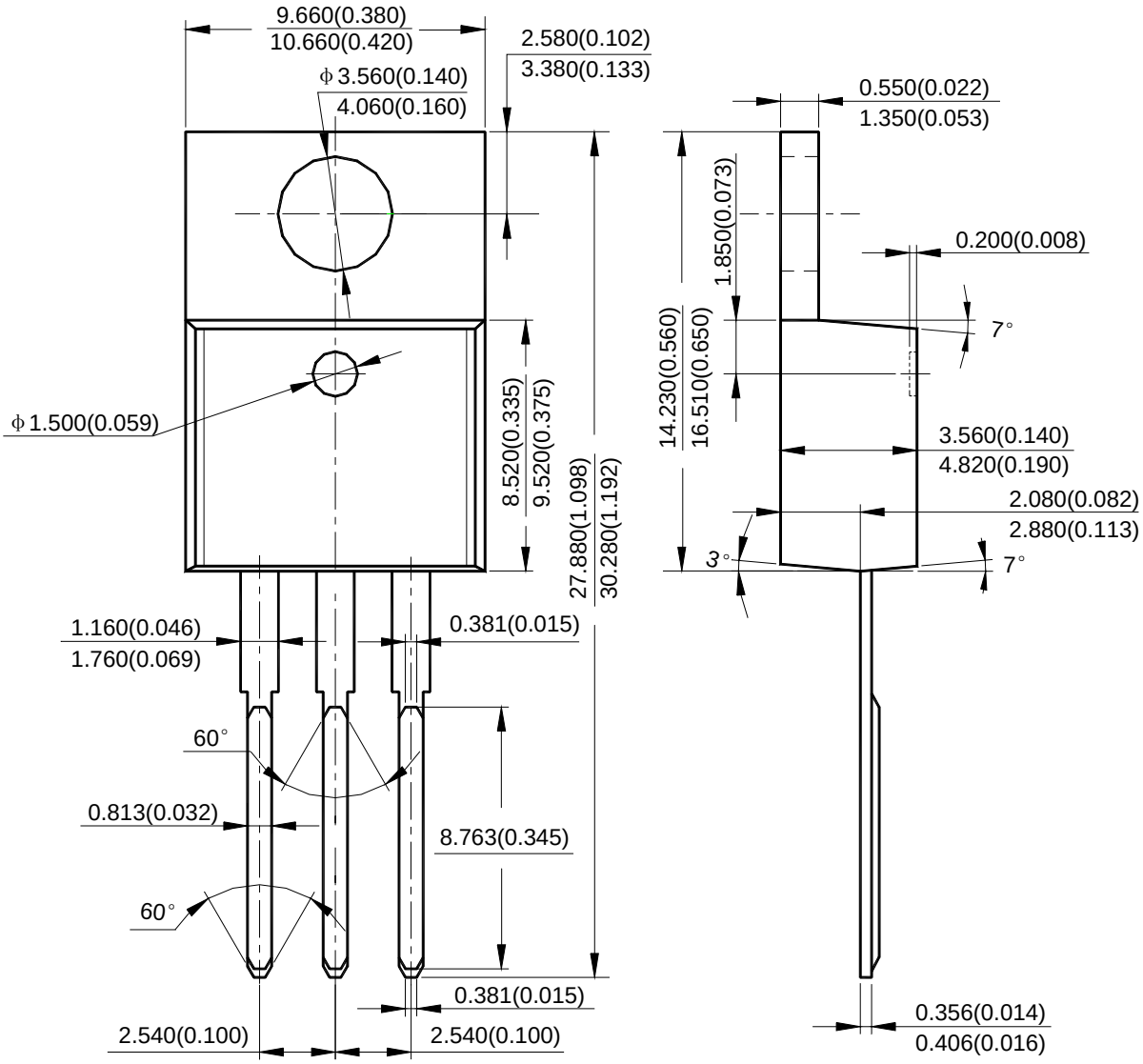

Mechanical Dimension (Continued)

TO-252 **Unit: mm(inch)**

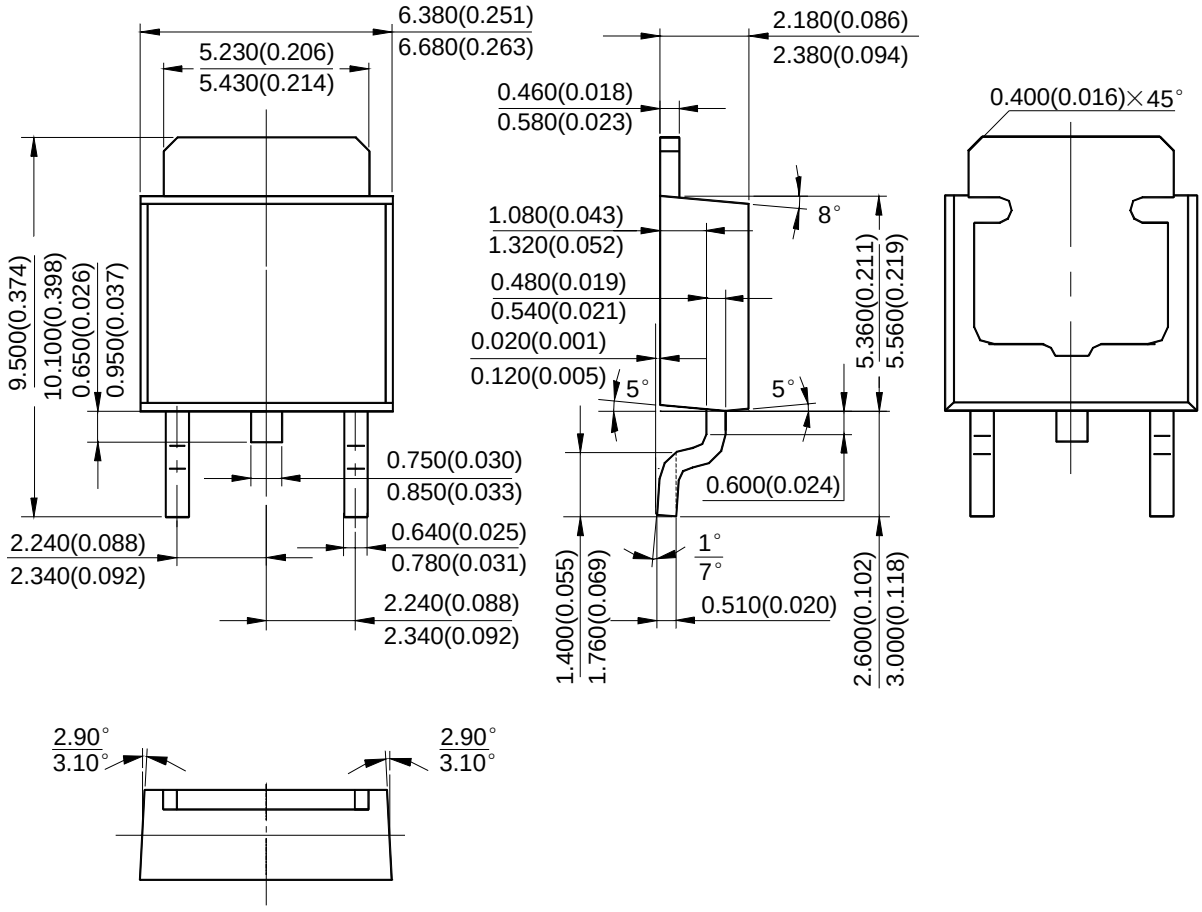

BCD Semiconductor Manufacturing Limited

http://www.bcdsemi.com

BCD Semiconductor Corporation

3170 De La Cruz Blvd, Suite # 105 Santa Clara, CA 95054-2411, U.S.A Tel: +1-408-988 6388, Fax: +1-408-988 6386

Shanghai SIM-BCD Semiconductor Manufacturing Co., Ltd.

800 Yi Shan Road, Shanghai 200233, PRC Tel: +86-21-6485 1491, Fax: +86-21-5450 0008

Advanced Analog Circuits (Shanghai) Corporation

8F, B Zone, 900 Yi Shan Road, Shanghai 200233, PRC Tel: +86-21-6495 9539, Fax: +86-21-6485 9673

BCD Semiconductor (Taiwan) Company Limited

4F, 298-1 Rui Guang Road, Nei-Hu District, Taipei, Taiwan Tel: +886-2-2656-2808, Fax: +886-2-2656-2806

IMPORTANT NOTICE

BCD Semiconductor Manufacturing Limited reserves the right to make changes without further notice to any products or specifications herein. BCD Semiconductor Manufacturing Limited does not assume any responsibility for use of any its products for any particular purpose, nor does BCD Semiconductor Manufacturing Limited assume any liability arising out of the application or use of any its products or circuits. BCD Semiconductor Manufacturing Limited does not convey any license under its patent rights or other rights nor the rights of others.

ENTEGRECİ

Bu belge www.entegreci.com üzerinden sunulmaktadır.

Elektronik komponent tedarikinde Entegreci

Entegreci, Eskişehir merkezli, Türkiye geneline satış yapan bir elektronik komponent mağazasıdır. Entegreler (IC), mikrodenetleyiciler, transistörler, diyotlar, pasif elemanlar, konnektörler, modüller ve geliştirme kartları tek adetten seri üretim adetlerine kadar satılır. Ürün sayfalarında güncel stok durumunu, fiyatı ve datasheet bağlantısını bulabilirsiniz.

Parça koduyla arama

Üretici parça numarasını yazın; stok ve fiyatı hemen görün.

www.entegreci.com

Ürün kategorileri

Entegreden kapasitöre tüm elektronik komponent kategorileri.

Kategorilere göz atın

Üreticiler

Aradığınız üreticinin ürünlerini tek sayfada inceleyin.

Üreticileri görün

Toplu alım ve teklif

Listede olmayan ya da yüksek adetli parçalar için teklif isteyin.

Teklif isteyin

www.entegreci.com | **destek@entegreci.com** | **0850 305 90 34**

Entegreci is an online electronic components store based in Türkiye. Search by manufacturer part number to see stock, prices and datasheets for integrated circuits, microcontrollers, transistors, passive components and connectors, or request a quote for parts that are not listed.

Bu sayfa Entegreci tarafından eklenmiştir. Belgenin önceki sayfaları asıl yayıncısına aittir ve içeriği değiştirilmemiştir; en güncel sürüm için belgenin yayıncısına başvurun.