Single Phase, Isolated, Power Monitoring IC with Voltage Zero Crossing and Overcurrent Detection

FEATURES AND BENEFITS

- Accurate power monitoring for both AC and DC applications
- UL certification for reinforced isolation up to 517 V_{RMS} in a single package
- Accurate measurements of active, reactive, and apparent power, as well as power factor
- Separate RMS and instantaneous measurements for both voltage and current channels
- 0.85 mΩ primary conductor resistance for low power loss and high inrush current withstand capability
- Dedicated voltage zero crossing pin
- Overcurrent fault output pin
- Hall-effect-based current measurement with common-mode stray field rejection
- User-programmable undervoltage and overvoltage thresholds for input voltage as well as overcurrent fault thresholds
- 1 kHz bandwidth
- Current-sensing range from 0 to 90 A
- Options for I²C or SPI digital interface protocols
- User-programmable EEPROM and integrated charge pump
- 16-bit voltage and current ADCs

PACKAGE

16-pin SOICW (suffix MA)

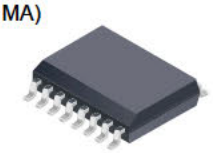

Not to scale

DESCRIPTION

The Allegro ACS71020 power monitoring IC greatly simplifies the addition of power monitoring to many AC or DC powered systems. The sensor may be powered from the same supply as the system's MCU, eliminating the need for multiple power supplies and expensive digital isolation ICs. The device's construction includes a copper conduction path that generates a magnetic field proportional to applied current. The magnetic field is sensed differentially to reject errors introduced by common mode fields.

Allegro's Hall-effect-based galvanically isolated current sensing technology achieves reinforced isolation ratings in a small PCB footprint. These features enable isolated current sensing without expensive Rogowski coils, oversized current transformers, isolated operational amplifiers, or the power loss of shunt resistors.

The ACS71020 power monitoring IC offers key power measurement parameters that can easily be accessed through its SPI or I²C digital protocol interfaces. Dedicated and configurable I/O pins for voltage zero crossing, undervoltage and overvoltage reporting, and overcurrent fault detection are also available (in I²C mode). The thresholds for overvoltage, undervoltage, and overcurrent are all user-programmable via EEPROM.

The ACS71020 is provided in a small low-profile surface mount SOIC16 wide-body package, is lead (Pb) free, and is fully calibrated prior to shipment from the Allegro factory. Customer calibration can further increase accuracy in application.

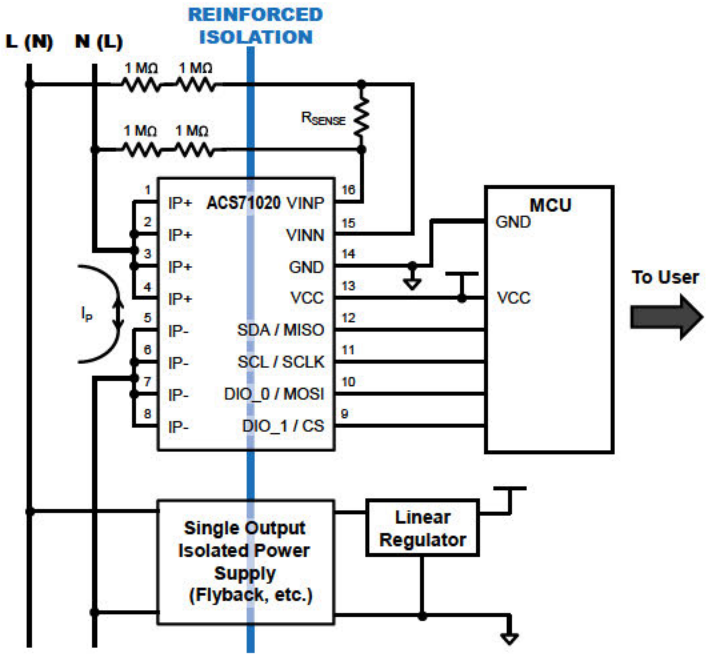

Figure 1: Typical Application

CB Certificate Number:
US-32210-M1-UL

SELECTION GUIDE

Part Number	$V_{CC(NOM)}$ (V)	I_{PR} (A)	Communication Protocol	T_A (°C)	Packing [1]
ACS71020KMABTR-015B5-SPI	5	±15	SPI	–40 to 125	Tape and reel, 1000 pieces per reel, 3000 pieces per box
ACS71020KMABTR-030B3-SPI	3.3	±30			
ACS71020KMABTR-030B3-I2C	3.3	±30	I²C		
ACS71020KMABTR-090B3-I2C	3.3	±90			

[1] Contact Allegro for additional packing options

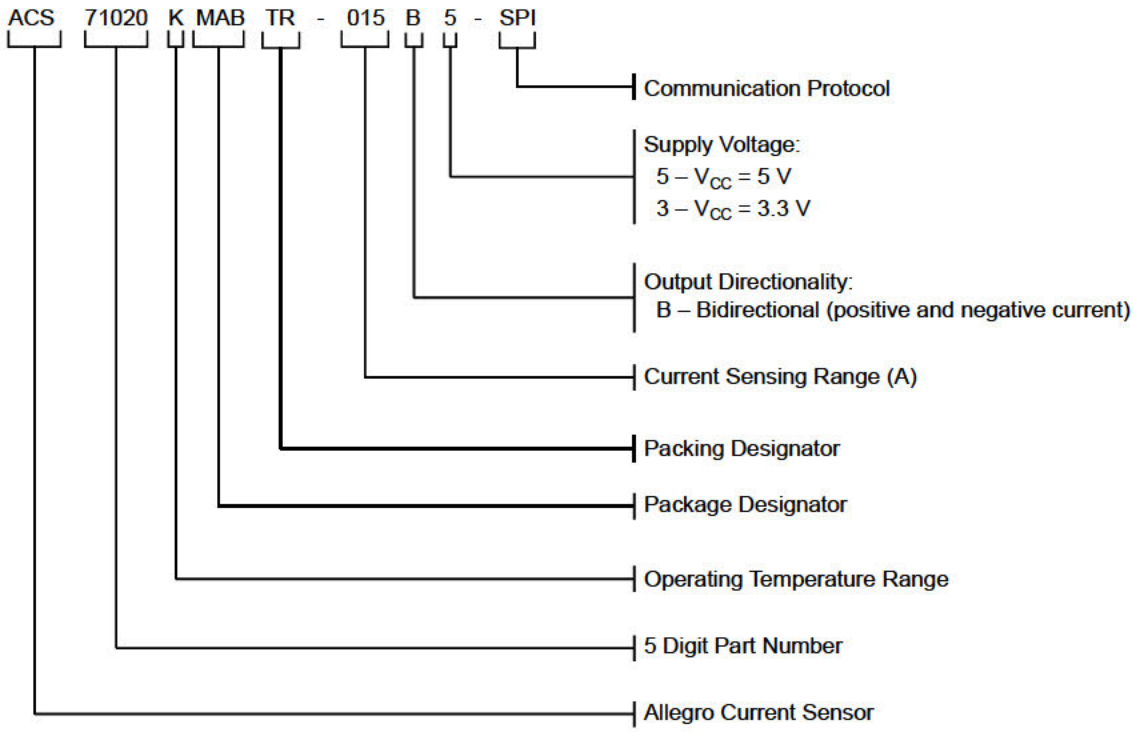

ABSOLUTE MAXIMUM RATINGS

Characteristic	Symbol	Notes	Rating	Units
Supply Voltage	V_{CC}		6.5	V
Reverse Supply Voltage	V_{RCC}		–0.5	V
Input Voltage	V_{INP}, V_{INN}		V_{CC} + 0.5	V
Reverse Input Voltage	V_{RNP}, V_{RNN}		–0.5	V
Digital I/O Voltage	V_{DIO}	SPI, I²C, and general purpose I/O	6	V
Reverse Digital I/O Voltage	V_{RDIO}		–0.5	V
Operating Ambient Temperature	T_A	Range K	–40 to 125	°C
Junction Temperature	T_J(max)		165	°C
Storage Temperature	T_{stg}		–65 to 170	°C

ISOLATION CHARACTERISTICS

Characteristic	Symbol	Notes	Rating	Unit
Dielectric Strength Test Voltage	V_{ISO}	Agency type-tested for 60 seconds per UL 60950-1 (edition 2). Production tested at 3000 V_{RMS} for 1 second, in accordance with UL 60950-1 (edition 2).	4800	V_{RMS}
Working Voltage for Basic Isolation	V_{WVBI}	Maximum approved working voltage for basic (single) isolation according to UL 60950-1 (edition 2).	1480	V_{PK}
			1047	V_{RMS} or V_{DC}
Working Voltage for Reinforced Isolation	V_{WVRI}	Maximum approved working voltage for reinforced isolation according to UL 60950-1 (edition 2).	730	V_{PK}
			517	V_{RMS} or V_{DC}
Clearance	D_{cl}	Minimum distance through air from IP leads to signal leads.	7.5	mm
Creepage	D_{cr}	Minimum distance along package body from IP leads to signal leads	7.5	mm

THERMAL CHARACTERISTICS

Characteristic	Symbol	Test Conditions*	Value	Units
Package Thermal Resistance (Junction to Ambient)	$R_{\theta JA}$	Mounted on the Allegro 85-0738 evaluation board with 700 mm² of 4 oz. copper on each side, connected to pins 1 and 2, and to pins 3 and 4, with thermal vias connecting the layers. Performance values include the power consumed by the PCB.	23	°C/W
Package Thermal Resistance (Junction to Lead)	$R_{\theta JL}$	Mounted on the Allegro ACS71020 evaluation board.	5	°C/W

*Additional thermal information available on the Allegro website. See https://www.allegromicro.com/en/Design-Center/Technical-Documents/Hall-Effect-Sensor-IC-Publications/DC-and-Transient-Current-Capability-Fuse-Characteristics.aspx.

FUNCTIONAL BLOCK DIAGRAM

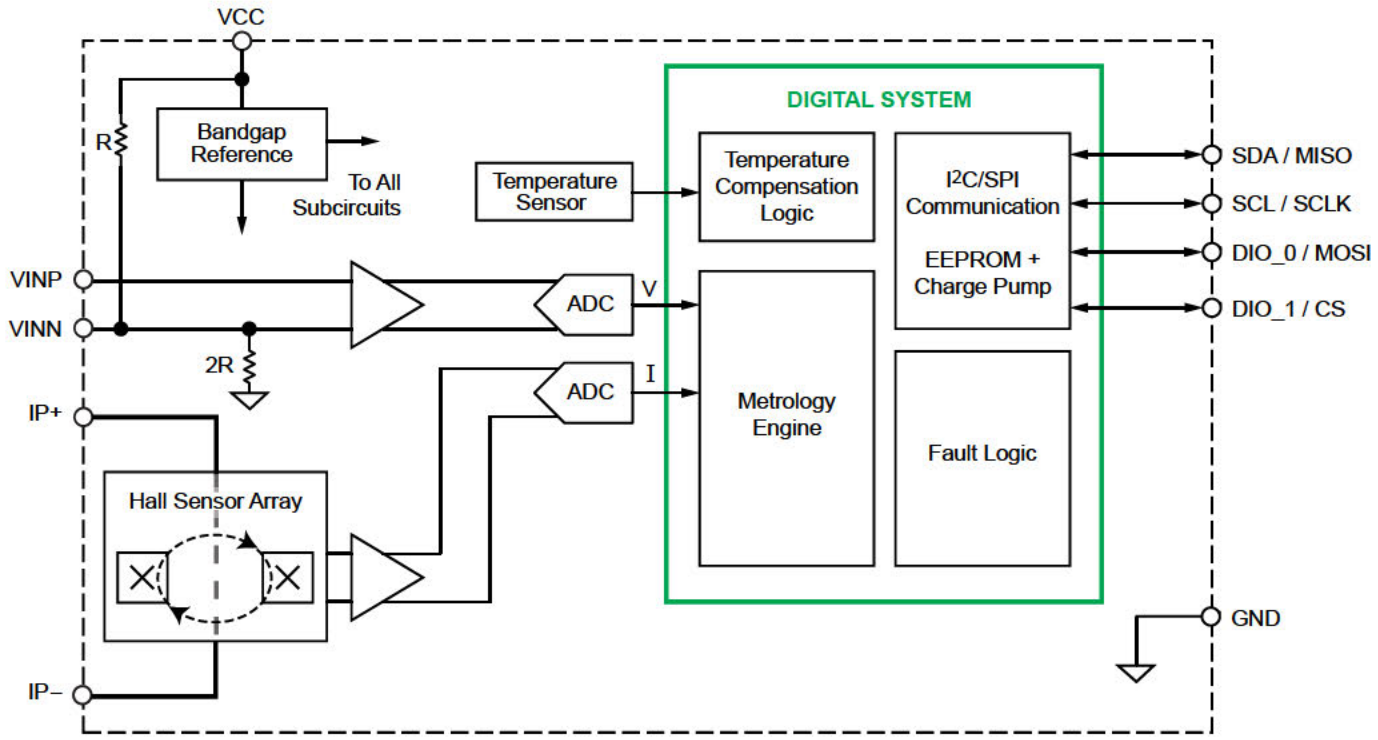

Table of Contents

Features and Benefits 1
Description 1
Package 1
Typical Application 1
Selection Guide 2
Absolute Maximum Ratings 3
Isolation Characteristics 3
Thermal Characteristics 3
Functional Block Diagram 4
Pinout Diagram and Terminal List 5
Digital I/O 5
Electrical Characteristics 6
Data Acquisition 12
ADCs 12
Raw Signal Sensitivity and Offset Trim 12
Phase Compensation 12
Zero Crossing 12
Power Calculations 13
Digital Communication 15
Registers and EEPROM 15
EEPROM Error Checking and Correction (ECC) 17
Memory Map 18
Volatile Memory Map 26
Application Connections 34
Recommended PCB Layout 35
Package Outline Drawing 36

PINOUT DIAGRAM AND TERMINAL LIST

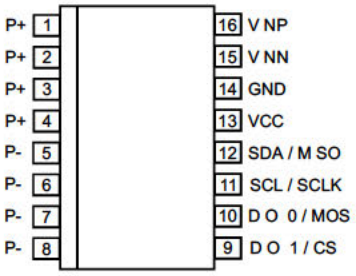

Pinout Diagram

Terminal List Table

Number	Name	Description	
		I2C	SPI
1, 2, 3, 4	IP+	Terminals for current being sensed; fused internally	
5, 6, 7, 8	IP-	Terminals for current being sensed; fused internally	
9	DIO_1/CS	Digital I/O 1	Chip Select (CS)
10	DIO_0/MOSI	Digital I/O 0	MOSI
11	SCL /SCLK	SCL	SCLK
12	SDA /MISO	SDA	MISO
13	VCC	Device power supply terminal	
14	GND	Device Power and Signal ground terminal	
15	VINN	Negative Input Voltage	
16	VINP	Positive Input Voltage	

DIGITAL I/O

The Digital I/O can be programmed to represent the following functions (Digital Output pins are low true):

DIO_0:

0. VZC: Voltage zero crossing
1. OVRMS: The VRMS overvoltage flag
2. UVRMS: The VRMS undervoltage flag
3. The OR of OVRMS and UVRMS (if either flag is triggered, the DIO_0 pin will be asserted)

DIO_1:

0. OCF: Overcurrent fault
1. UVRMS: The VRMS undervoltage flag
2. OVRMS: The VRMS overvoltage flag
3. The OR of OVRMS, UVRMS, and OCF_LAT [Latched Overcurrent fault] (if any of the three flags are triggered, the DIO_1 pin will be asserted)

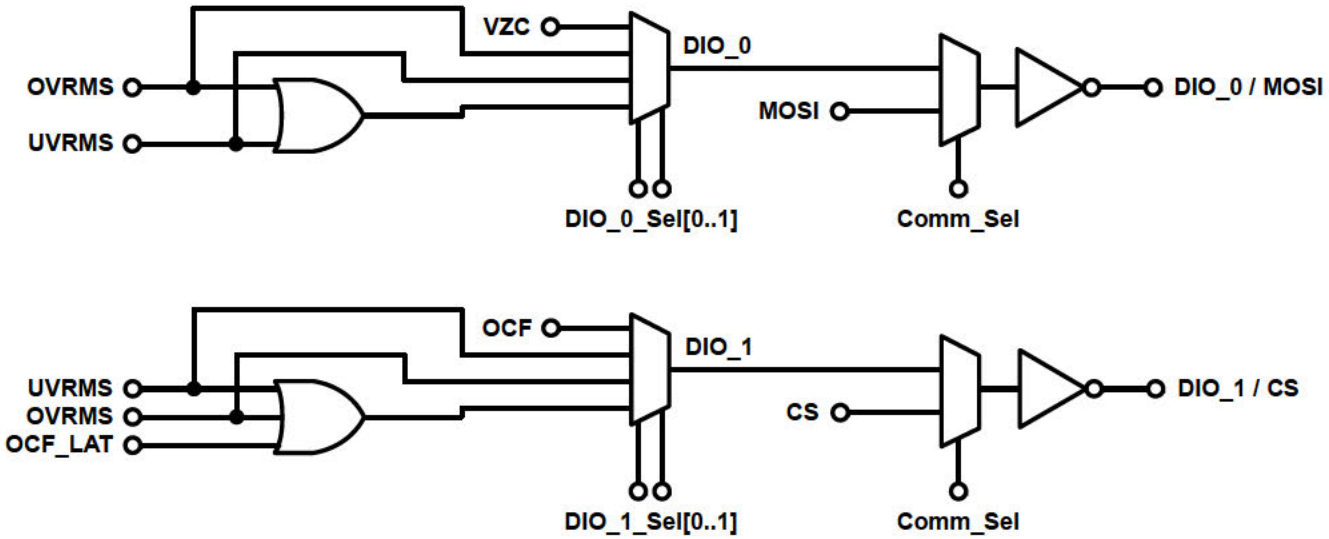

COMMON ELECTRICAL CHARACTERISTICS [1]: Valid through the full range of T_A and V_{CC} = V_{CC}(nom), unless otherwise specified

Characteristic	Symbol	Test Conditions	Min.	Typ.	Max.	Unit
ELECTRICAL CHARACTERISTICS						
Supply Voltage	V_{CC}		$V_{CC(nom)}$ × 0.9	$V_{CC(nom)}$	$V_{CC(nom)}$ × 1.1	V
Supply Current	I_{CC}	V_{CC}(min) ≤ V_{CC} ≤ V_{CC}(max), no load on output pins	–	12	14	mA
VOLTAGE INPUT BUFFER						
Differential Input Range	ΔV_{IN}	$V_{INP} - V_{INN}$	–275	–	275	mV
Common Mode Input Voltage	$V_{N(CM)}$		$^2/_3 \times V_{CC} - 0.275$	–	$^2/_3 \times V_{CC} + 0.275$	V
VOLTAGE CHANNEL ADC						
Sample Frequency	f_S		–	32	–	kHz
Number of Bits	$N_{ADC(V)}$		–	16	–	bits
Voltage ADC Power Supply Rejection	V_PSRR	Ratio of change on V_{CC} to change in ADC internal reference at DC	60	70	–	dB
VOLTAGE CHANNEL						
Noise	V_N		–	10	–	LSB
Internal Bandwidth	BW		–	1	–	kHz
Linearity Error	E_{LIN}		–	±0.2	–	%
CURRENT CHANNEL ADC						
Sample Frequency	f_S		–	32	–	kHz
Number of Bits	$N_{ADC(I)}$		–	16	–	bits
Current Channel ADC Power Supply Rejection	I_PSRR	Ratio of change on V_{CC} to change in ADC internal reference at DC	60	70	–	dB
CURRENT CHANNEL						
Internal Bandwidth	BW		–	1	–	kHz
Primary Conductor Resistance	R_P	T_A = 25°C	–	0.85	–	mΩ
Noise	V_N		–	100	–	LSB
Linearity Error	E_{LIN}		–	±1.5	–	%
OVERCURRENT FAULT CHARACTERISTICS						
Fault Response Time	t_{RF}	Time from I_P rising above I_{FAULT} until V_{FAULT} < $V_{FAULT(max)}$ for a current step from 0 to 1.2 × I_{FAULT}; 10 kΩ and 100 pF from DIO_1 to ground; fltdly = 0	–	5	–	µs
Internal Bandwidth	BW		–	200	–	kHz
Fault Hysteresis [2]	I_{HYST}		–	0.05 × I_{PR}	–	A
Fault Range	I_{FAULT}	Set using FAULT field in EEPROM	0.5 × I_{PR}	–	1.75 × I_{PR}	A
VOLTAGE ZERO CROSSING						
Voltage Zero Crossing Delay	t_d		_	700		µs

[1] Device may be operated at higher primary current levels, I_P, ambient, T_A, and internal leadframe temperatures, T_A, provided that the Maximum Junction Temperature, T_J(max), is not exceeded.
[2] After I_P goes above I_{FAULT}, tripping the internal fault comparator, I_P must go below $I_{FAULT} - I_{HYST}$, before the internal fault comparator will reset.

Continued on next page...

xKMATR-I2C OPERATING CHARACTERISTICS: Valid through the full range of T_A, V_{CC} = V_{CC}(nom), R_{EXT} = 10 kΩ, unless otherwise specified

Characteristic	Symbol	Test Conditions	Min.	Typ.	Max.	Unit
I²C INTERFACE CHARACTERISTICS [1]						
Bus Free Time Between Stop and Start	t_{BUF}		1.3	–	–	µs
Hold Time Start Condition	t_{hdSTA}		0.6	–	–	µs
Setup Time for Repeated Start Condition	t_{suSTA}		0.6	–	–	µs
SCL Low Time	t_{LOW}		1.3	–	–	µs
SCL High Time	t_{HIGH}		0.6	–	–	µs
Data Setup Time	t_{suDAT}		100	–	–	µs
Data Hold Time	t_{hdDAT}		0	–	900	µs
Setup Time for Stop Condition	t_{suSTO}		0.6	–	–	µs
Logic Input Low Level (SDA, SCL pins)	V_L		–	–	30	%V_{CC}
Logic Input High Level (SDA, SCL pins)	V_{IH}		70	_	–	%V_{CC}
Logic Input Current	I_N	Input voltage on SDA or SCL = 0 V to V_{CC}	–1	_	1	µA
Output Low Voltage (SDA)	V_{OL}	SDA sinking = 1.5 mA	–	_	0.36	V
Clock Frequency (SCL pin)	f_{CLK}		–	_	400	kHz
Output Fall Time (SDA pin)	t_f	R_{EXT} = 2.4 kΩ, C_B = 100 pF	–	_	250	ns
I²C Pull-Up Resistance	R_{EXT}		2.4	10	–	kΩ
Total Capacitive Load for Each of SDA and SCL Buses	C_B		–	–	20	pF

[1] These values are ratiometric to the supply voltage, I²C Interface Characteristics are ensured by design and not factory tested.

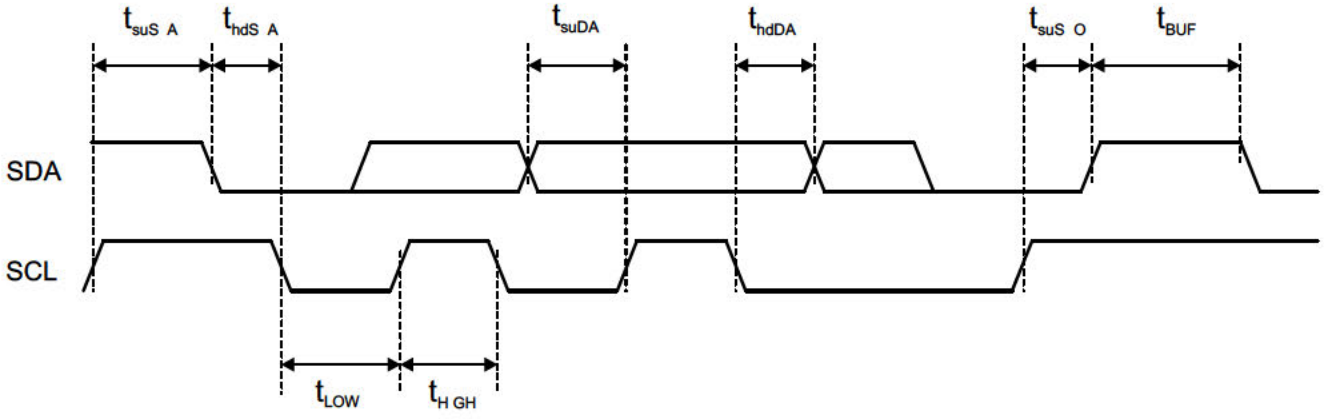

Figure 2: I²C Interface Timing

xKMATR-SPI OPERATING CHARACTERISTICS: Valid through the full range of T_A, V_{CC} = V_{CC}(nom), unless otherwise specified

Characteristic	Symbol	Test Conditions	Min.	Typ.	Max.	Unit
SPI INTERFACE CHARACTERISTICS						
Digital Input High Voltage	V_{IH}	MOSI, SCLK, CS pins, V_{CC} (nom) = 3.3 V	2.8	–	3.63	V
		MOSI, SCLK, CS pins, V_{CC} (nom) = 5 V	4	–	5.5	V
Digital Input Low Voltage	V_L	MOSI, SCLK, CS pins	–	–	0.5	V
SPI Output High Voltage	V_{OH}	MISO pin, C_L = 20 pF, T_A = 25°C, V_{CC} (nom) = 3.3 V	2.8	3.3	3.8	V
		MISO pin, C_L = 20 pF, T_A = 25°C, V_{CC} (nom) = 5 V	4	5	5.5	V
SPI Output Low Voltage	V_{OL}	MISO pin, C_L = 20 pF, T_A = 25°C	–	0.3	0.5	V
SPI Clock Frequency	f_{SCLK}	MISO pin, C_L = 20 pF	0.1	–	10	MHz
SPI Frame Rate	t_{SPI}		5.8	–	588	kHz
Chip Select to First SCLK Edge	t_{CS}	Time from CS going low to SCLK falling edge	50	–	–	ns
Data Output Valid Time	t_{DAV}	Data output valid after SCLK falling edge	–	40	–	ns
MOSI Setup Time	t_{SU}	Input setup time before SCLK rising edge	25	–	–	ns
MOSI Hold Time	t_{HD}	Input hold time after SCLK rising edge	50	–	–	ns
SCLK to CS Hold Time	t_{CHD}	Hold SCLK high time before CS rising edge	5	–	–	ns
Load Capacitance	C_L	Loading on digital output (MISO) pin	–	–	20	pF

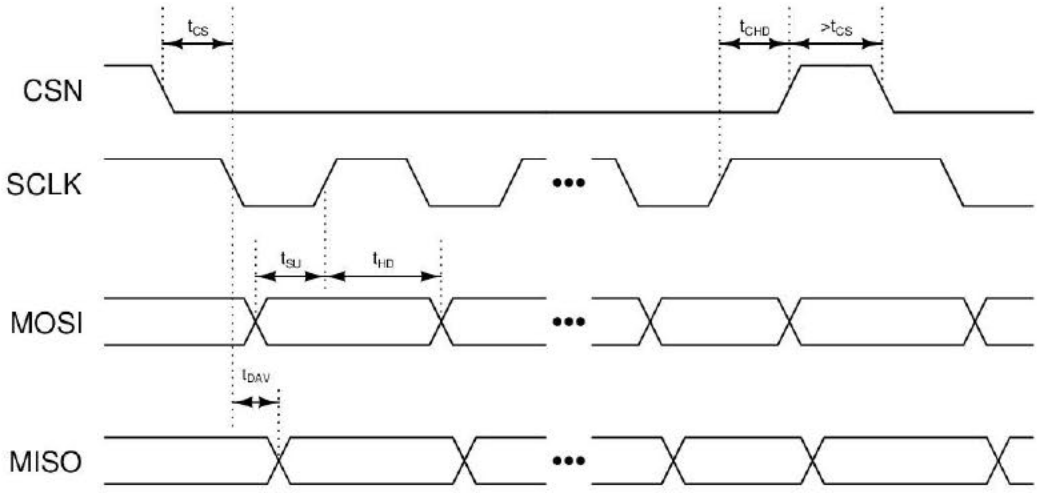

Figure 3: SPI Timing

ACS71020KMA-015B5 PERFORMANCE CHARACTERISTICS: Valid through the full operating temperature range, T_A = –40°C to 125°C, C_{BYPASS} = 0.1 µF, and V_{CC} = 5 V, unless otherwise specified

Characteristic	Symbol	Test Conditions	Min.	Typ. [1]	Max.	Unit
GENERAL CHARACTERISTICS						
Nominal Supply Voltage	V_{CC} (nom)		–	5	–	V
NOMINAL PERFORMANCE – CURRENT CHANNEL						
Current Sensing Range	I_{PR}		–15	–	15	A
Sensitivity	$Sens_{(I)}$	I_{PR} (min) < I_P < I_{PR} (max)	–	2184	–	LSB/A
ACCURACY PERFORMANCE – CURRENT CHANNEL						
Total Output Error	$E_{TOT(I)}$	Measured at I_P = I_{PR} (max), T_A = 25°C to 125°C	–	±2	–	%
		Measured at I_P = I_{PR} (max), T_A = –40°C to 25°C	–	±3	–	%
TOTAL OUTPUT ERROR COMPONENTS – CURRENT CHANNEL						
Sensitivity Error	$E_{SENS(I)}$	Measured at I_P = I_{PR} (max), T_A = 25°C to 125°C	–	±1	–	%
		Measured at I_P = I_{PR} (max), T_A = –40°C to 25°C	–	±1.5	–	%
Offset Error	$E_{O(I)}$	I_P = 0 A, T_A = 25°C to 125°C	–	±300	–	LSB
		I_P = 0 A, T_A = –40°C to 25°C	–	±500	–	LSB
NOMINAL PERFORMANCE – VOLTAGE CHANNEL						
Sensitivity	$Sens_{(V)}$	V_{PR} (min) < V_P < V_{PR} (max)	–	238	–	LSB/mV
ACCURACY PERFORMANCE – VOLTAGE CHANNEL						
Total Output Error	$E_{TOT(V)}$	Measured at V_P = V_{PR} (max), T_A = 25°C to 125°C	–	±1.2	–	%
		Measured at V_P = V_{PR} (max), T_A = –40°C to 25°C	–	±1.3	–	%
TOTAL OUTPUT ERROR COMPONENTS – VOLTAGE CHANNEL						
Sensitivity Error	$E_{SENS(V)}$	Measured at V_P = V_{PR} (max), T_A = 25°C to 125°C	–	±1	–	%
		Measured at V_P = V_{PR} (max), T_A = –40°C to 25°C	–	±1	–	%
Offset Error	$E_{O(V)}$	V_P = 0 mV, T_A = 25°C to 125°C	–	±100	–	LSB
		V_P = 0 mV, T_A = –40°C to 25°C	–	±150	–	LSB
ACCURACY PERFORMANCE – ACTIVE POWER						
Total Output Error	$E_{TOT(P)}$	Measured at V_P = V_{PR} (max), T_A = 25°C to 125°C	–	±2.3	–	%
		Measured at V_P = V_{PR} (max), T_A = –40°C to 25°C	–	±3.3	–	%

[1] Typical values are based on mean ±3 sigma.

ACS71020KMA-030B3 PERFORMANCE CHARACTERISTICS: Valid through the full operating temperature range, T_A = –40°C to 125°C, C_{BYPASS} = 0.1 µF, and V_{CC} = 3.3 V, unless otherwise specified

Characteristic	Symbol	Test Conditions	Min.	Typ. [1]	Max.	Unit
GENERAL CHARACTERISTICS						
Nominal Supply Voltage	V_{CC} (nom)		–	3.3	–	V
NOMINAL PERFORMANCE – CURRENT CHANNEL						
Current Sensing Range	I_{PR}		–30	–	30	A
Sensitivity	$Sens_{(I)}$	I_{PR} (min) < I_P < I_{PR} (max)	–	1092	–	LSB/A
ACCURACY PERFORMANCE – CURRENT CHANNEL						
Total Output Error	$E_{TOT(I)}$	Measured at I_P = I_{PR} (max), T_A = 25°C to 125°C	–	±2	–	%
		Measured at I_P = I_{PR} (max), T_A = –40°C to 25°C	–	±3	–	%
TOTAL OUTPUT ERROR COMPONENTS – CURRENT CHANNEL						
Sensitivity Error	$E_{SENS(I)}$	Measured at I_P = I_{PR} (max), T_A = 25°C to 125°C	–	±1	–	%
		Measured at I_P = I_{PR} (max), T_A = –40°C to 25°C	–	±1.5	–	%
Offset Error	$E_{O(I)}$	I_P = 0 A, T_A = 25°C to 125°C	–	±500	–	LSB
		I_P = 0 A, T_A = –40°C to 25°C	–	±700	–	LSB
NOMINAL PERFORMANCE – VOLTAGE CHANNEL						
Sensitivity	$Sens_{(V)}$	V_{PR} (min) < V_P < V_{PR} (max)	–	238	–	LSB/mV
ACCURACY PERFORMANCE – VOLTAGE CHANNEL						
Total Output Error	$E_{TOT(V)}$	Measured at V_P = V_{PR} (max), T_A = 25°C to 125°C	–	±1.2	–	%
		Measured at V_P = V_{PR} (max), T_A = –40°C to 25°C	–	±1.3	–	%
TOTAL OUTPUT ERROR COMPONENTS – VOLTAGE CHANNEL						
Sensitivity Error	$E_{SENS(V)}$	Measured at V_P = V_{PR} (max), T_A = 25°C to 125°C	–	±1	–	%
		Measured at V_P = V_{PR} (max), T_A = –40°C to 25°C	–	±1	–	%
Offset Error	$E_{O(V)}$	V_P = 0 mV, T_A = 25°C to 125°C	–	±60	–	LSB
		V_P = 0 mV, T_A = –40°C to 25°C	–	±80	–	LSB
ACCURACY PERFORMANCE – ACTIVE POWER						
Total Output Error	$E_{TOT(P)}$	Measured at V_P = V_{PR} (max), T_A = 25°C to 125°C	–	±2.3	–	%
		Measured at V_P = V_{PR} (max), T_A = –40°C to 25°C	–	±3.3	–	%

[1] Typical values are based on mean ±3 sigma.

ACS71020KMA-090B3 PERFORMANCE CHARACTERISTICS: Valid through the full operating temperature range, T_A = –40°C to 125°C, C_{BYPASS} = 0.1 µF, and V_{CC} = 3.3 V, unless otherwise specified

Characteristic	Symbol	Test Conditions	Min.	Typ. [1]	Max.	Unit
GENERAL CHARACTERISTICS						
Nominal Supply Voltage	V_{CC} (nom)		–	3.3	–	V
NOMINAL PERFORMANCE – CURRENT CHANNEL						
Current Sensing Range	I_{PR}		–90	–	90	A
Sensitivity	$Sens_{(I)}$	I_{PR} (min) < I_P < I_{PR} (max)	–	364	–	LSB/A
ACCURACY PERFORMANCE – CURRENT CHANNEL						
Total Output Error	$E_{TOT(I)}$	Measured at I_P = I_{PR} (max), T_A = 25°C to 125°C	–	±2	–	%
		Measured at I_P = I_{PR} (max), T_A = –40°C to 25°C	–	±3	–	%
TOTAL OUTPUT ERROR COMPONENTS – CURRENT CHANNEL						
Sensitivity Error	$E_{SENS(I)}$	Measured at I_P = I_{PR} (max), T_A = 25°C to 125°C	–	±1	–	%
		Measured at I_P = I_{PR} (max), T_A = –40°C to 25°C	–	±1.5	–	%
Offset Error	$E_{O(I)}$	I_P = 0 A, T_A = 25°C to 125°C	–	±300	–	LSB
		I_P = 0 A, T_A = –40°C to 25°C	–	±500	–	LSB
NOMINAL PERFORMANCE – VOLTAGE CHANNEL						
Sensitivity	$Sens_{(V)}$	V_{PR} (min) < V_P < V_{PR} (max)	–	238	–	LSB/mV
ACCURACY PERFORMANCE – VOLTAGE CHANNEL						
Total Output Error	$E_{TOT(V)}$	Measured at V_P = V_{PR} (max), T_A = 25°C to 125°C	–	±1.2	–	%
		Measured at V_P = V_{PR} (max), T_A = –40°C to 25°C	–	±1.3	–	%
TOTAL OUTPUT ERROR COMPONENTS – VOLTAGE CHANNEL						
Sensitivity Error	$E_{SENS(V)}$	Measured at V_P = V_{PR} (max), T_A = 25°C to 125°C	–	±1	–	%
		Measured at V_P = V_{PR} (max), T_A = –40°C to 25°C	–	±1	–	%
Offset Error	$E_{O(V)}$	V_P = 0 mV, T_A = 25°C to 125°C	–	±100	–	LSB
		V_P = 0 mV, T_A = –40°C to 25°C	–	±150	–	LSB
ACCURACY PERFORMANCE – ACTIVE POWER						
Total Output Error	$E_{TOT(P)}$	Measured at V_P = V_{PR} (max), T_A = 25°C to 125°C	–	±2.3	–	%
		Measured at V_P = V_{PR} (max), T_A = –40°C to 25°C	–	±3.3	–	%

[1] Typical values are based on mean ±3 sigma.

DATA ACQUISITION

ADCs

Both the Current and Voltage channels are sampled at a high frequency and then digitally filtered and decimated to avoid large anti-aliasing filters. The final sample rate will be near 32 kHz for an 8 MHz clock. The digital low-pass filters are EEPROM programmable and have a cutoff from 1 to 8 kHz. The digital word from the ADC is 16 bits for both the current and the voltage.

Raw Signal Sensitivity and Offset Trim

The gain and offset for both current and voltage channels use a shared temperature compensation engine which is trimmed in production. The fine sensitivity and offset are also trimmed in production at the factory; however, the user has access to the fine sensitivity field for the current channel should they want to trim the gain in application.

Phase Compensation

Phase delay may be introduced on either the voltage or current channels. The range is EEPROM selectable, either 5° of delay (step size of 0.67°) or 40° of delay (step size of 5.36°).

Zero Crossing

The zero crossings are only detected on the voltage signal. Both the high-to-low and low-to-high transitions will be detected with time-based hysteresis that removes the possibility of noise causing multiple zero crossings to be reported at each true zero crossing.

The zero crossing output can be a square wave that transitions at each zero crossing or a pulse with a fixed width at each zero crossing. When in pulse mode, the width of the pulse is t_P (see delaycnt_sel; nominal setting is 32 µs). There will be a fixed delay, t_D, from the time that a true zero crossing has occurred to the time that it is reported. This delay helps to keep the zero crossing detection more precise.

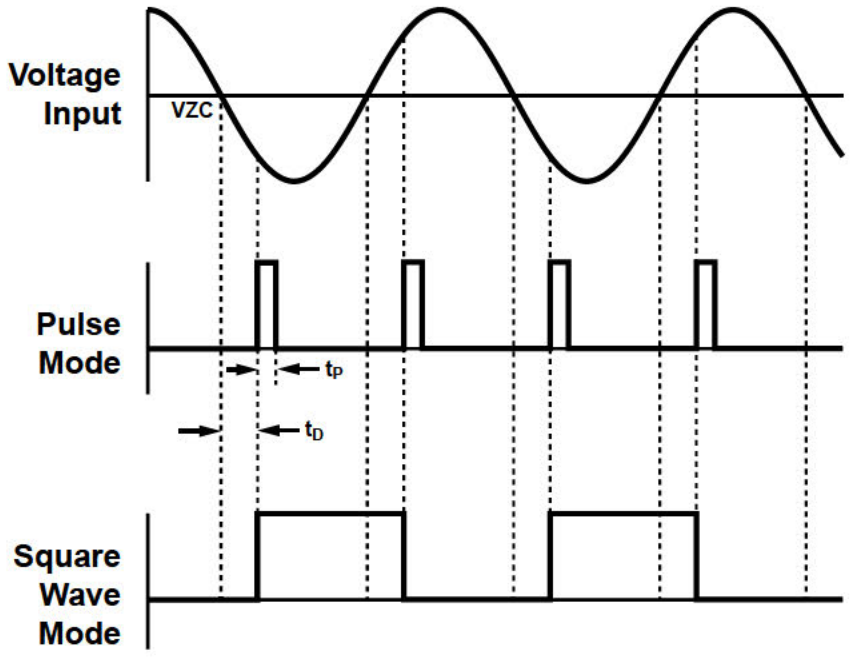

Figure 4: Zero Crossing

POWER CALCULATIONS

I_{RMS} / V_{RMS}

Cycle by cycle calculation of the root mean square of both the current and voltage channels:

$$I_{RMS} = \sqrt{\frac{\sum_{n=0}^{n=N-1} I_n^2}{N}} \qquad V_{RMS} = \sqrt{\frac{\sum_{n=0}^{n=N-1} V_n^2}{N}}$$

where I_n (Icodes) and V_n (Vcodes) are the instantaneous measurements of current and voltage, respectively.

Apparent Power

The magnitude of the complex power being measured; calculated at the end of each cycle:

$$|S| = I_{RMS} \times V_{RMS}$$

Active Power

The real component of power being measured; calculated cycle by cycle:

$$P_{ACTIVE} = \frac{\sum_{n=0}^{n=N-1} P_n}{N} \qquad P_n = I_n \times V_n$$

Reactive Power

Imaginary component of power being measured; calculated at the end of each cycle:

$$Q = \sqrt{S^2 - P_{ACTIVE}^{\ 2}}$$

Power Factor

The magnitude of the ratio of real power to apparent power; calculated at the end of each cycle:

$$|PF| = \frac{P_{ACTIVE}}{|S|}$$

Lead/Lag

The voltage leading or lagging the current will be communicated as a single bit. This bit also represents the sign of the Reactive Power.

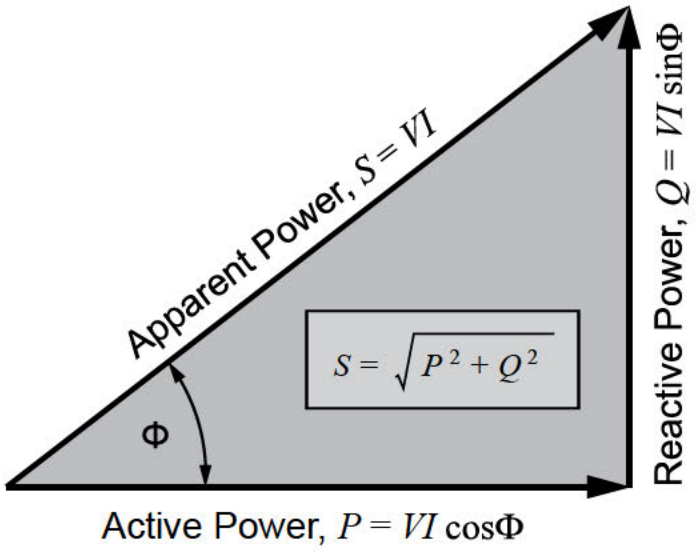

Figure 5: Power Triangle

Overcurrent Fault

The overcurrent fault threshold may be set from 50% to 175% of I_P. The user sets the trip point with an 8-bit word. The user also has the ability to set the trip level digital delay. This allows for up to a 32 µs delay on the Fault.

Averaging Over Time

IRMS or VRMS and PACTIVE may be averaged over a programmable number of updates. Note that either VMRS and IRMS can be averaged, not both.

The number of averages is controlled by two different registers. There is an accumulator that averages the above values. A 7-bit number, rms_avg_1, is used to determine the number of averages. There is an additional accumulator that will be used to average the output of the first accumulator. There is a 10-bit number, rms_avg_2, that will be used to determine the number of averages for this accumulator. The combination of the two accumulator allows the user to select how long to average for as well as how often the values are updated. The exact time this averages over depends on n (the number of samples per cycle). Averages could be read in Reg 0x26 to 0x29.

Over/Undervoltage Detection

There are two flags that can be used to detect undervoltage and overvoltage. These flags have a programmable voltage trip level. Refer to the Digital I/O section for all possible configurations.

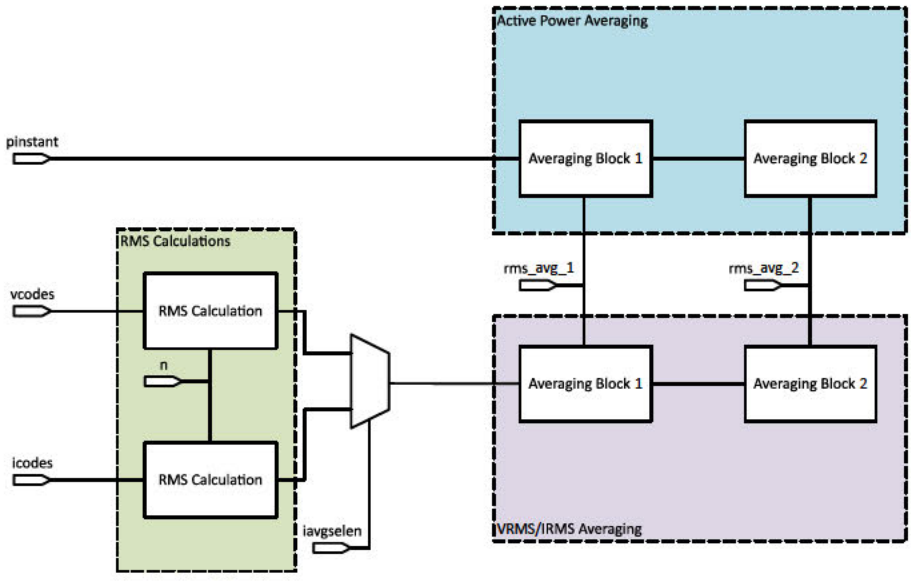

Figure 6: ACS71020 Trim Diagram

DIGITAL COMMUNICATION

Communication Interfaces

The ACS71020 supports communication over 1 MHz I²C and 10 MHz SPI. However, the communication protocol is fixed during factory programming. Refer to the Selection Guide for more information.

SPI

The SPI frame consists of:

- The Master writes on the MOSI line the 7-bit address of the register to be read from or written to.
- The next bit on the MOSI line is the read/write (RW) indicator. A high state indicates a Read and a low state indicates a Write.
- The device sends a 32-bit response on the MISO line. The contents correspond to the previous command.
- On the MOSI line, if the current command is a write, the 32 bits correspond to the Write data, and in the case of a read, the data is ignored.

Registers and EEPROM

WRITE ACCESS

The ACS71020 supports factory and customer EEPROM space as well as volatile registers. The customer access code must be sent prior to writing these customer EEPROM spaces. In addition, the device includes a set of free space EEPROM registers that are accessible with or without writing the access code.

READ ACCESS

All EEPROM and volatile registers may be read at any time regardless of the access code.

EEPROM

At power up all shadow registers are loaded from EEPROM including all configuration parameters. The shadow registers can be written to in order to change the device behavior without having to perform an EEPROM write. Any changes made it shadow memory are volatile and do not persist through a reset event.

WRITING

The Timing Diagram for an EEPROM write is shown in Figure 7 and Figure 8.

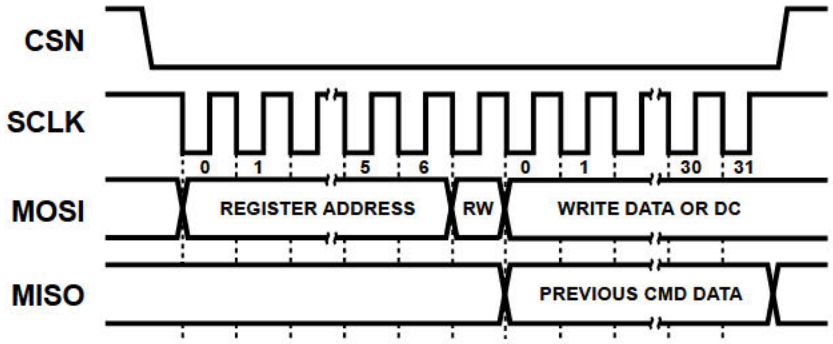

Figure 7: EEPROM Write – SPI Mode

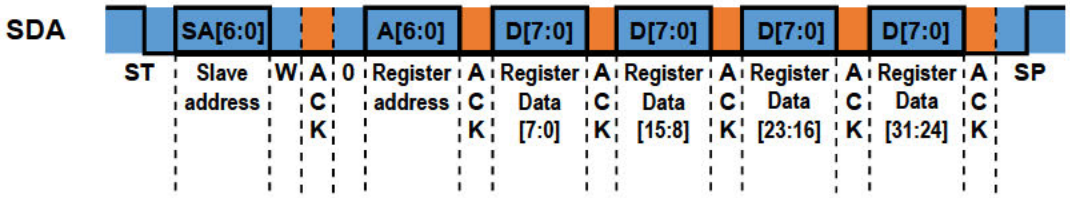

Figure 8: EEPROM Write – I²C Mode
Blue represents data sent by the master and orange is the data sent by the slave.

READING

The timing diagram for an EEPROM read is shown in Figure 9 and Figure 10.

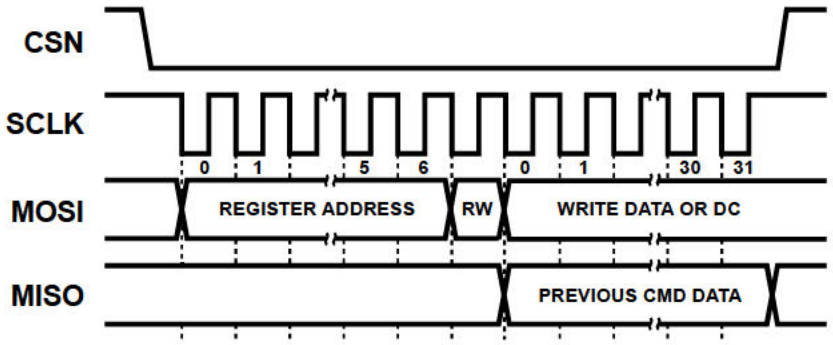

Figure 9: EEPROM Read – SPI Mode
For SPI, the read data will be sent out during the above command.

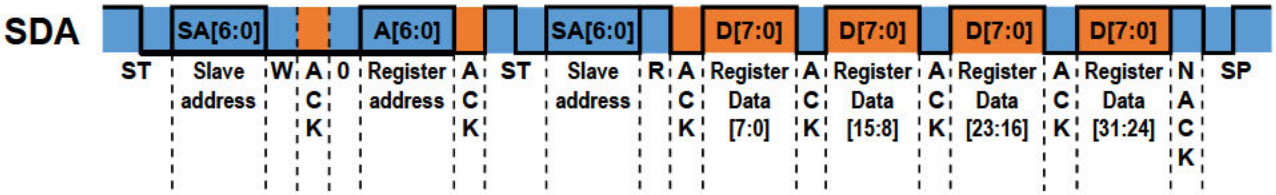

Figure 10: EEPROM Read – I²C Mode
Blue represents data sent by the master and orange is the data sent by the slave.

EEPROM Error Checking and Correction (ECC)

Hamming code methodology is implemented for EEPROM checking and correction (ECC). ECC is enabled after power-up.

The ACS71020 analyzes message data sent by the controller and the ECC bits are added. The first 6 bits sent from the device to the controller are dedicated to ECC. The device always returns 32 bits.

EEPROM ECC Errors

Bits	Name	Description
31:28	–	No meaning
27:26	ECC	00 = No Error 01 = Error detected and message corrected 10 = Uncorrectable error 11 = No meaning
25:0	D[25:0]	EEPROM data

MEMORY MAP

EEPROM/Shadow Memory

	Address	Bits																													
		31	30	29	28	27	26	25	24	23	22	21	20	19	18	17	16	15	14	13	12	11	10	9	8	7	6	5	4	3	2	1	0
EEPROM	0x0B	ECC										iavgselen	crs_sns			sns_fine									qvo_fine								
	0x0C	ECC						n													rms_avg_2										rms_avg_1		
	0x0D	ECC						squarewave_en	halfcycle_en	fltdly			fault									chan_del_sel				ichan_del_en					pacc_trim		
	0x0E	ECC											delaycnt_sel	undervreg					overvreg								bypass_n_en	vadc_rate_set			vevent_cycs		
	0x0F	ECC												dio_1_sel		dio_0_sel								i2c_dis_slv_addr									
Shadow	0x1B											iavgselen	crs_sns			sns_fine									qvo_fine								
	0x1C							n													rms_avg_2										rms_avg_1		
	0x1D							squarewave_en	halfcycle_en	fltdly			fault									unused	chan_del_sel		unused		ichan_del_en				pacc_trim		
	0x1E												delaycnt_sel	undervreg					overvreg								bypass_n_en	vadc_rate_set			vevent_cycs		
	0x1F													dio_1_sel		dio_0_sel								i2c_dis_slv_addr									

Device Trim Flow

The trim process for voltage, current, and power channels are depicted in Figure 11 through Figure 13. Refer to the "Register Details" Section for more information regarding trim fields.

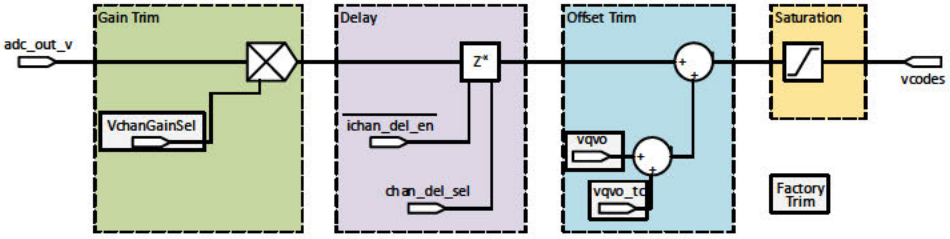

Figure 11: Voltage Channel Trim Flow

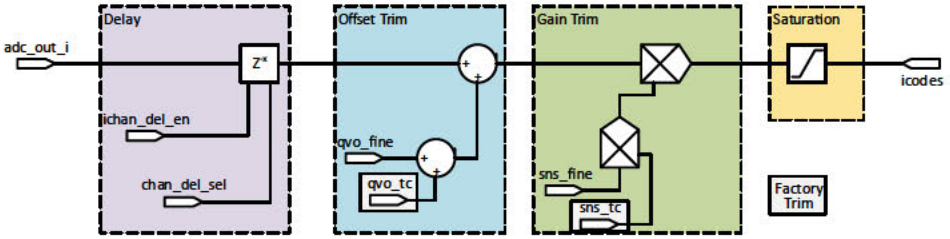

Figure 12: Current Channel Trim Flow

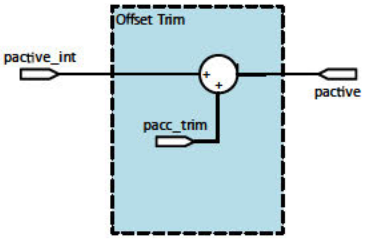

Figure 13: Power Channel Trim Flow

Register Details – EEPROM

Register 0x0B/0x1B

Bits	Name	Description
8:0	qvo_fine	Offset fine trimming on current channel
17:9	sns_fine	Fine gain trimming on the current channel
20:18	crs_sns	Coarse gain setting
21	iavgselen	Current Averaging selection
25:22	unused	Unused
31:26	ecc	Error Code Correction

qvo_fine

Offset adjustment for the current channel. This is a signed 9-bit number with an input range of –256 to 255. With a step size of 64 LSB, this equates to an offset trim range of –16384 to 16320 LSB, which is added to the icodes value. The trim is implemented as shown in Figure 12. The current channel's offset trim should be applied before the gain is trimmed. "qvo_fine" is further described in Table 1.

Table 1: qvo_fine

Range	Value	Units
–256 to 255	–16,384 to 16,320	LSB

sns_fine

Gain adjustment for the current channel. This is a signed 9-bit number with an input range of –256 to 255. This gain adjustment is implemented as a percentage multiplier centered around 1 (i.e. writing a 0 to this field multiplies the gain by 1, leaving the gain unaffected). The fine sensitivity parameter ranges from 50% to 150% of IP. The current channel's offset trim should be applied before the gain is trimmed. "sns_fine" is further described in Table 2.

Table 2: sns_fine

Range	Value	Units
–256 to 255	50 to 100	%

crs_sns

Coarse gain adjustment for the current channel. This gain is implemented in the analog domain before the ADC. This is a 3-bit number that allows for 8 gain selections. Adjustments to "crs_sns" may impact the device's performance over temperature. Datasheet limits apply only to the factory settings for "crs_sns". The gain settings map to 1×, 2×, 3×, 3.5×, 4×, 4.5×, 5.5×, and 8×. "crs_sns" is further described in Table 3.

Table 3: crs_sns

Range	Value	Units
0	1×	–
1	2×	–
2	3×	–
3	3.5×	–
4	4×	–
5	4.5×	–
6	5.5×	–
7	8×	–

iavgselen

Current Averaging selection enable. 0 will select vrms for averaging. 1 will select irms for averaging. See Figure 6.

Register 0x0C/0x1C

Bits	Name	Description
6:0	rms_avg_1	Average of the rms voltage or current – stage 1
16:7	rms_avg_2	Average of the rms voltage or current – stage 2
25:17	n	Number of samples per half period.
31:26	ecc	Error Code Correction

rms_avg_1

Number of averages for the first averaging stage (vrmsavgonesec or irmsavgonesec). The value written into this field directly maps to the number of averages ranging from 0 to 127. The channel to be averaged is selected by the "current average select enable" bit (iavgselen). "rms_avg_1" is further described in Table 4.

Table 4: rms_avg_1

Range	Value	Units
0 to 127	0 to 127	number of averages

rms_avg_2

Number of averages for the second averaging stage (vrmsavgonemin or irmsavgonemin). This stage averages the outputs of the first averaging stage. The value written into this field directly maps to the number of averages ranging from 0 to 1023. The channel to be averaged is selected by the "current average select enable" bit (iavgselen). "rms_avg_2" is further described in Table 5.

Table 5: rms_avg_2

Range	Value	Units
0 to 1023	0 to 1023	number of averages

n

This is the number of samples to be used in all rms calculations if the "bypass n enable" bit (bypass_n_en) is set. is set. If bypass_n_en is 0 (Reg 0x0E), then this field is unused. The value written into this field directly maps to the number of samples ranging from 0 to 511. "n" is further described in Table 6.

Table 6: n

Range	Value	Units
0 to 511	0 to 511	number of samples

Register 0x0D/0x1D

Bits	Name	Description
6:0	pacc_trim	Trims the active power
7	ichan_del_en	Enable phase delay on voltage or current channel
8	unused	unused
11:9	chan_del_sel	Sets phase delay on voltage or current channel
12	unused	unused
20:13	fault	Sets the overcurrent fault threshold
23:21	fltdly	Sets the overcurrent fault delay
24	halfcycle_en	Outputs pulses at every zero crossing when enabled, and every rising edge when disabled
25	squarewave_en	Selects pulse or square wave output for the zero crossing reporting
31:26	ecc	Error Code Correction

pacc_trim

Offset trim in the active power calculation, and is implemented as shown in Figure 13. This is a signed 7-bit number with an input range of –64 to 63. This equates to a trim range of –384 to 378 LSB, which is added to the "pactive" value. "pacc_trim" is further described in Table 7.

Table 7: pacc_trim

Range	Value	Units
–64 to 63	–384 to 378	LSB

ichan_del_en

Enables delay for either the voltage or current channel. Setting to 1 enables delay for the current channel. This behavior is depicted in Figure 11 and Figure 12. "ichan_del_en" is further described in Table 8.

Table 8: ichan_del_en

Range	Value	Units
0	0 – voltage channel	LSB
1	1 – current channel	LSB

chan_del_sel

Sets the amount of delay applied to the voltage or current channel (set by ichan_del_en). The step size of this field is determined by the value of vadc_rate_sel. "chan_del_sel" is further described in Table 9.

Table 9: chan_del_sel

vadc_rate_sel	Range	Value	Units
0	0 to 7	0 to 219	µs
1	0 to 7	0 to 875	µs

fault

Overcurrent fault threshold. This is an usigned 8-bit number with an input range of 0 to 255, which equates to a fault range of 50% to 175% of IP. The factory setting of this field is 0. "fault" is further described in Table 10.

Table 10: fault

Range	Value	Units
0 to 255	50 to 175	% of IP

fltdly

Fault delay setting of the amount of delay applied before flagging a fault condition. "fltdly" is further described in Table 11.

Table 11: fltdly

Range	Value	Units
0	0	µs
1	0	µs
2	4.75	µs
3	9.25	µs
4	13.75	µs
5	18.5	µs
6	23.25	µs
7	27.75	µs

halfcycle_en

Setting for the voltage zero-crossing detection. When set to 0, the voltage zero-crossing will be indicated on every rising edge. When set to 1, the voltage zero-crossing will be indicated on both rising and falling edges.

squarewave_en

Setting for the Voltage Zero-Crossing Detection. When set to 0, the zero-crossing event will be indicated by a pulse on the DIO pin. When set to 1, the zero-crossing event will be indicated by a level change on the DIO pin. Note that the device must be configured to report Voltage-Zero-Crossing detection on the DIO pin.

Register 0x0E/0x1E

Bits	Name	Description
5:0	vevent_cycs	Sets the number of qualifying cycles needed to flag overvoltage or undervoltage
6	vadc_rate_set	Sample Frequency Selection
7	bypass_n_en	When enabled, the dynamic cal bration of n is ignored and instead uses the programmed n value for computations
13:8	overvreg	Sets the overvoltage fault threshold
19:14	undervreg	Sets the undervoltage fault threshold
20	delaycnt_sel	Sets the width of the voltage zero-crossing output pulse
25:21	unused	Unused
31:26	ecc	Error Code Correction

vevent_cycs

Sets the number of cycles required to assert the OVRMS flag or the UVRMS. This is an unsigned 6-bit number with an input range of 0 to 63. The value in this field directly maps to the number of cycles. “vevent_cycs” is further described in Table 12.

Table 12: vevent_cycs

Range	Value	Units
0 to 63	1 to 64	cycles

vadc_rate_set

Sets the voltage ADC update rate. Setting this field to a 0 selects a 32 kHz update. Setting this field to a 1 selects an 8 kHz update, which will reduce the number of samples used in each rms calculation, but will allow for a larger phase delay correction between channels (see chan_del_sel). “vadc_rate_set” is further described in Table 13.

Table 13: vadc_rate_set

Range	Value	Units
0	32	kHz
1	8	kHz

bypass_n_en

When enabled, the dynamic calibration of n is ignored and instead uses the programmed n value for computations.

overvreg

Sets the threshold of the overvoltage rms flag (ovrms). This is a 6-bit number ranging from 0 to 63. This trip level spans the entire range of the vrms register. The flag is set if the rms value is above this threshold for the number of cycles selected in vevent_cycs. “overvreg” is further described in Table 14.

Table 14: overvreg

Range	Value	Units
0 to 63	0 to 32,768	LSB

undervreg

Sets the threshold of the undervoltage rms flag (uvrms). This is a 6-bit number ranging from 0 to 63. This trip level spans one entire range of the vrms register. The flag is set if the rms value is below this threshold for the number of cycles selected in vevent_cycs. “undervreg” is further described in Table 15.

Table 15: undervreg

Range	Value	Units
0 to 63	0 to 32,768	LSB

delaycnt_sel

Selection bit for the width of pulse for a voltage zero-crossing event. When set to 0, the pulse is 32 µs. When set to 1, the pulse is 256 µs. When the squarewave_en bit is set, this field is ignored. “delaycnt_sel” is further described in Table 16.

Table 16: delaycnt_sel

Range	Value	Units
0	32	µs
1	256	µs

Register 0x0F/0x1F

Bits	Name	Description
1:0	unused	Unused
8:2	i2c_slv_addr	I²C slave address selection
9	i2c_dis_slv_addr	Disable I²C slave address selection circuit
15:10	unused	Unused
17:16	dio_0_sel	Digital output 0 multiplexor selection bits
19:18	dio_1_sel	Digital output 1 multiplexor selection bits
25:20	unused	Unused
31:26	ecc	Error Code Correction

i2c_slv_addr

Settings for the I²C Slave Address. The Voltage on the DIO pins are measured at power and are used to set the device's slave address.

Each DIO pin has 4 voltage "bins" which may be used to set the I²C slave address. These voltages may be set using resistor divider circuits from VCC to Ground. "i2c_slv_addr" is further described in Table 17.

Table 17: i2c_slv_addr

DIO 1		DIO 0		A6	A5	A4	A3	A2	A1	A0	Slave Address (decimal)
0	0	0	0	1	1	0	0	0	0	0	96
0	0	0	1	1	1	0	0	0	0	1	97
0	0	1	0	1	1	0	0	0	1	0	98
0	0	1	1	1	1	0	0	0	1	1	99
0	1	0	0	1	1	0	0	1	0	0	100
0	1	0	1	1	1	0	0	1	0	1	101
0	1	1	0	1	1	0	0	1	1	0	102
0	1	1	1	1	1	0	0	1	1	1	103
1	0	0	0	1	1	0	1	0	0	0	104
1	0	0	1	1	1	0	1	0	0	1	105
1	0	1	0	1	1	0	1	0	1	0	106
1	0	1	1	1	1	0	1	0	1	1	107
1	1	0	0	1	1	0	1	1	0	0	108
1	1	0	1	1	1	0	1	1	0	1	109
1	1	1	0	1	1	0	1	1	1	0	110
1	1	1	1	EE	EE	EE	EE	EE	EE	EE	EEPROM value

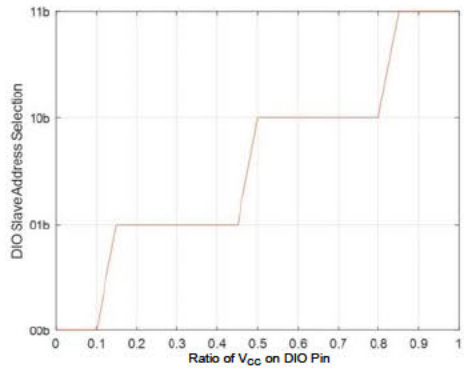

i2c_dis_slv_addr

Enables or disables the analog I²C slave address feature at power on. When this bit is set, the I²C slave address will map directly to i2c_slv_addr.

dio_0_sel

Determines which flags are output on the DIO0 pin. Only used when the device is in I²C programming mode. "dio_0_sel" is further described in Table 18.

Table 18: dio_0_sel

Value	Selection
0	VZC: Voltage zero crossing
1	OVRMS: The VRMS overvoltage flag
2	UVRMS: The VRMS undervoltage flag
3	The OR of OVRMS and UVRMS (if either flag is triggered, the DIO_0 pin will be asserted)

dio_1_sel

Determines which flags are output on the DIO1 pin. Only used when the device is in I²C programming mode. "dio_1_sel" is further described in Table 19.

Table 19: dio_1_sel

Value	Selection
0	OCF: Overcurrent fault
1	UVRMS: The VRMS undervoltage flag
2	OVRMS: The VRMS overvoltage flag
3	The OR of OVRMS, UVRMS, and OCF (if any of the three flags are triggered, the DIO_0 pin will be asserted).

Allegro MicroSystems, LLC
955 Perimeter Road
Manchester, NH 03103-3353 U.S.A.
www.allegromicro.com

Volatile Memory

	Address	Bits																													
		31	30	29	28	27	26	25	24	23	22	21	20	19	18	17	16	15	14	13	12	11	10	9	8	7	6	5	4	3	2	1	0
VOLATILE	0x20		irms																vrms														
	0x21																pactive																
	0x22																	papparent															
	0x23																pimag																
	0x24																						pfactor										
	0x25																								numptsout								
	0x26		irmsavgonesec																vrmsavgonesec														
	0x27		irmsavgonemin																vrmsavgonemin														
	0x28																pactavgonesec																
	0x29																pactavgonemin																
	0x2A																vcodes																
	0x2B																icodes																
	0x2C	pinstant																															
	0x2D																										pospf	posangle	undervoltage	overvoltage	faultlatched	faultout	vzerocrossout
	0x2E																																
	0x2F	access_code																															
	0x30																																customer_access
	0x31																																

Register Details – Volatile

Register 0x20

Bits	Name	Description
14:0	vrms	Voltage RMS value
30:16	irms	Current RMS value

vrms

RMS voltage output. This field is an unsigned 15-bit fixed point number with 15 fractional bits. It ranges from 0 to ~1 with a step size of $1/2^{15}$. This number should be multiplied by the overall full scale of the voltage path in order to get to volts. For example, the device is trimmed to a full scale input of 275 mV, and if a resistor divider network is used to create 275 mV when it has 250 V across it, then the multiplier should be 250 V. "vrms" is further described in Table 20.

Table 20: vrms

Range	Value	Units
0 to ~1	[0 to ~1] × $\Delta V_{IN(MAX)}$	V

irms

RMS current output. This field is an unsigned 15-bit fixed point number with 14 fractional bits. It ranges from 0 to ~2 with a step size of $1/2^{14}$. This number should be multiplied by the overall full scale of the current path in order to get to amps. For example, if the device is trimmed to a full scale input of 30 A, then the multiplier should be 30 A. "irms" is further described in Table 21.

Table 21: irms

Range	Value	Units
0 to ~2	[0 to ~2] × $I_{PR(MAX)}$	A

Register 0x21

Bits	Name	Description
16:0	pactive	Active power

pactive

Active power output. This field is a signed 17-bit fixed point number with 15 fractional bits. It ranges from -2 to ~2 with a step size of $1/2^{15}$. This number should be multiplied by the overall full-scale power in order to get to watts. For example, if full-scale voltage is 250 V and I_{PR} is 30 A, the multiplier will be 7500 W. "pactive" is further described in Table 22.

Table 22: pactive

Range	Value	Units
–2 to ~2	[–2 to ~2] × MaxPow	W

Register 0x22

Bits	Name	Description
15:0	papparent	Apparent power

papparent

Apparent power output. This field is an unsigned 16-bit fixed point number with 15 fractional bits. It ranges from 0 to ~2 with a step size of $1/2^{15}$. This number should be multiplied by the overall full-scale power in order to get to VA. For example, if full scale voltage is 250 V and I_{PR} is 30 A, then the multiplier will be 7500 VA. “papparent” is further described in Table 23.

Table 23: papparent

Range	Value	Units
0 to ~2	[0 to ~2] × MaxPow	VA

Register 0x23

Bits	Name	Description
16:0	pimag	Reactive power

pimag

Reactive power output. This field is an unsigned 17-bit fixed point number with 16 fractional bits. It ranges from 0 to ~2 with a step size of $1/2^{16}$. This number should be multiplied by the overall full-scale power in order to get to VAR. For example, if full-scale voltage is 250 V and I_{PR} is 30 A, then the multiplier will be 7500 VAR. “pimag” is further described in Table 24.

Table 24: pimag

Range	Value	Units
0 to ~2	[0 to ~2] × MaxPow	VAR

Register 0x24

Bits	Name	Description
10:0	pfactor	Power factor

pfactor

Power factor output. This field is an unsigned 9-bit fixed point number with 9 fractional bits. It ranges from 0 to ~1 with a step size of $1/2^9$. “pfactor” is further described in Table 25.

Table 25: pfactor

Range	Value	Units
0 to ~1	0 to ~1	–

Register 0x25

Bits	Name	Description
8:0	numptsout	Number of samples of current and voltage used for calculations

numptsout

Number of points used in the rms calculation. If bypass_n_en is not set, then this will be the dynamic value that is evaluated internal to the device based on zero crossings of the voltage channel. If bypass_n_en is set to 1, then this will be the same as the value in the n field. “numptsout” is further described in Table 26.

Table 26: numptsout

Range	Value	Units
0 to 255	0 to 255	–

Register 0x26

Bits	Name	Description
14:0	vrmsavgonesec	Averaged voltage RMS value – duration set by rms_avg_1 – This register will be zero if iavgselen = 1
30:16	irmsavgonesec	Averaged current RMS value – duration set by rms_avg_1 – This register will be zero if iavgselen = 0

vrmsavgonesec

Voltage RMS value averaged according to rms_avg_1. This register will be zero if iavgselen = 1.

irmsavgonesec

Current RMS value averaged according to rms_avg_1. This register will be zero if iavgselen = 0.

Register 0x27

Bits	Name	Description
14:0	vrmsavgonemin	Averaged voltage RMS value – duration set by rms_avg_2 – This register will be zero if iavgselen = 1
30:16	irmsavgonemin	Averaged current RMS value – duration set by rms_avg_2 – This register will be zero if iavgselen = 0

vrmsavgonemin

Voltage RMS value averaged according to rms_avg_2. This register will be zero if iavgselen = 1.

irmsavgonemin

Current RMS value averaged according to rms_avg_2. This register will be zero if iavgselen = 0.

Register 0x28

Bits	Name	Description
16:0	pactavgs	Active Power value averaged over up to one second — duration set by rms_avg_1

pactavgs

Active power value averaged according to rms_avg_1.

Register 0x29

Bits	Name	Description
16:0	pactavgm	Active Power value averaged over up to one minute — duration set by rms_avg_2

pactavgm

Active power value averaged according to rms_avg_2.

Register 0x2A

Bits	Name	Description
16:0	vcodes	Instantaneous voltage measurement

vcodes

This field contains the instantaneous voltage measurement before any rms calculations are done. It is a 17-bit signed fixed point number with 16 fractional bits. It ranges from –1 to ~1 with a step size of $1/2^{16}$. This number should be multiplied by the overall full scale of the voltage path in order to get volts. For example, the device is trimmed to a full-scale input of 275 mV, and if a resistor divider network is used to create 275 mV, when it has 250 V across it, then the multiplier should be 250 V. “vcodes” is further described in Table 27.

Table 27: vcodes

Range	Value	Units
–1 to ~1	[–1 to ~1] × $\Delta V_{IN(MAX)}$	V

Register 0x2B

Bits	Name	Description
16:0	icodes	Instantaneous current measurement

icodes

This field contains the instantaneous current measurement before any rms calculations are done. This field is a signed 17-bit fixed point number with 15 fractional bits. It ranges from –2 to ~2 with a step size of $1/2^{15}$. This number should be multiplied by the overall full scale of the current path in order to get amps. For example, the device is trimmed to a full-scale input of 30 A, then the multiplier should be 30 A. “icodes” is further described in Table 28.

Table 28: icodes

Range	Value	Units
–2 to ~2	[–2 to ~2] × $I_{PR(MAX)}$	A

Register 0x2C

Bits	Name	Description
31:0	pinstant	Instantaneous power – Multiplication of Vcodes and Icodes

pinstant

This field contains the instantaneous power measurement before any rms calculations are done. This field is a signed 32-bit fixed point number with 30 fractional bits. It ranges from –2 to ~2 with a step size of $1/2^{30}$. This number should be multiplied by the overall full-scale power in order to get to watts. For example, if full scale voltage is 250 V and I_{PR} is 30 A, then the multiplier will be 7500 W. “pinstant” is further described in Table 29.

Table 29: pinstant

Range	Value	Units
–2 to ~2	[-2 to ~2] × MaxPow	W

Register 0x2D

Bits	Name	Description
0	vzerocrossout	Voltage zero-crossing output
1	faultout	Current fault output
2	faultlatched	Current fault output latched
3	overvoltage	Overvoltage flag
4	undervoltage	Undervoltage flag
5	posangle	Sign of the power angle
6	pospf	Sign of the power factor

vzerocrossout

Flag for the voltage zero-crossing events. Will be present and active regardless of DIO_0_Sel and DIO_1_Sel. This flag will still follow the halfcycle_en and squarewave_en settings.

faultout

Flag for the overcurrent events. Will be present and active regardless of DIO_0_Sel and DIO_1_Sel. Will only be set when fault is present.

faultlatched

Flag for the overcurrent events. This bit will latch and will remain 1 as soon as an overcurrent event is detected. This can be reset by writing a 1 to this field. Will be present and active regardless of DIO settings.

overvoltage

Flag for the overvoltage events. Will be present and active regardless of DIO_0_Sel and DIO_1_Sel. Will only be set when fault is present.

undervoltage

Flag for the undervoltage events. Will be present and active regardless of DIO_0_Sel and DIO_1_Sel. Will only be set when fault is present.

posangle

Sign bit to represent if the power is being generated (1) or consumed (0).

pospf

Bit to represent leading or lagging. A 0 represents the voltage leading and a 1 represents the voltage lagging.

Register 0x2F

Bits	Name	Description
31:0	access_code	Access code register: Customer code: 0x4F70656E

Register 0x30

Bits	Name	Description
0	customer_access	Customer write access enabled. 0 = Non Customer mode. 1 = Customer mode.

APPLICATION CONNECTIONS

The two figures below show possible circuit configurations that can be used with the voltage channel of this device.

In Figure 14, an isolated device ground is required for proper operation.

In Figure 15, an isolated device ground is not required but the addition of R1 and R2 is required and they will create some offset on the measured signal. This offset will be ~1.4% of full scale on a 115 V system.

In both cases, R_{SENSE} should be sized such that the voltage across R_{SENSE} does not exceed the full-scale value of delta $V_{IN(max)}$.

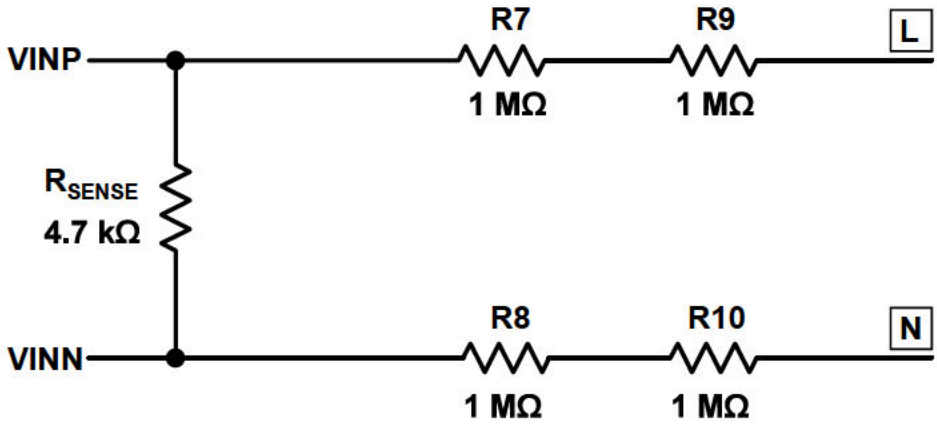

Figure 14: Isolated Device Ground Required

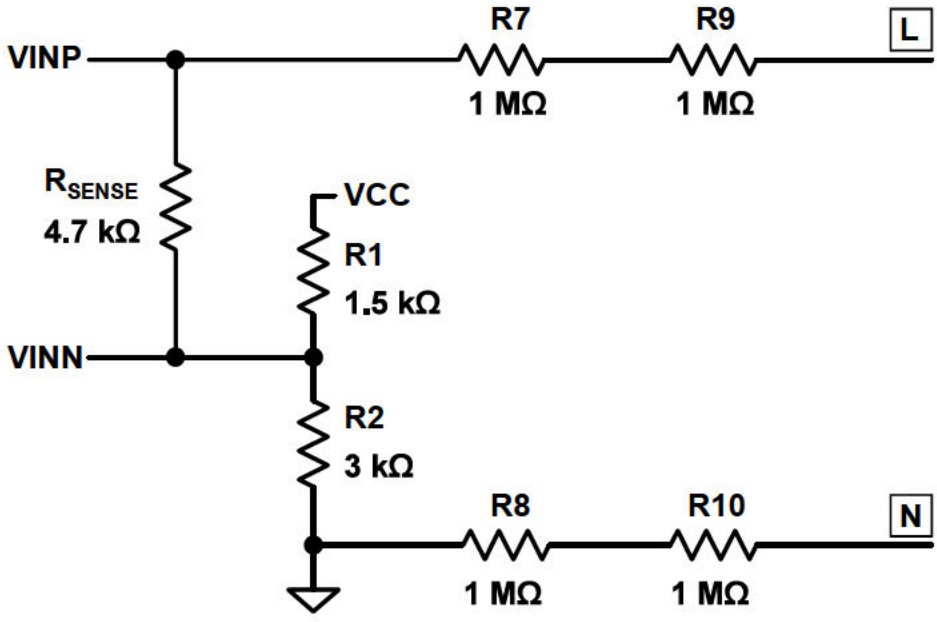

Figure 15: Isolated Device Ground Not Required

RECOMMENDED PCB LAYOUT

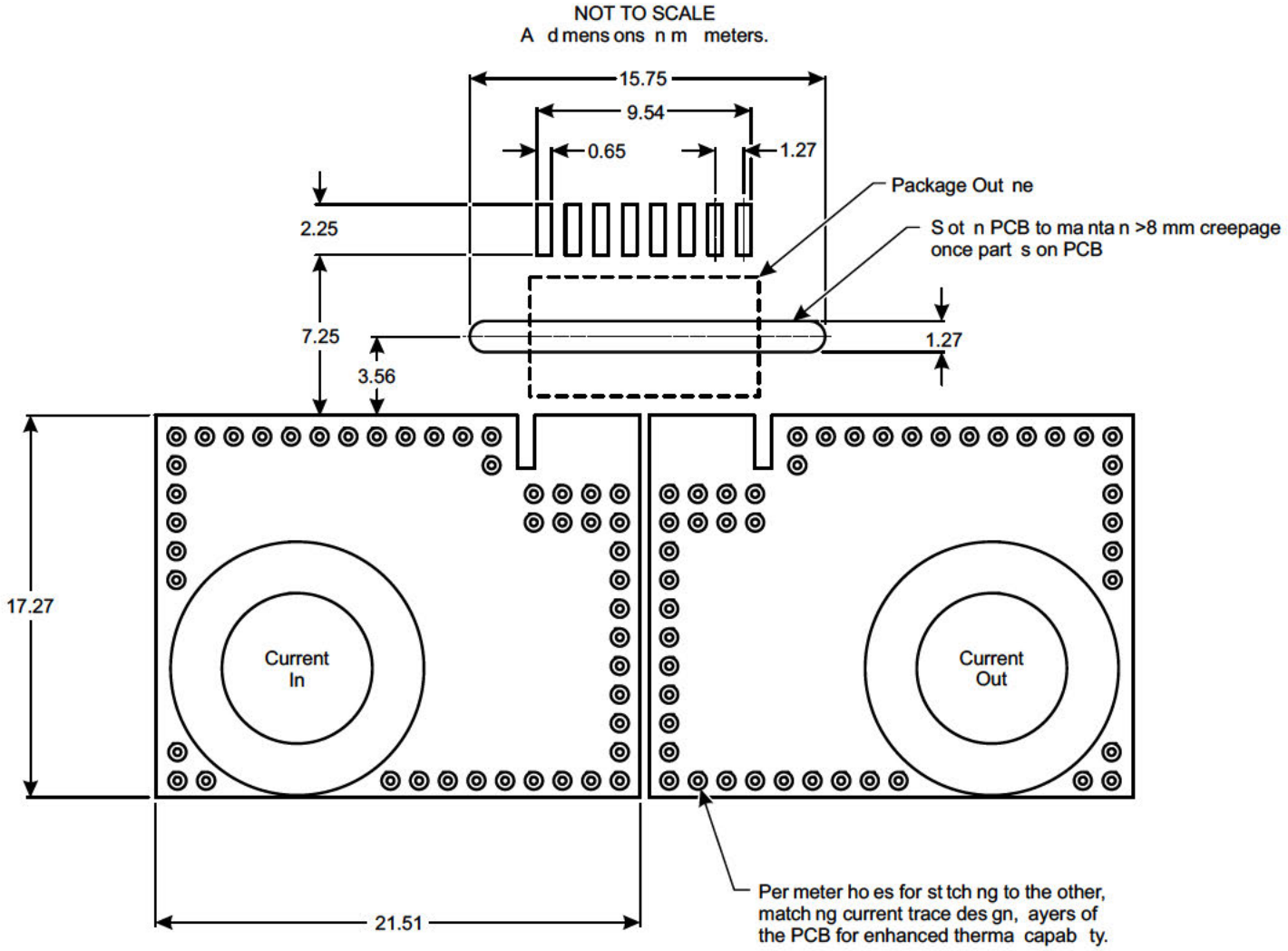

Figure 16: Recommended PCB Layout

PACKAGE OUTLINE DRAWING

For Reference Only – Not for Tooling Use

(Reference MS-013AA)
NOT TO SCALE
Dimensions in millimeters
Dimensions exclusive of mold flash, gate burrs, and dambar protrusions
Exact case and lead configuration at supplier discretion within limits shown

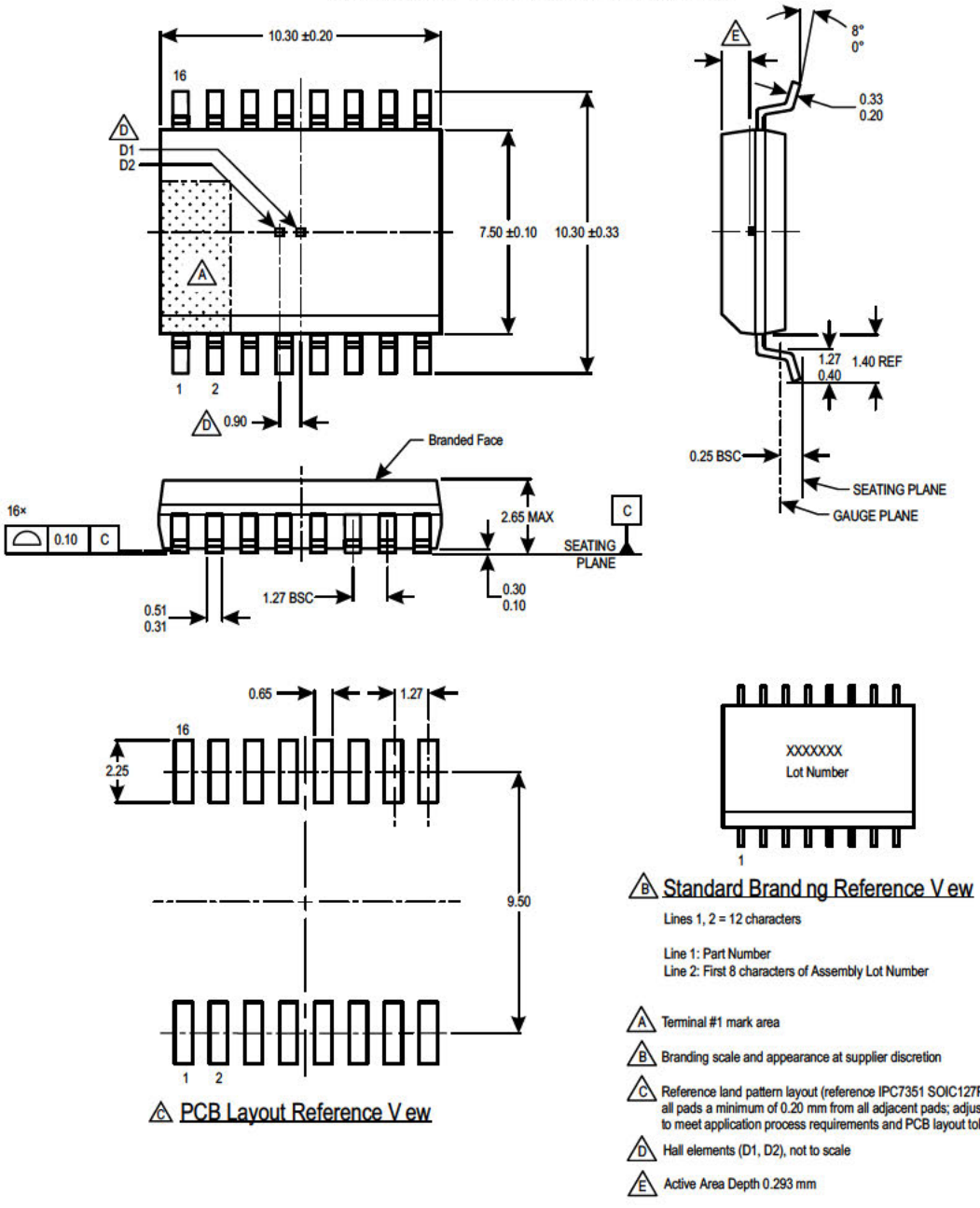

Figure 17: Package MA, 16-Pin SOICW

Revision History

Number	Date	Description
–	June 20, 2018	Initial release
1	September 19, 2018	Updated Features and Benefits, Description (page 1), Isolation Characteristics, Thermal Characteristics (page 3), Power Calculations section (pages 13-14), Digital Communication (page 15), Register Details (pages 20-33), Applications Connections (page 34), and Package Outline Drawing (page 36).
2	December 14, 2018	Updated certification

Copyright ©2018, Allegro MicroSystems, LLC

Allegro MicroSystems, LLC reserves the right to make, from time to time, such departures from the detail specifications as may be required to permit improvements in the performance, reliability, or manufacturability of its products. Before placing an order, the user is cautioned to verify that the information being relied upon is current.

Allegro's products are not to be used in any devices or systems, including but not limited to life support devices or systems, in which a failure of Allegro's product can reasonably be expected to cause bodily harm.

The information included herein is believed to be accurate and reliable. However, Allegro MicroSystems, LLC assumes no responsibility for its use; nor for any infringement of patents or other rights of third parties which may result from its use.

Copies of this document are considered uncontrolled documents.

For the latest version of this document, visit our website:

www.allegromicro.com

ENTEGRECİ

Bu belge www.entegreci.com üzerinden sunulmaktadır.

Elektronik komponent tedarikinde Entegreci

Entegreci, Eskişehir merkezli, Türkiye geneline satış yapan bir elektronik komponent mağazasıdır. Entegreler (IC), mikrodenetleyiciler, transistörler, diyotlar, pasif elemanlar, konnektörler, modüller ve geliştirme kartları tek adetten seri üretim adetlerine kadar satılır. Ürün sayfalarında güncel stok durumunu, fiyatı ve datasheet bağlantısını bulabilirsiniz.

Parça koduyla arama

Üretici parça numarasını yazın; stok ve fiyatı hemen görün.

www.entegreci.com

Ürün kategorileri

Entegreden kapasitöre tüm elektronik komponent kategorileri.

Kategorilere göz atın

Üreticiler

Aradığınız üreticinin ürünlerini tek sayfada inceleyin.

Üreticileri görün

Toplu alım ve teklif

Listede olmayan ya da yüksek adetli parçalar için teklif isteyin.

Teklif isteyin

www.entegreci.com | **destek@entegreci.com** | **0850 305 90 34**

Entegreci is an online electronic components store based in Türkiye. Search by manufacturer part number to see stock, prices and datasheets for integrated circuits, microcontrollers, transistors, passive components and connectors, or request a quote for parts that are not listed.

Bu sayfa Entegreci tarafından eklenmiştir. Belgenin önceki sayfaları asıl yayıncısına aittir ve içeriği değiştirilmemiştir; en güncel sürüm için belgenin yayıncısına başvurun.