DATA SHEET

For a complete data sheet, please also download:

- The IC06 74HC/HCT/HCU/HCMOS Logic Family Specifications
- The IC06 74HC/HCT/HCU/HCMOS Logic Package Information
- The IC06 74HC/HCT/HCU/HCMOS Logic Package Outlines

74HC/HCT393

Dual 4-bit binary ripple counter

Product specification
File under Integrated Circuits, IC06

December 1990

Philips Semiconductors

PHILIPS

Dual 4-bit binary ripple counter 74HC/HCT393

FEATURES

- Two 4-bit binary counters with individual clocks
- Divide-by any binary module up to 28 in one package
- Two master resets to clear each 4-bit counter individually
- Output capability: standard
- I_{CC} category: MSI

GENERAL DESCRIPTION

The 74HC/HCT393 are high-speed Si-gate CMOS devices and are pin compatible with low power Schottky TTL (LSTTL). They are specified in compliance with JEDEC standard no. 7A.

The 74HC/HCT393 are 4-bit binary ripple counters with separate clocks (1$\overline{CP}$ and 2 $\overline{CP}$) and master reset (1MR and 2MR) inputs to each counter. The operation of each half of the “393” is the same as the “93” except no external clock connections are required.
The counters are triggered by a HIGH-to-LOW transition of the clock inputs. The counter outputs are internally connected to provide clock inputs to succeeding stages. The outputs of the ripple counter do not change synchronously and should not be used for high-speed address decoding.

The master resets are active-HIGH asynchronous inputs to each 4-bit counter identified by the “1” and “2” in the pin description.
A HIGH level on the nMR input overrides the clock and sets the outputs LOW.

QUICK REFERENCE DATA

GND = 0 V; T_{amb} = 25 °C; $t_r = t_f$ = 6 ns

SYMBOL	PARAMETER	CONDITIONS	TYPICAL		UNIT
			HC	HCT	
t_{PHL}/ t_{PLH}	propagation delay	C_L = 15 pF; V_{CC} = 5 V			
	n$\overline{CP}$ to nQ_0		12	20	ns
	nQ to nQ_{n+1}		5	6	ns
	nMR to nQ_n		11	15	ns
f_{max}	maximum clock frequency		99	53	MHz
C_I	input capacitance		3.5	3.5	pF
C_{PD}	power dissipation capacitance per counter	notes 1 and 2	23	25	pF

Notes

1. C_{PD} is used to determine the dynamic power dissipation (P_D in μW):

   $P_D = C_{PD} \times V_{CC}^2 \times f_i + \sum (C_L \times V_{CC}^2 \times f_o)$ where:

   f_i = input frequency in MHz

   f_o = output frequency in MHz

   $\sum (C_L \times V_{CC}^2 \times f_o)$ = sum of outputs

   C_L = output load capacitance in pF

   V_{CC} = supply voltage in V

2. For HC the condition is V_I = GND to V_{CC}
   For HCT the condition is V_I = GND to V_{CC} – 1.5 V

ORDERING INFORMATION

See *“74HC/HCT/HCU/HCMOS Logic Package Information”*.

PIN DESCRIPTION

PIN NO.	SYMBOL	NAME AND FUNCTION
1, 13	$1\overline{CP}$, $2\overline{CP}$	clock inputs (HIGH-to-LOW, edge-triggered)
2, 12	1MR, 2MR	asynchronous master reset inputs (active HIGH)
3, 4, 5, 6, 11, 10, 9, 8	$1Q_0$ to $1Q_3$, $2Q_0$ to $2Q_3$	flip-flop outputs
7	GND	ground (0 V)
14	V_{CC}	positive supply voltage

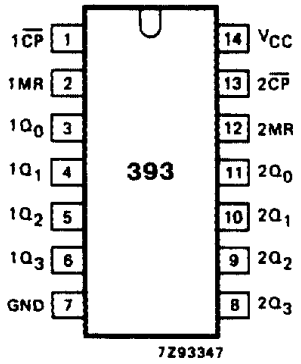

Fig.1 Pin configuration.

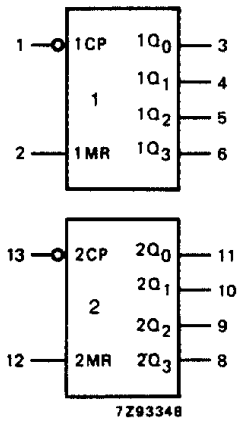

Fig.2 Logic symbol.

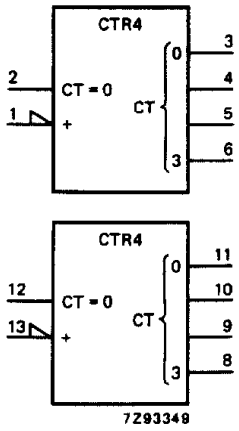

Fig.3 IEC logic symbol.

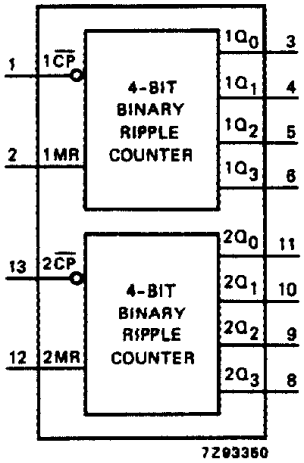

Fig.4 Functional diagram.

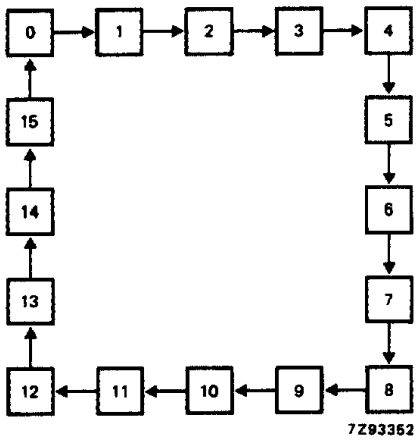

Fig.5 State diagram.

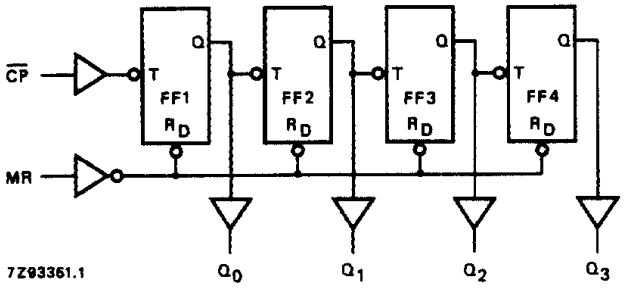

Fig.6 Logic diagram (one counter).

COUNT SEQUENCE FOR 1 COUNTER

COUNT	OUTPUTS			
	Q_0	Q_1	Q_2	Q_3
0	L	L	L	L
1	H	L	L	L
2	L	H	L	L
3	H	H	L	L
4	L	L	H	L
5	H	L	H	L
6	L	H	H	L
7	H	H	H	L
8	L	L	L	H
9	H	L	L	H
10	L	H	L	H
11	H	H	L	H
12	L	L	H	H
13	H	L	H	H
14	L	H	H	H
15	H	H	H	H

Notes

1. H = HIGH voltage level
   L = LOW voltage level

DC CHARACTERISTICS FOR 74HC

For the DC characteristics see *"74HC/HCT/HCU/HCMOS Logic Family Specifications"*.

Output capability: standard
I_{CC} category: MSI

AC CHARACTERISTICS FOR 74HC

GND = 0 V; $t_r = t_f$ = 6 ns; C_L = 50 pF

SYMBOL	PARAMETER	T_{amb} (°C)							UNIT	TEST CONDITIONS	
		74HC								V_{CC} (V)	WAVEFORMS
		+25			−40 to +85		−40 to +125				
		min.	typ.	max.	min.	max.	min.	max.			
t_{PHL}/ t_{PLH}	propagation delay $n\overline{CP}$ to nQ_0		41 15 12	125 25 21		155 31 26		190 38 32	ns	2.0 4.5 6.0	Fig.7
t_{PHL}/ t_{PLH}	propagation delay nQ_n to nQ_{n+1}		14 5 4	45 9 8		55 11 9		70 14 12	ns	2.0 4.5 6.0	Fig.7
t_{PHL}	propagation delay nMR to nQ_n		39 14 11	140 28 24		175 35 30		210 42 36	ns	2.0 4.5 6.0	Fig.8
t_{THL}/ t_{TLH}	output transition time		19 7 6	75 15 13		95 19 16		110 22 19	ns	2.0 4.5 6.0	Fig.7
t_W	clock pulse width HIGH or LOW	80 16 14	17 6 5		100 20 17		120 24 20		ns	2.0 4.5 6.0	Fig.7
t_W	master reset pulse width; HIGH	80 16 14	19 7 6		100 20 17		120 24 20		ns	2.0 4.5 6.0	Fig.8
t_{rem}	removal time nMR to $n\overline{CP}$	5 5 5	3 1 1		5 5 5		5 5 5		ns	2.0 4.5 6.0	Fig.8
f_{max}	maximum clock pulse frequency	6 30 35	30 90 107		5 24 28		4 20 24		MHz	2.0 4.5 6.0	Fig.7

DC CHARACTERISTICS FOR 74HCT

For the DC characteristics see *"74HC/HCT/HCU/HCMOS Logic Family Specifications"*.

Output capability: standard
I_{CC} category: MSI

Note to HCT types

The value of additional quiescent supply current (ΔI_{CC}) for a unit load of 1 is given in the family specifications. To determine ΔI_{CC} per input, multiply this value by the unit load coefficient shown in the table below.

INPUT	UNIT LOAD COEFFICIENT
$1\overline{CP}$	0.4
$2\overline{CP}$	0.4
1MR	1.0
2MR	1.0

AC CHARACTERISTICS FOR 74HCT

GND = 0 V; $t_r = t_f$ = 6 ns; C_L = 50 pF

SYMBOL	PARAMETER	T_{amb} (°C)							UNIT	TEST CONDITIONS	
		74HCT								V_{CC} (V)	WAVEFORMS
		+25			−40 to +85		−40 to +125				
		min.	typ.	max.	min.	max.	min.	max.			
t_{PHL}/ t_{PLH}	propagation delay $n\overline{CP}$ to nQ_0		15	25		31		38	ns	4.5	Fig.7
t_{PHL}/ t_{PLH}	propagation delay nQ_n to nQ_{n+1}		6	10		13		15	ns	4.5	Fig.7
t_{PHL}	propagation delay nMR to nQ_n		18	32		40		48	ns	4.5	Fig.8
t_{THL}/ t_{TLH}	output transition time		7	15		19		22	ns	4.5	Fig.7
t_W	clock pulse width HIGH or LOW	19	11		24		29		ns	4.5	Fig.7
t_W	master reset pulse width; HIGH	16	6		20		24		ns	4.5	Fig.8
t_{rem}	removal time nMR to $n\overline{CP}$	5	0		5		5		ns	4.5	Fig.8
f_{max}	maximum clock pulse frequency	27	48		22		18		MHz	4.5	Fig.7

AC WAVEFORMS

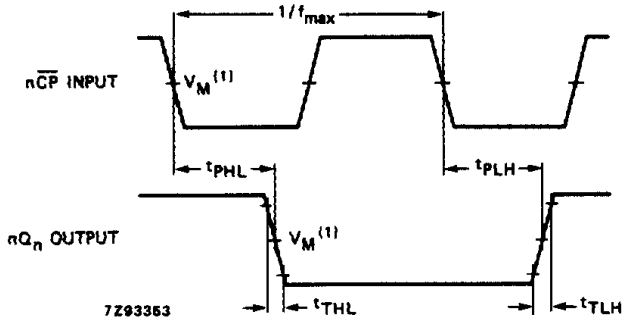

(1) HC : V_M = 50%; V_I = GND to V_{CC}.
HCT: V_M = 1.3 V; V_I = GND to 3 V.

Fig.7 Waveforms showing the clock ($n\overline{CP}$) to output ($1Q_n$, $2Q_n$) propagation delays, the clock pulse width, the output transition times and the maximum clock frequency.

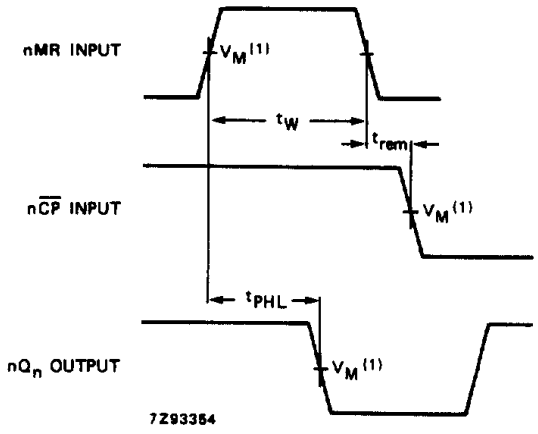

(1) HC : V_M = 50%; V_I = GND to V_{CC}.
HCT: V_M = 1.3 V; V_I = GND to 3 V.

Fig.8 Waveforms showing the master reset (nMR) pulse width, the master reset to output (Q_n) propagation delays and the master reset to clock ($n\overline{CP}$) removal time.

PACKAGE OUTLINES

See *"74HC/HCT/HCU/HCMOS Logic Package Outlines"*.

ENTEGRECİ

Bu belge www.entegreci.com üzerinden sunulmaktadır.

Elektronik komponent tedarikinde Entegreci

Entegreci, Eskişehir merkezli, Türkiye geneline satış yapan bir elektronik komponent mağazasıdır. Entegreler (IC), mikrodenetleyiciler, transistörler, diyotlar, pasif elemanlar, konnektörler, modüller ve geliştirme kartları tek adetten seri üretim adetlerine kadar satılır. Ürün sayfalarında güncel stok durumunu, fiyatı ve datasheet bağlantısını bulabilirsiniz.

Parça koduyla arama

Üretici parça numarasını yazın; stok ve fiyatı hemen görün.

www.entegreci.com

Ürün kategorileri

Entegreden kapasitöre tüm elektronik komponent kategorileri.

Kategorilere göz atın

Üreticiler

Aradığınız üreticinin ürünlerini tek sayfada inceleyin.

Üreticileri görün

Toplu alım ve teklif

Listede olmayan ya da yüksek adetli parçalar için teklif isteyin.

Teklif isteyin

www.entegreci.com | **destek@entegreci.com** | **0850 305 90 34**

Entegreci is an online electronic components store based in Türkiye. Search by manufacturer part number to see stock, prices and datasheets for integrated circuits, microcontrollers, transistors, passive components and connectors, or request a quote for parts that are not listed.

Bu sayfa Entegreci tarafından eklenmiştir. Belgenin önceki sayfaları asıl yayıncısına aittir ve içeriği değiştirilmemiştir; en güncel sürüm için belgenin yayıncısına başvurun.