MIP0221SY, MIP0222SY, MIP0223SY, MIP0224SY, MIP0225SY, MIP0226SY, MIP0227SY

Silicon MOS IC

■ Features

- Single chip IC with high breakdown voltage power MOS FET and CMOS control circuits
- Allowing to input worldwide mains (AC 85 to 274V)
- A pulse-by-pulse overcurrent protection circuit and a timer auto-restart circuit are integrated.

■ Applications

- Switching power supply (to 90W)
- AC adaptor
- Battery charger

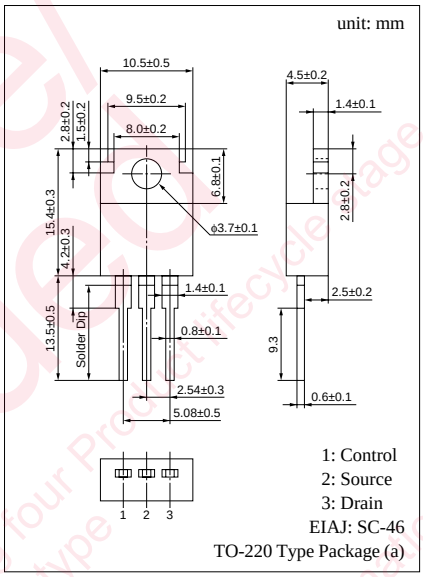

■ Absolute Maximum Ratings (Ta = 25 ± 3°C)

Parameter	Symbol	Ratings		Unit
Drain voltage	V_D	700		V
Control voltage	V_C	8		V
Output current	I_D	MIP0221SY	0.3	A
		MIP0222SY	0.585	
		MIP0223SY	1.15	
		MIP0224SY	1.72	
		MIP0225SY	2.4	
		MIP0226SY	2.9	
		MIP0227SY	3.5	
Control current	I_C	0.1		mA
Channel temperature	T_{ch}	150		°C
Storage temperature	T_{stg}	−55 to +150		°C

■ Block Diagram

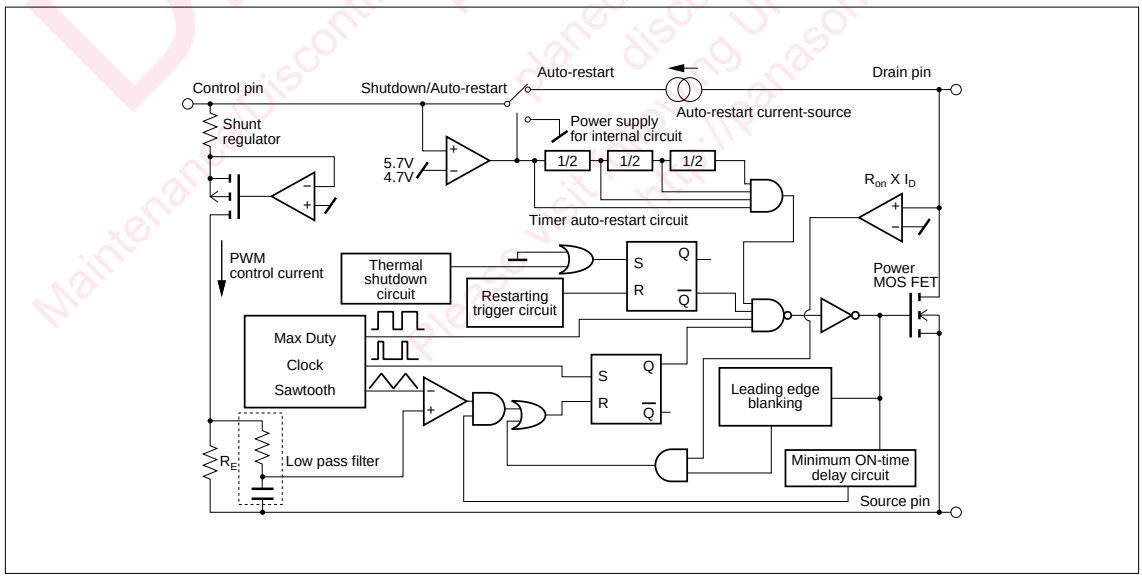

Maintenance/ Discontinued
Maintenance/discontinued continues following four Product Lifecycle stage: planned maintenance type maintenance type planned discontinued typed discontinued type
Please visit following URL about latest information. http://panasonic.net/sc/en

■ Electrical Characteristics (T_C = 25 ± 2°C)

	Parameter		Symbol	Conditions	min	typ	max	Unit
Control functions	Output frequency		f_{OSC}	I_C = 2mA	90	100	110	kHz
	Maximum duty cycle		MAXDC	I_C = 2mA	64	67	70	%
	Minimum duty cycle		MINDC	I_C = 10mA			3	%
Auto-restart	Control pin charging current		I_C	V_C = 0	–2.4	–1.9	–1.2	mA
				V_C = 5V	–2	–1.5	– 0.8	
	Auto-restart threshold voltage		$V_{C(on)}$		5	5.7	6.3	V
	Lockout threshold voltage		$V_{C(off)}$		4	4.7	5.3	V
	Auto-restart hysteresis voltage		ΔV_C		0.5	1	1.5	V
	Auto-restart duty cycle		T_{SW}/T_{TIM}			5	8	%
	Auto-restart frequency		f_{TIM}			1.2		Hz
Circuit protection	Self-protection current limit	MIP0221SY	I_{LIMIT}		0.23	0.25	9.28	A
		MIP0222SY			0.45	0.5	0.55	
		MIP0223SY			0.9	1	1.1	
		MIP0224SY			1.35	1.5	1.65	
		MIP0225SY			1.8	2	2.2	
		MIP0226SY			2.25	2.5	2.75	
		MIP0227SY			2.7	3	3.3	
	Leading edge blanking delay		$t_{on(BLK)}$	I_C = 3mA		0.25		µs
	Current limit delay		$t_{d(OCL)}$	I_C = 3mA		0.1		µs
	Thermal shutdown temperature		T_{OTP}	I_C = 3mA	130	140	150	°C
	Power-up reset threshold voltage		$V_{C\ reset}$		2.3	3.3	4.2	V
Output	ON-state resistance	MIP0221SY	$R_{DS(on)}$	I_D = 0.025A		31.2	36	Ω
		MIP0222SY		I_D = 0.1A		15	18	
		MIP0223SY		I_D = 0.2A		8.5	10	
		MIP0224SY		I_D = 0.3A		5.8	6.7	
		MIP0225SY		I_D = 0.3A		4	5	
		MIP0226SY		I_D = 0.3A		3.3	4	
		MIP0227SY		I_D = 0.3A		2.6	3	
	OFF-state current		I_{DSS}	V_{DS} = 650V, Output MOS FET disabled		0.01	0.25	mA
	Breakdown voltage		V_{DSS}	I_D = 0.25mA, Output MOS FET disabled	700			V
	Rise time		t_r			0.1	0.2	µs
	Fall time		t_f			0.1	0.2	µs
Power supply voltage	Drain supply voltage		$V_{D(MIN)}$		36			V
	Shunt regulator voltage		V_C	I_C = 3mA	5.4	5.7	6.1	V
	Control supply/discharge current		I_{CD1}	Output MOS FET enabled	0.7	1.4	1.8	mA
			I_{CD2}	Output MOS FET disabled	0.5	0.8	1.1	mA

Request for your special attention and precautions in using the technical information and semiconductors described in this book

(1) If any of the products or technical information described in this book is to be exported or provided to non-residents, the laws and regulations of the exporting country, especially, those with regard to security export control, must be observed.

(2) The technical information described in this book is intended only to show the main characteristics and application circuit examples of the products. No license is granted in and to any intellectual property right or other right owned by Panasonic Corporation or any other company. Therefore, no responsibility is assumed by our company as to the infringement upon any such right owned by any other company which may arise as a result of the use of technical information described in this book.

(3) The products described in this book are intended to be used for standard applications or general electronic equipment (such as office equipment, communications equipment, measuring instruments and household appliances).
Consult our sales staff in advance for information on the following applications:
- Special applications (such as for airplanes, aerospace, automobiles, traffic control equipment, combustion equipment, life support systems and safety devices) in which exceptional quality and reliability are required, or if the failure or malfunction of the products may directly jeopardize life or harm the human body.
- Any applications other than the standard applications intended.

(4) The products and product specifications described in this book are subject to change without notice for modification and/or improvement. At the final stage of your design, purchasing, or use of the products, therefore, ask for the most up-to-date Product Standards in advance to make sure that the latest specifications satisfy your requirements.

(5) When designing your equipment, comply with the range of absolute maximum rating and the guaranteed operating conditions (operating power supply voltage and operating environment etc.). Especially, please be careful not to exceed the range of absolute maximum rating on the transient state, such as power-on, power-off and mode-switching. Otherwise, we will not be liable for any defect which may arise later in your equipment.
Even when the products are used within the guaranteed values, take into the consideration of incidence of break down and failure mode, possible to occur to semiconductor products. Measures on the systems such as redundant design, arresting the spread of fire or preventing glitch are recommended in order to prevent physical injury, fire, social damages, for example, by using the products.

(6) Comply with the instructions for use in order to prevent breakdown and characteristics change due to external factors (ESD, EOS, thermal stress and mechanical stress) at the time of handling, mounting or at customer's process. When using products for which damp-proof packing is required, satisfy the conditions, such as shelf life and the elapsed time since first opening the packages.

(7) This book may be not reprinted or reproduced whether wholly or partially, without the prior written permission of our company.

Precautions on the Sales of IPDs

1) The sale and/or the export of IPD products to any customer or customers located in any country other than Japan is expressly prohibited by the Agreement made and executed by and between Power Integrations, Inc. and Panasonic Corporation.
2) IPD products purchased from our company, or its authorized agents, hereinafter referred to as our company, shall be used only for production purposes by those parties who have duly purchased IPD products. Those who have purchased IPD products shall not use such IPD products in unmodified form for re-sale, loan, or sample shipment for evaluation purposes to any other parties.
3) If a party who has duly purchased IPD products subcontracts its production to any other parties, including its subsidiaries or any other third parties inside and/or out of Japan, and the IPD products are consigned to such subcontracting parties thereat, such party is obligated to monitor and control the quantity of IPD products to prevent any of the aforementioned re-sale, loan or sample shipments from taking place.
4) In the event that any actual or threatened breach or violation of any of the above mentioned 1, 2, or 3, has occurred or is about to occur, our company will hold all shipments of IPD products and may request the party alleged to be responsible for such occurrence for necessary.
Note) The products of MIP50□, MIP51□, and MIP7□□ are excluded from above-mentioned precautions, 1) to 3).

Attached table "IPD availability by customer"

Parts No.			Companies/areas to which products can be sold	Companies/areas to which products cannot be sold	Application
MIP13□ MIP14□ MIP15□ MIP16□	MIP17□ MIP18□ MIP01□□ MIP02□□	MIP2□□□ MIP3□□□ MIP4□□□ MIP9A□□	· Japanese companies in Japan · Japanese companies in Asia (50% or more owned)	· Companies in European and American countries · Asian companies in Asia · Other local companies	· For power supply · For DC-DC converter
MIP10□ MIP11□ MIP803/804/806 MIP9E□□	MIP811/812 MIP814/815/816 MIP82□ MIP55□		· Japanese companies in Japan · Japanese companies in Asia (50% or more owned) · Asian companies in Asia	· Companies in European and American countries · Other local companies	· For power supply · For EL driver · For LED lighting driver
MIP50□ MIP51□	MIP7□□		· No restrictions in terms of contract	· No restrictions in terms of contract	· For lamp driver/ car electronics accessories

Note) If you have any inquiries about sales, contact Corporate Marketing & Sales Division of our company.

ENTEGRECİ

Bu belge www.entegreci.com üzerinden sunulmaktadır.

Elektronik komponent tedarikinde Entegreci

Entegreci, Eskişehir merkezli, Türkiye geneline satış yapan bir elektronik komponent mağazasıdır. Entegreler (IC), mikrodenetleyiciler, transistörler, diyotlar, pasif elemanlar, konnektörler, modüller ve geliştirme kartları tek adetten seri üretim adetlerine kadar satılır. Ürün sayfalarında güncel stok durumunu, fiyatı ve datasheet bağlantısını bulabilirsiniz.

Parça koduyla arama

Üretici parça numarasını yazın; stok ve fiyatı hemen görün.

www.entegreci.com

Ürün kategorileri

Entegreden kapasitöre tüm elektronik komponent kategorileri.

Kategorilere göz atın

Üreticiler

Aradığınız üreticinin ürünlerini tek sayfada inceleyin.

Üreticileri görün

Toplu alım ve teklif

Listede olmayan ya da yüksek adetli parçalar için teklif isteyin.

Teklif isteyin

www.entegreci.com | **destek@entegreci.com** | **0850 305 90 34**

Entegreci is an online electronic components store based in Türkiye. Search by manufacturer part number to see stock, prices and datasheets for integrated circuits, microcontrollers, transistors, passive components and connectors, or request a quote for parts that are not listed.

Bu sayfa Entegreci tarafından eklenmiştir. Belgenin önceki sayfaları asıl yayıncısına aittir ve içeriği değiştirilmemiştir; en güncel sürüm için belgenin yayıncısına başvurun.