18 Channel Smart Lowside Switch

ASSP for Powertrain

Data Sheet

Features

- Short Circuit Protection
- Overtemperature Protection
- Overvoltage Protection
- 16 bit Serial Data Input and Diagnostic Output (2 bit/chan. acc. SPI Protocol)
- Direct Parallel Control of 16 channels for PWM Applications
- Low Quiescent Current
- Compatible with 3.3V Microcontrollers
- Electrostatic discharge (ESD) Protection
- Green Product (RoHS-compliant)
- AEC qualified



PG-MQFP-64-10

General description

18-fold Low-Side Switch (0.35 Ω to 1 Ω) in Smart Power Technology (SPT) with a Serial Peripheral Interface (SPI) and 18 open drain DMOS output stages. The TLE6244X is protected by embedded protection functions and designed for automotive and industrial applications. The output stages are controlled via SPI Interface. Additionally 16 of the 18 channels can be controlled direct in parallel for PWM applications. Therefore the TLE6244X is particularly suitable for engine management and powertrain systems.

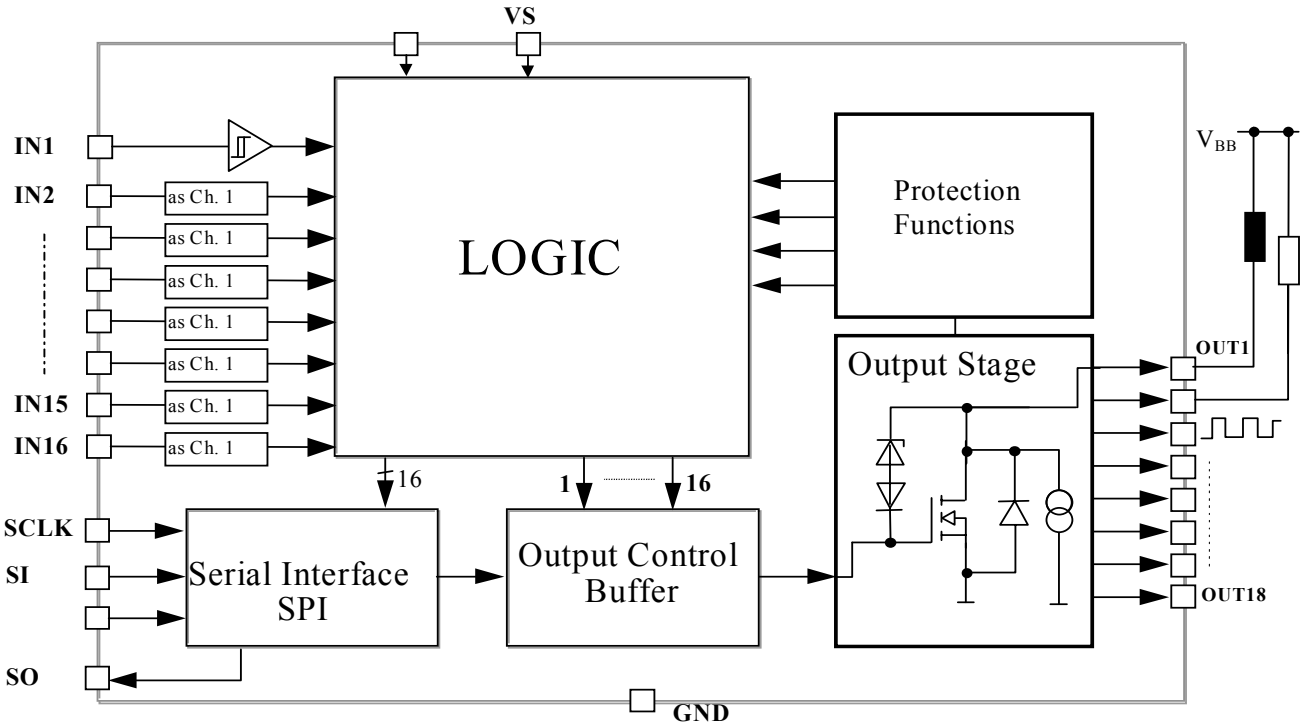

1. Description

1.1 Short Description

This circuit is available in PG-MQFP-64 package or as chip.

1.1.1 Features of the Power Stages

	Nominal Current	$R_{on,max}$ at T_J = 25°C	static current limitation enabled by SPI	Clamping
OUT1, 2, 5, 6	2.2A	400mΩ	-	70V
OUT3, OUT4	2.2A	380mΩ	-	70V
OUT7, OUT8	1.1A	780mΩ	-	45V
OUT9, OUT10	2.2A	380mΩ	X	45V
OUT11...OUT14	2.2A	380mΩ	-	45V
OUT15, OUT16	3.0A	280mΩ	X	45V
OUT17, OUT18 *)	1.1A	780mΩ	X	45V

*) only serial control possible (via SPI)

Parallel connection of power stages is possible (see 1.13)
Internal short-circuit protection
Phase relation: non-inverting (exception: IN8->OUT8 is inverting)

1.1.2 Diagnostic Features

The following types of error can be detected:
- Short-circuit to U_{Batt} (SCB)
- Short-circuit to ground (SCG)
- Open load (OL)
- Overtemperature (OT)

Individual detection for each output.
Serial transmission of the error code via SPI.

1.1.3 VDD-Monitoring

Low signal at pin $\overline{\text{ABE}}$ and shut-off of the power stages if VDD is out of the permitted range.
Exception: If OUT8 is controlled by IN8, OUT8 will only be switched off by the overvoltage detection and not by undervoltage detection.
The state of VDD can be read out via SPI.

1.1.4 µsec-bus

Alternatively to the parallel and SPI control of the power stages, a high speed serial bus interface can be configured as control of the power stages OUT1...OUT7 and OUT9...OUT16.

1.1.5 Power Stage OUT8

OUT8 can be controlled by SPI or by the pin IN8 only. When controlled by IN8 this power stage is functional if the voltage at the pin VDD is above 3,5V. OUT8 will not be reset by RST. In SPI mode the power stage is fully supervised by the VDD-monitor.

1.2 Block Diagram

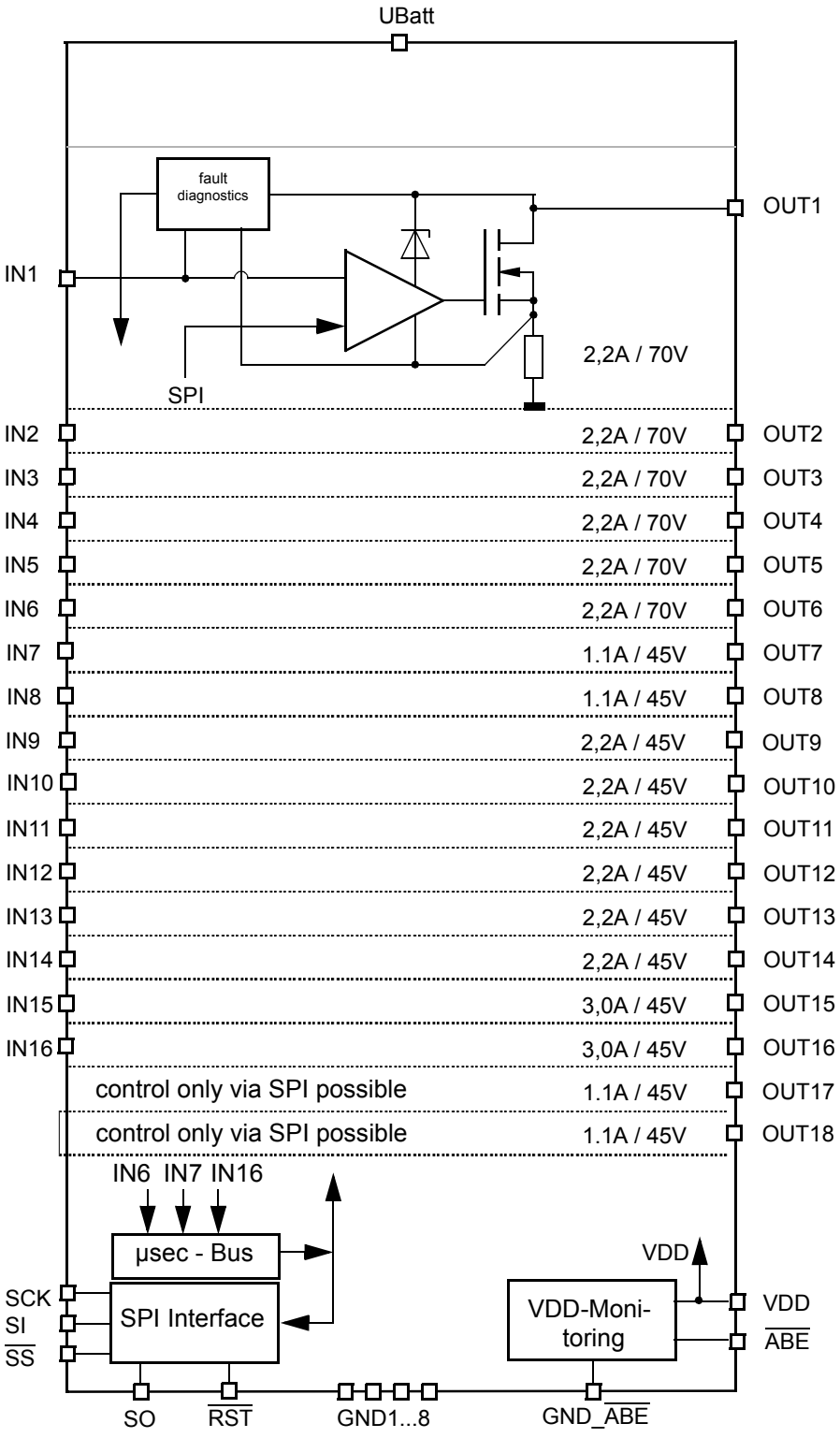

1.3 Description of the Power Stages

OUT1... OUT6

6 non-inverting low side power switches for nominal currents up to 2.2A. Control is possible by input pins, by the µsec-bus or via SPI. For T_J = 25°C the on-resistance of the power switches is below 400mΩ.
An integrated zener diode limits the output voltage to 70V typically.

A protection for inverse current is implemented for OUT1... OUT4 for use as stepper-motor control.

OUT9... OUT14

6 non-inverting low side power switches for nominal currents up to 2.2A. Control is possible by input pins, by the µsec-bus or via SPI. For T_J = 25°C the on-resistance of the power switches is below 380mΩ.
An integrated zener diode limits the output voltage to 45V typically.

OUT15, OUT16

2 non-inverting low side power switches for nominal currents up to 3.0A. Control is possible by input pins, by the µsec-bus or via SPI. For T_J = 25°C the on-resistance of the power switches is below 280mΩ.
An integrated zener diode limits the output voltage to 45V typically.

OUT7, OUT8, OUT17, OUT18

4 low side power switches for nominal currents up to 1100mA. Stage 7 is non-inverting, Stage 8 is inverting (IN8 = '1' => OUT8 is active). For the output OUT7 control is possible by the input pin, by the µsec-bus or via SPI, OUT8 is controlled by the input pin IN8 or via SPI, for the outputs OUT17 and OUT18 control is only possible via SPI. For T_J = 25°C the on-resistance of the power switches is below 780mΩ.
An integrated zener diode limits the output voltage to 45V typically.

In order to increase the switching current or to reduce the power dissipation parallel connection of power stages is possible (for additional information see 1.13).
The power stages are short-circuit proof:
Power stages **OUT1...OUT8, OUT11.14**: In case of overload (SCB) they will be turned off after a given delay time. During this delay time the output current is limited by an internal current control loop.
Power stages **OUT9, OUT10, OUT15...OUT18**:
In case of SCB these power stages can be configured for a shut-down mode or for static current limitation. In the shut down mode while SCB they will behave like OUT1..8 or OUT11..14.
In case of static current limitation and SCB the current is limited and the corresponding bit combination is set (early warning) after a given delay time. They will not be turned off. If this condition leads to an overtemperature condition, the output will be set into a low duty cycle PWM (selective thermal shut- down with restart) to prevent critical chip temperature.

There are 3 possibilities to turn the power stages on again:
- turn the power stage off and on, either via serial control (SPI) or via parallel control (input pin, except outputs OUT17 and OUT18) or by the µsec-bus (except OUT8, OUT17,OUT18)
- applying a reset signal.
- sending the instruction "del_dia" by the SPI-interface

The VDD-monitoring locks all power stages, except OUT8 for access by the IN8 input. OUT8 is locked by an internal threshold of 3,5V maximum when controlled by IN8. Otherwise OUT8 is locked by the VDD-monitor.

All low side switches are equipped with fault diagnostic functions:

- short-circuit to U_{Batt}: (SCB) can be detected if switches are turned on
- short-circuit to ground: (SCG) can be detected if switches are turned off
- open load: (OL) can be detected if switches are turned off
- overtemperature: (OT) will only be detected if switches are turned on

The fault conditions SCB, SCG, OL and OT will not be stored until an integrated filtering time is expired (please note for PWM application). If, at one output, several errors occur in a sequence, always the last detected error will be stored (with filtering time). All fault conditions are encoded in two bits per switch and are stored in the corresponding SPI registers. Additionally there are two central diagnostic bits: one specially for OT and one for fault occurrence at any output.

The registers can be read out via SPI. After each read out cycle the registers have to be cleared by the DEL_DIA command.

1.3.1 Power Stage OUT8 (Condensed Description)

1.3.1.1 Control of OUT8 and VDD-Monitoring

OUT8 can be controlled by SPI or by the pin IN8 only, control by µs-bus is not possible. When controlled by IN8 this power stage is functional if the voltage at the pin VDD is above 3,5V. In SPI mode the power stage is fully supervised by the VDD-monitor.
If OUT8 is controlled by IN8, OUT8 will only be switched off by the overvoltage detection and not by undervoltage detection.

1.3.1.2 Phase Relation IN8 - OUT8

The phase relation IN8 -> OUT8 is inverting.
OUT8 is active if IN8 is set to logic '1' (high level, see 3.4.2) in case of parallel access.
On executing the read instruction on RD_INP1/2 the inverted status of IN8 is read back.

1.3.1.3 Reset / Power Stage Diagnostics

If OUT8 is controlled by IN8, OUT8 will not be reseted by RST.
After reset parallel control (by IN8) is active for OUT8.
If UVDD < 4.5V errors are not stored because of the active RST of the external Regulator. Nevertheless
OUT8 is protected against overload.

1.3.1.4 Input Current

The control input IN8 has an internal pull-down current source. Thus the input currents I IN8 are positive (flow into the pin).

1.3.1.5 On Resistance

For OUT8 and 3.5V < UVDD < 4.5V R on increases (see 3.8.5).

1.3.1.6 Parallel Connection of Power Stages

Parallel connection of power stages with OUT8 and parallel control is prohibited (inverting input IN8). Control via SPI is possible. See 1.13.

1.4 Pinout

Function	Pin	Pin Number
Input 1	IN1	7
Input 2	IN2	46
Input 3	IN3	10
Input 4	IN4	43
Input 5	IN5	6
Input 6 or FDA	IN6	63
Input 7 or SSY	IN7	61
Input 8	IN8	22
Input 9	IN9	20
Input 10	IN10	33
Input 11	IN11	5
Input 12	IN12	48
Input 13	IN13	13
Input 14	IN14	40
Input 15	IN15	1
Input 16 or FCL	IN16	62
Output 1	OUT1	8
Output 2	OUT2	45
Output 3	OUT3	9
Output 4	OUT4	44
Output 5_1	OUT5_1	16
Output 5_2	OUT5_2	17
Output 6_1	OUT6_1	37
Output 6_2	OUT6_2	36
Output 7	OUT7	60
Output 8	OUT8	57
Output 9_1	OUT9_1	18
Output 9_2	OUT9_2	19
Output 10_1	OUT10_1	35
Output 10_2	OUT10_2	34
Output 11	OUT11	4
Output 12	OUT12	49
Output 13_1	OUT13_1	14
Output 13_2	OUT13_2	15
Output 14_1	OUT14_1	39
Output 14_2	OUT14_2	38
Output 15_1	OUT15_1	2
Output 15_2	OUT15_2	3
Output 16_1	OUT16_1	51
Output 16_2	OUT16_2	50
Output 17	OUT17	25
Output 18	OUT18	28
(Note: OUTxy_1 and OUTxy_2 have to be connected externally!)		
Slave Select	$\overline{SS}$	56
Serial Output	SO	53
Serial Input	SI	55
SPI Clock	SCK	54

Supply Voltage VDD	VDD	47
Supply Voltage U_{Batt}	Ubatt	23
GND1	GND1	26
GND2	GND2	27
GND3	GND3	58
GND4	GND4	59
GND5	GND5	11
GND6	GND6	12
GND7	GND7	42
GND8	GND8	41
Sense Ground VDD-Monitoring	$\overline{GND_ABE}$	29
In-/Output VDD-Monitoring	$\overline{ABE}$	30
Reset (low active)	$\overline{RST}$	31
not connected	nc	21, 24, 32, 52, 64

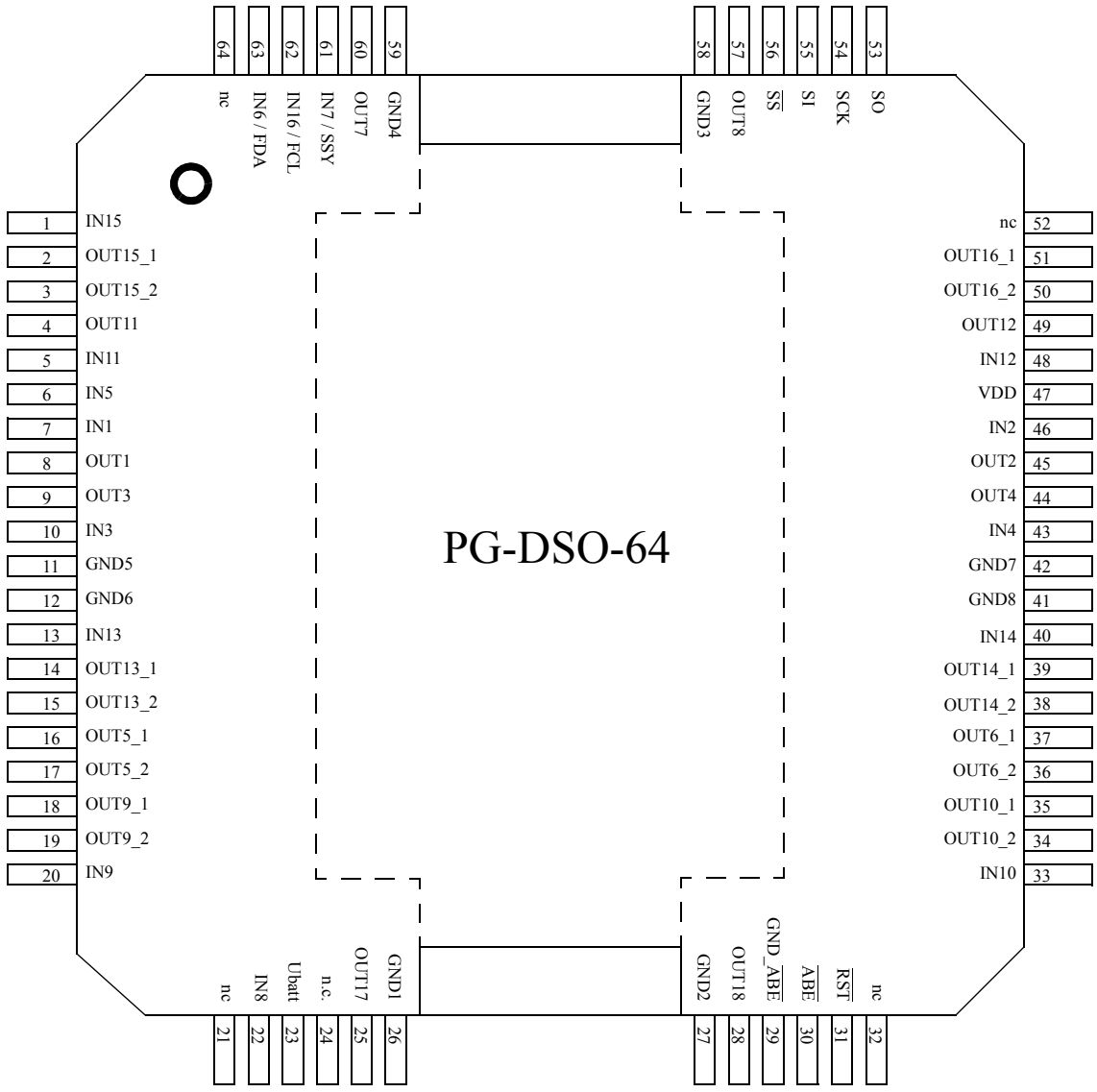

1.5 Function of Pins

IN1 to IN16	Control inputs of the power stages Internal pull-up current sources (exception: IN8 with pull-down current source)
FCL FDA SSY	Clock for the µsec-bus (pin shared with IN16) Data for the µsec-bus (pin shared with IN6) Strobe and Synchronisation for the µsec-bus (pin shared with IN7)
OUT1 to OUT18	Outputs of the power switches Short-circuit proof Low side switches Limitation of the output voltage by zener diodes
VDD	Supply voltage 5V
UBatt	Supply voltage U_{Batt} Pin must not be left open but has to be connected either to U_{Batt} or to V_{DD} (e.g. in commercial vehicles)
GND1 to GND8	Ground pins Ground pins for the power stages (see 2.4) Ground reference of all logic signals is GND1/2
$\overline{RST}$	Reset Active low Locks all power switches regardless of their input signals (except OUT8) Clears the fault registers Resets the µsec-bus interface registers
$\overline{ABE}$	In-/Output VDD-Monitoring Active low Output pin for the VDD-Monitoring Input pin for the shut-off signal coming from the supervisor
GND_$\overline{ABE}$	Sense ground VDD-Monitoring
SI, SO, SCK, $\overline{SS}$	SPI Interface

1.6 SPI Interface

The serial SPI interface establishes a communication link between TLE6244X and the systems microcontroller. TLE6244X always operates in slave mode whereas the controller provides the master function. The maximum baud rate is 5 MBaud.
The TLE6244X is selected by the SPI master by an active slave select signal at $\overline{SS}$ and by the first two bits of the SPI instruction.SI is the data input (Slave In), SO the data output (Slave Out). Via SCK (Serial Clock Input) the SPI clock is provided by the master.
In case of inactive slave select signal (High) the data output SO goes into tristate.

Block Diagram:

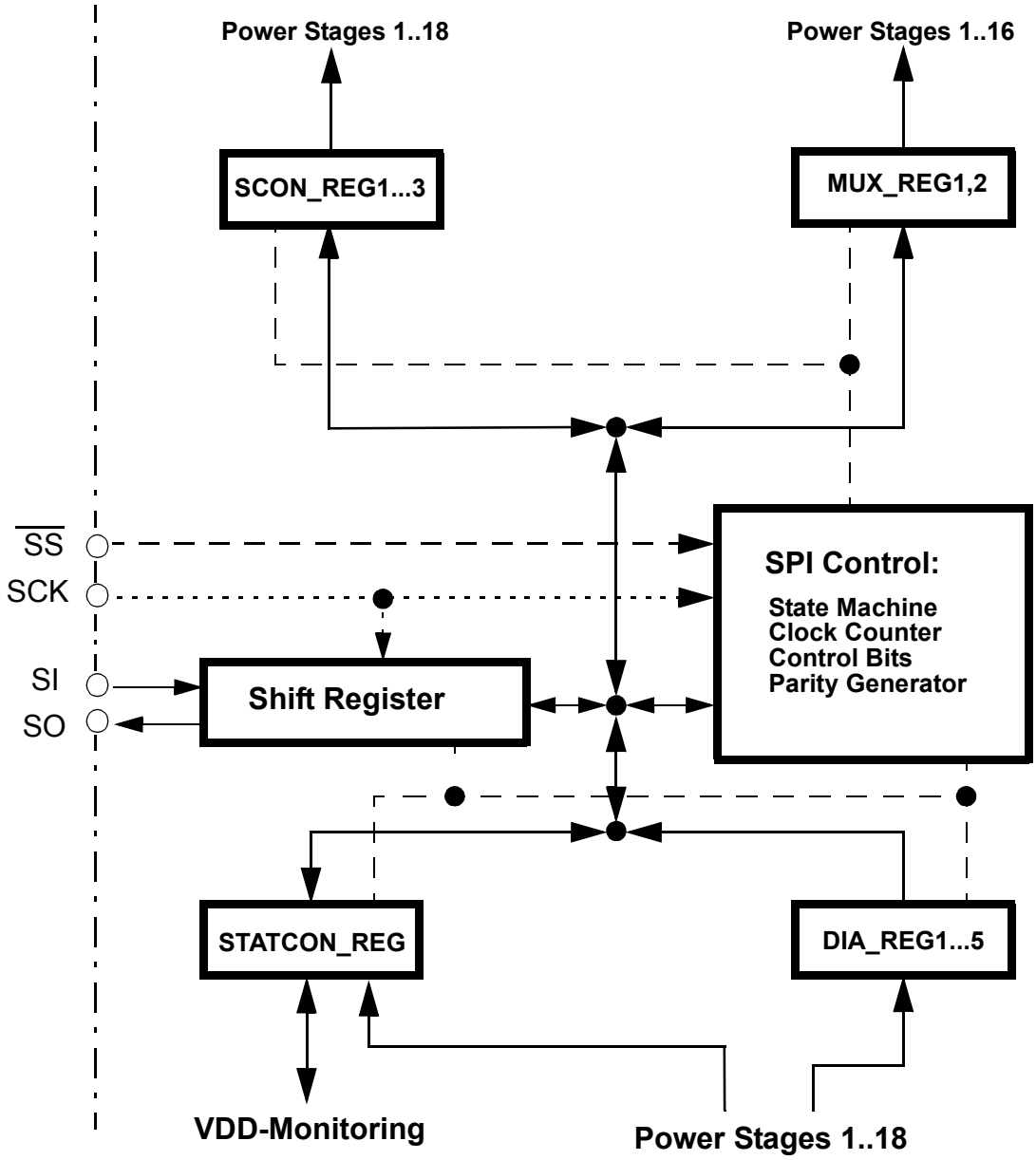

A SPI communication always starts with a SPI instruction sent from the controller to TLE6244X. During a write cycle the controller sends the data after the SPI instruction, beginning with the MSB. During a reading cycle, after having received the SPI instruction, TLE6244X sends the corresponding data to the controller, also starting with the MSB.

SPI Command/Format:

MSB							
7	6	5	4	3	2	1	0
0	0	INSTR4	INSTR3	INSTR2	INSTR1	INSTR0	INSW

Bit	**Name**	**Description**
7,6	CPAD1,0	Chip Address (has to be ‘0’, ‘0’)
5-1	INSTR (4-0)	SPI instruction (encoding)
0	INSW	Parity of the instruction

Characteristics of the SPI Interface:

1) If the slave select signal at $\overline{SS}$ is High, the SPI-logic is set on default condition, i.e. it expects an instruction.

2) If the 5V-reset ($\overline{RST}$) is active, the SPI output SO is switched into tristate.
The VDD monitoring ($\overline{ABE}$) has no influence on the SPI interface.

3) Verification byte:
Simultaneously to the receipt of an SPI instruction TLE6244X transmits a verification byte via the output SO to the controller. This byte indicates regular or irregular operation of the SPI. It contains an initial bit pattern and a flag indicating an invalid instruction of the previous access.

4) On a read access the databits at the SPI input SI are rejected. On a writing access or after the DEL_DIA instruction the TLE6244XTLE6244X sets the SPI output SO to low after sending the verification byte. If more than 16 bits are received the rest of the frame is rejected.

5) Invalid instruction/access:
An instruction is invalid, if one of the following conditions is fulfilled:
- an unused instruction code is detected (see tables with SPI instructions)
- in case the previous transmission is not completed in terms of internal data processing
- number of SPI clock pulses counted during active $\overline{SS}$ differs from exactly 16 clock pulses.
A write access and the instruction DEL_DIA is internally suppressed (i.e internal registers will not be affected) in all cases where at the rising (inactive) edge of $\overline{SS}$ the number of falling edges applied to the SPI input SCK during the access is not equal to 16. A write access is also internally suppressed (i.e internal registers will not be affected) if at the rising (inactive) edge of $\overline{SS}$ a 17th bit is submitted (SCK=‘1’).

After the bits CPAD1,0 and INSTR (4-0) have been sent from the microcontroller TLE6244X is able to check if the instruction code is valid. If an invalid instruction is detected, any modification on a register of TLE6244X is not allowed and the data byte ‘FFh’ is transmitted after having sent the verification byte. If a valid read instruction is detected the content of the corresponding register is transmitted to the controller after having sent the verification byte (even if bit INSW afterwards is wrong). If a valid write instruction is

detected the data byte ’00h’ is transmitted to the controller after having sent the verification byte (even if bit INSW afterwards is wrong) but modifications on any register of TLE6244 are not allowed until bit INSW is valid, too.

If an invalid instruction is detected bit TRANS_F in the following verification byte is set to ’High’. This bit must not be cleared before it has been sent to the microcontroller.

6) If TLE6244X and additional IC’s are connected to one common slave select, they are distinguished by the chip address (CPAD1, CPAD0). If an IC with 32bit-transmission-format is selected, TLE6232 must not be activated, even if slave select is set to ’low’ and the first two bits of the third byte of the 32bit-transmission are identical to the chip address of TLE6244X.
During the transmission of CPAD1 and CPAD0 the data output SO remains in tristate (see timing diagram of the SPI in chapter 3.9.).

SPI access format:

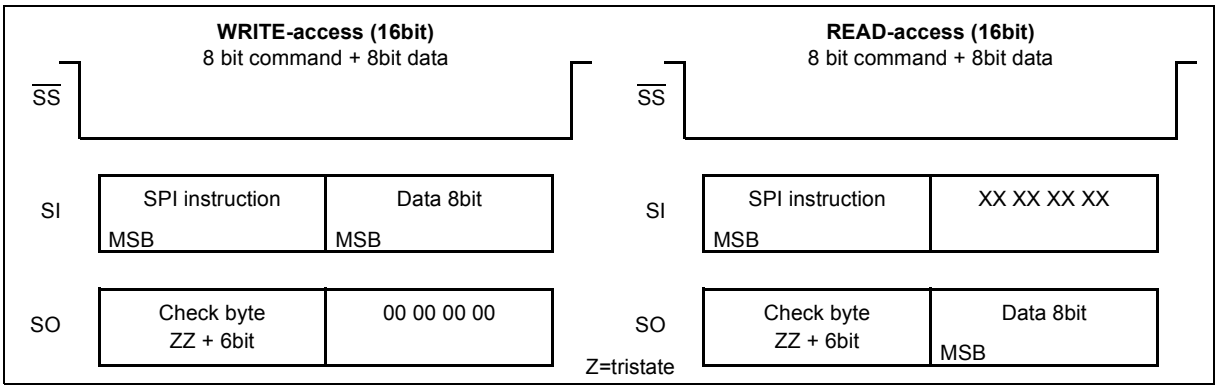

Verification byte:

MSB							
7	6	5	4	3	2	1	0
Z	Z	1	0	1	0	1	TRANS_F

Bit	**Name**	**Description**
0	TRANS_F	Bit = 1: error detected during previous transfer Bit = 0: previous transfer was recognised as valid State after reset: 0
1		Fixed to High
2		Fixed to Low
3		Fixed to High
4		Fixed to Low
5		Fixed to High
6		send as high impedance
7		send as high impedance

SPI Instructions

SPI Instruction	Encoding			Description
	bit 7,6 CPAD1,0	bit 5,4,3,2,1 INSTR(4...0)	Parity	
RD_IDENT1	00	00000	0	read identifier 1
RD_IDENT2	00	00001	1	read identifier2
WR_STATCON	00	10001	0	write into STATCON_REG
WR_MUX1	00	10010	0	write into MUX_REG1
WR_MUX2	00	10011	1	write into MUX_REG2
WR_SCON1	00	10100	0	write into SCON_REG1
WR_SCON2	00	10101	1	write into SCON_REG2
WR_SCON3	00	10110	1	write into SCON_REG3
WR_CONFIG	00	10111	0	write into CONFIG
RD_MUX1	00	00010	1	read MUX_REG1
RD_MUX2	00	00011	0	read MUX_REG2
RD_SCON1	00	00100	1	read SCON_REG1
RD_SCON2	00	00101	0	read SCON_REG2
RD_SCON3	00	00110	0	read SCON_REG3
RD_STATCON	00	00111	1	read STATCON_REG
DEL_DIA	00	11000	0	resets the 5 diagnostic registers DIA_REG
RD_DIA1	00	01000	1	read DIA_REG1
RD_DIA2	00	01001	0	read DIA_REG2
RD_DIA3	00	01010	0	read DIA_REG3
RD_DIA4	00	01011	1	read DIA_REG4
RD_DIA5	00	01100	0	read DIA_REG5
RD_CONFIG	00	01101	1	read CONFIG
RD_INP1	00	01110	1	read INP_REG1
RD_INP2	00	01111	0	read INP_REG2
		all others		no function

1.6.1 Serial/Parallel Control

Serial/Parallel Control of the Power Stages 1...16 and Serial Control (SPI) of the Power Stages 17 and 18:
The registers MUX_REG1/2 and the bmux-bit prescribe parallel control or serial control (SPI or µsec-bus) of the power stages.

(SPI-Instructions: WR_MUX1...2, RD_MUX1...2, WR_SCON1...3, RD_SCON1...3)

The following table shows the truth table for the control of the power stages 1...18. The registers MUX_REG1, 2 prescribe parallel-control or serial control of the power stages. The registers SCON_REG1...3 prescribe the state of the power stage in case of SPI-serial control. BMUX determines parallel control or control by µsec-bus.
For the power stages 17 and 18 control is exclusively possible via SCON17/18. IN17/18 and MUX17/18 do **not** exist. BMUX has no function for OUT17/18.

$\overline{\text{ABE}}$	$\overline{\text{RST}}$	INx	BMUX	MUXx	SCONx	µsec-REGx	Output OUTx of Power Stage x, x = 1..18
0	0	X	X	X	X	X	OUTx off
0	1	X	X	X	X	X	OUTx off
1	0	X	X	X	X	X	OUTx off
1	1	X	X	0	0	X	SPI Control: OUTx on
1	1	X	X	0	1	X	SPI Control: OUTx off
1	1	0	1	1	X	X	Parallel Control: OUTx on
1	1	1	1	1	X	X	Parallel Control: OUTx off
1	1	X	0	1	X	0	µsec-bus Control: OUTx on
1	1	X	0	1	X	1	µsec-bus Control: OUTx off

Exception: OUT8 is on (active) if IN8 is set to logic ‘1’ (and off if IN8 is set to logic ‘0’) in case of parallel access.

Note: OUT8 cannot be controlled by the µsec-Bus. Refer to section 1.7.

Description of the SPI Registers

Register: MUX_REG1							
7	6	5	4	3	2	1	0
MUX7	MUX6	MUX5	MUX4	MUX3	MUX2	MUX1	MUX0

State of Reset: 80H		
Access by Controller: Read/Write		
Bit	**Name**	**Description**
0	MUX0	Serial or parallel control of power stage 1
1	MUX1	Serial or parallel control of power stage 2
2	MUX2	Serial or parallel control of power stage 3
3	MUX3	Serial or parallel control of power stage 4
4	MUX4	Serial or parallel control of power stage 5
5	MUX5	Serial or parallel control of power stage 6
6	MUX6	Serial or parallel control of power stage 7
7	MUX7	Serial or parallel control of power stage 8

Register: MUX_REG2							
7	6	5	4	3	2	1	0
MUX15	MUX14	MUX13	MUX12	MUX11	MUX10	MUX9	MUX8

State of Reset: 00H		
Access by Controller: Read/Write		
Bit	**Name**	**Description**
0	MUX8	Serial or parallel control of power stage 9
1	MUX9	Serial or parallel control of power stage 10
2	MUX10	Serial or parallel control of power stage 11
3	MUX11	Serial or parallel control of power stage 12
4	MUX12	Serial or parallel control of power stage 13
5	MUX13	Serial or parallel control of power stage 14
6	MUX14	Serial or parallel control of power stage 15
7	MUX15	Serial or parallel control of power stage 16

Register: SCON_REG1							
7	6	5	4	3	2	1	0
SCON7	SCON6	SCON5	SCON4	SCON3	SCON2	SCON1	SCON0

State of Reset: FFH		
Access by Controller: Read/Write		
Bit	**Name**	**Description**
0	SCON0	State of serial control of power stage 1
1	SCON1	State of serial control of power stage 2
2	SCON2	State of serial control of power stage 3
3	SCON3	State of serial control of power stage 4
4	SCON4	State of serial control of power stage 5
5	SCON5	State of serial control of power stage 6
6	SCON6	State of serial control of power stage 7
7	SCON7	State of serial control of power stage 8

Register: SCON_REG2							
7	6	5	4	3	2	1	0
SCON15	SCON14	SCON13	SCON12	SCON11	SCON10	SCON9	SCON8

State of Reset: FFH		
Access by Controller: Read/Write		
Bit	**Name**	**Description**
0	SCON8	State of serial control of power stage 9
1	SCON9	State of serial control of power stage 10
2	SCON10	State of serial control of power stage 11
3	SCON11	State of serial control of power stage 12
4	SCON12	State of serial control of power stage 13
5	SCON13	State of serial control of power stage 14
6	SCON14	State of serial control of power stage 15
7	SCON15	State of serial control of power stage 16

Register: SCON_REG3							
7	6	5	4	3	2	1	0
1	1	1	1	1	1	SCON17	SCON16

State of Reset: FFH		
Access by Controller: Read/Write		
Bit	**Name**	**Description**
0	SCON16	State of serial control of power stage 17
1	SCON17	State of serial control of power stage 18
7-2		No function: HIGH on reading

1.6.2 Diagnostics/Encoding of Failures

Description of the SPI Registers

(SPI Instructions: RD_DIA1...5)

Register: DIA_REG1							
7	6	5	4	3	2	1	0
DIA7	DIA6	DIA5	DIA4	DIA3	DIA2	DIA1	DIA0

State of Reset: FFH		
Access by Controller: Read only		
Bit	**Name**	**Description**
1-0	DIA (1-0)	Diagnostic Bits of power stage 1
3-2	DIA (3-2)	Diagnostic Bits of power stage 2
5-4	DIA (5-4)	Diagnostic Bits of power stage 3
7-6	DIA (7-6)	Diagnostic Bits of power stage 4

Register: DIA_REG2							
7	6	5	4	3	2	1	0
DIA15	DIA14	DIA13	DIA12	DIA11	DIA10	DIA9	DIA8

State of Reset: FFH		
Access by Controller: Read only		
Bit	**Name**	**Description**
1-0	DIA (9-8)	Diagnostic Bits of power stage 5
3-2	DIA (11-10)	Diagnostic Bits of power stage 6
5-4	DIA (13-12)	Diagnostic Bits of power stage 7
7-6	DIA (15-14)	Diagnostic Bits of power stage 8

Register: DIA_REG3							
7	6	5	4	3	2	1	0
DIA23	DIA22	DIA21	DIA20	DIA19	DIA18	DIA17	DIA16

State of Reset: FFH

Access by Controller: Read only

Bit	Name	Description
1-0	DIA (17-16)	Diagnostic Bits of power stage 9
3-2	DIA (19-18)	Diagnostic Bits of power stage 10
5-4	DIA (21-20)	Diagnostic Bits of power stage 11
7-6	DIA (23-22)	Diagnostic Bits of power stage 12

Register: DIA_REG4							
7	6	5	4	3	2	1	0
DIA31	DIA30	DIA29	DIA28	DIA27	DIA26	DIA25	DIA24

State of Reset: FFH

Access by Controller: Read only

Bit	Name	Description
1-0	DIA (25-24)	Diagnostic Bits of power stage 13
3-2	DIA (27-26)	Diagnostic Bits of power stage 14
5-4	DIA (29-28)	Diagnostic Bits of power stage 15
7-6	DIA (31-30)	Diagnostic Bits of power stage 16

Register: DIA_REG5							
7	6	5	4	3	2	1	0
1	1	1	UBatt	DIA35	DIA34	DIA33	DIA32

State of Reset: FFH		
Access by Controller: Read only		
Bit	**Name**	**Description**
1-0	DIA (33-32)	Diagnostic Bits of power stage 17
3-2	DIA (35-34)	Diagnostic Bits of power stage 18
4	UBatt	0: Voltage Level at Pin UBatt is below 2V (typically) 1: Voltage Level at Pin UBatt is above 2V (typically) Diagnosis of UBatt is only possible if U_{VDD} > 4.5V Status of UBatt is not latched.
7-5		No function: High on reading

Encoding of the Diagnostic Bits of the Power Stages		
DIA(2*x-1)	DIA(2*x-2)	State of power stage x x = 1..18
1	1	Power stage o.k.
1	0	Short-circuit to U_{Batt} (SCB) / OT
0	1	Open load (OL)
0	0	Short-circuit to ground (SCG)

1.6.3 Configuration

The µsec-bus is enabled by this register. In addition the shut off at SCB can be configured for the power-stages OUT9, OUT10 and OUT15... OUT18.

CONFIG (Read and write)							
7	6	5	4	3	2	1	0
O16-SCB	O15-SCB	O10-SCB	O9-SCB	O18-SCB	O17-SCB	BMUX	1

State of Reset: FFh		
Bit	**Name**	**Description**
0		No function: HIGH on reading
1	BMUX	1: parallel inputs INx enabled 0: µsec-Bus Interface enabled
2	O17-SCB	1: The output OUT17 is switched off in case of SCB 0: The output is not switched off in case of SCB
3	O18-SCB	1: The output OUT18 is switched off in case of SCB 0: The output is not switched off in case of SCB
4	O9-SCB	1: The output OUT9 is switched off in case of SCB 0: The output is not switched off in case of SCB
5	O10-SCB	1: The output OUT10 is switched off in case of SCB 0: The output is not switched off in case of SCB
6	O15-SCB	1: The output OUT15 is switched off in case of SCB 0: The output is not switched off in case of SCB
7	O16-SCB	1: The output OUT16 s switched off in case of SCB 0: The output is not switched off in case of SCB

Description of the µsec-bus see chapter 1.7

1.6.4 Other

Reading the IC Identifier (SPI Instruction: RD_IDENT1):

IC Identifier1 (Device ID)							
7	6	5	4	3	2	1	0
ID7	ID6	ID5	ID4	ID3	ID2	ID1	ID0

Bit	Name	Description
7...0	ID(7...0)	ID-No.: 10101000

Reading the IC revision number (SPI Instruction: RD_IDENT2):

IC revision number							
7	6	5	4	3	2	1	0
SWR3	SWR2	SWR1	SWR0	MSR3	MSR2	MSR1	MSR0

Bit	Name	Description
7...4	SWR(3...0)	Revision corresponding to Software release: 0_{Hex}
3...0	MSR(3...0)	Revision corresponding to Maskset: 0_{Hex}

Reset of the Diagnostic Information (SPI Instruction: DEL_DIA):

Resets the 5 diagnostic registers DIA_REG1...5 to FFH and the common overtemperature flag in register STATCON_REG (Bit4) to High. These bits are only cleared by the DEL_DIA instruction when there is no failure entry at the input of the registers.
Access is performed like a writing access with any data byte.

In the case a power stage is shut off because of SCB, the output is activated again by the DEL_DIA instruction and the filtering-time is enabled. Therefore in case of SCB the output is activated and shut off after the shutoff delay.
For a power stage in the current limitation mode, the current limitation mode is left, if a DEL_DIA instruction has been received. If there is still the condition for SCB the current limitation mode is entered again.

On the following pages the conditions for set and reset of the SCB report in DIA_REGx is shown in several schematics. The signal „power stage control“ is generated as follows:

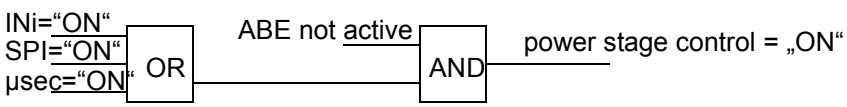

Schematic of SCB report of power stages OUT1...7,9...18 (power stage programmed for shut-off in case of SCB), SCB entry deleted by DEL_DIA after SCB condition disappeared and power stage control was toggled

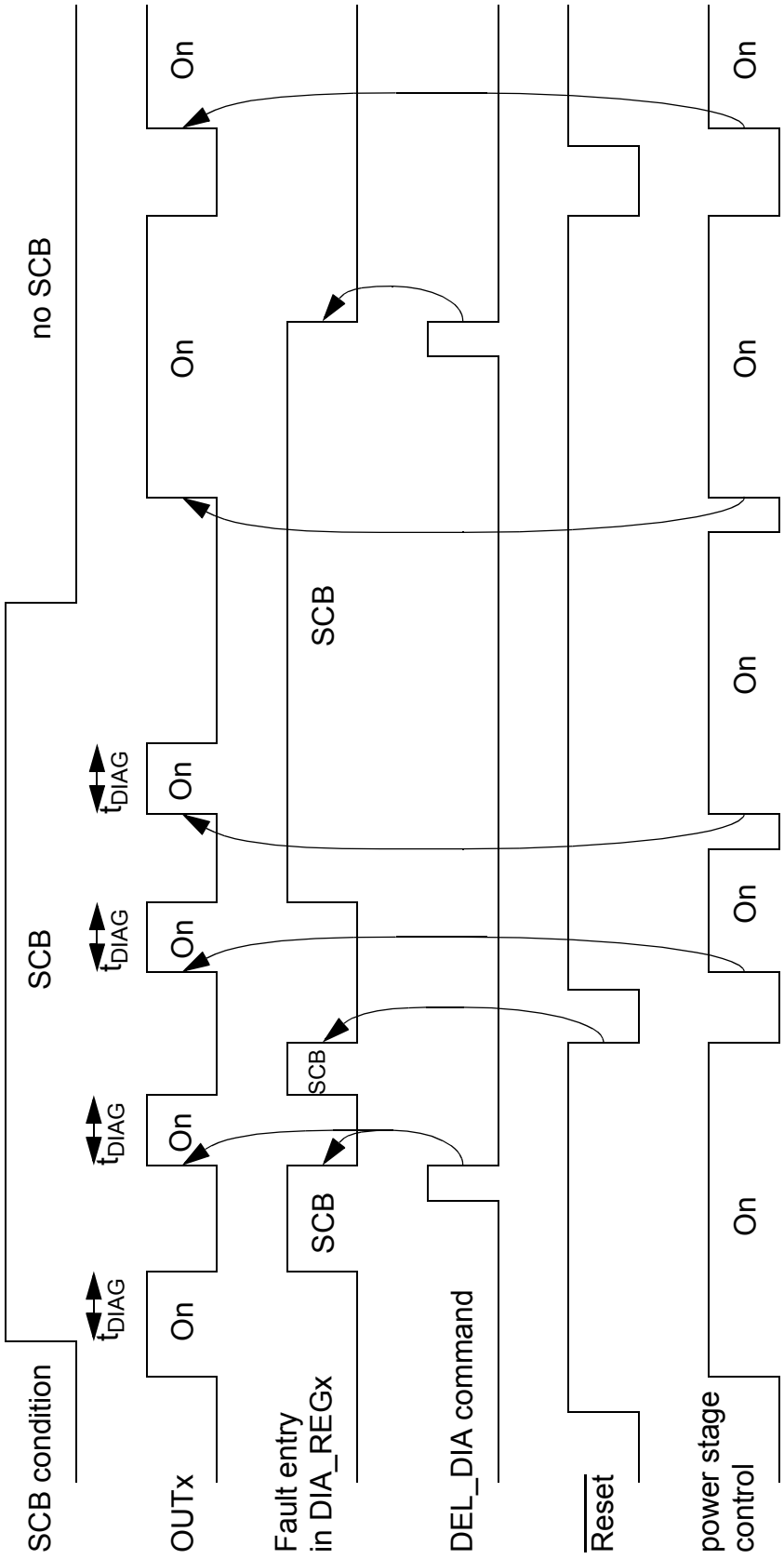

Schematic of SCB report of power stages OUT1...7,9...18 (power stage programmed for shut-off in case of SCB), SCB entry deleted by Reset after SCB condition disappeared and power stage control was toggled

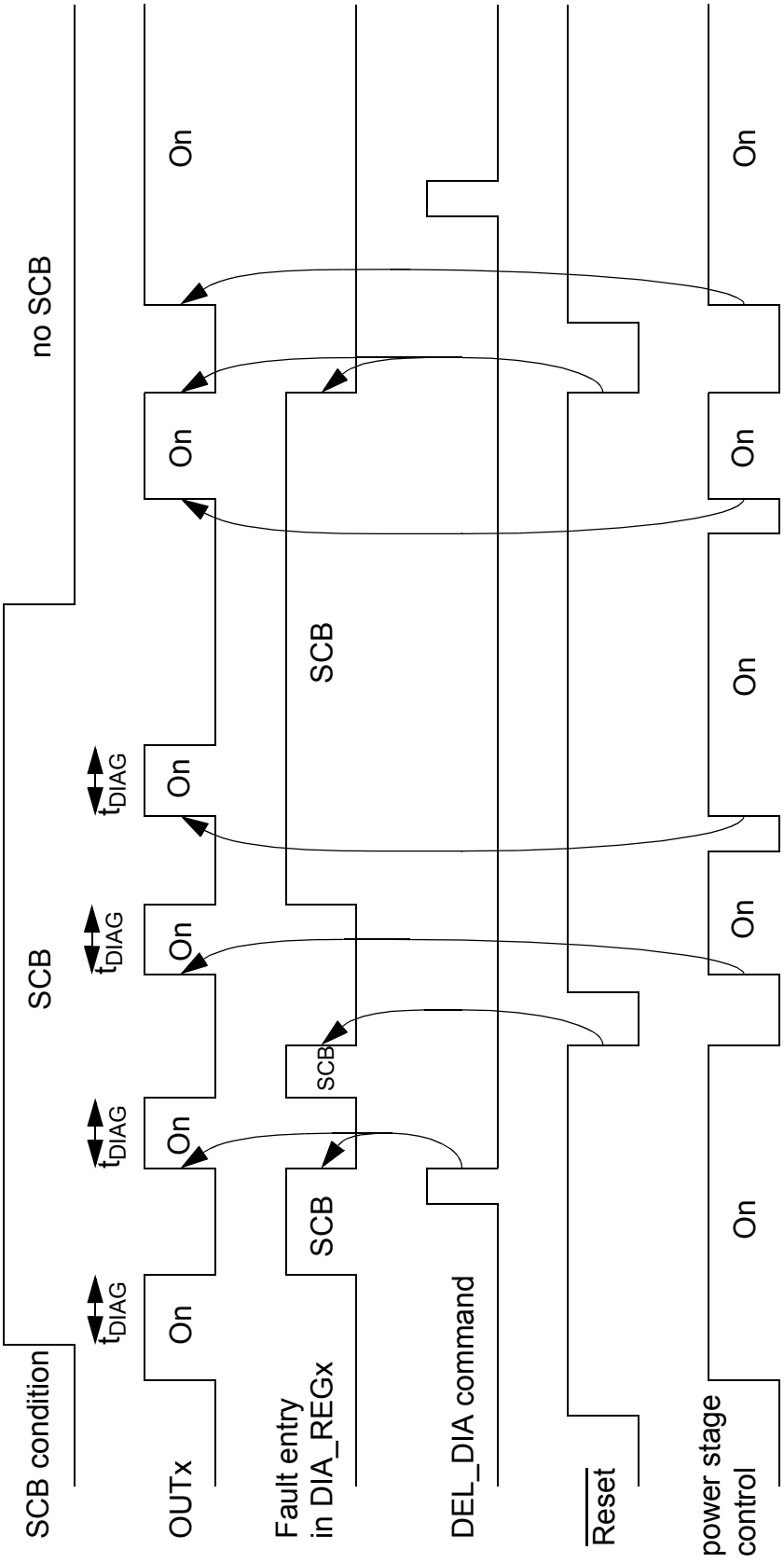

Schematic of SCB report of power stages OUT1...7,9...18 (power stage programmed for shut-off in case of SCB), SCB entry deleted by DEL_DIA after SCB condition disappeared but power stage control was not toggled

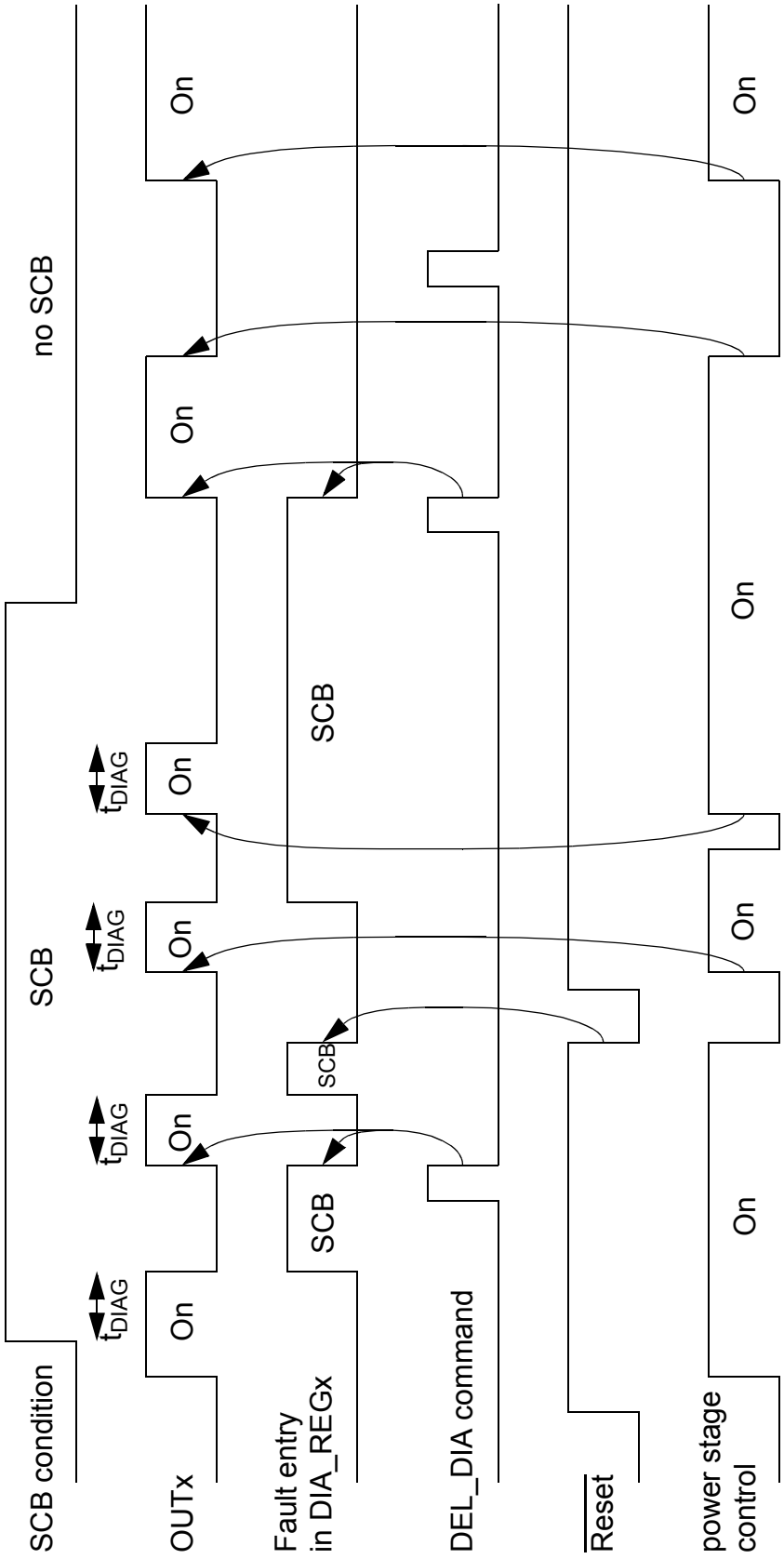

Schematic of SCB report of power stages OUT1...7,9...18 (power stage programmed for shut-off in case of SCB), SCB entry deleted by Reset after SCB condition disappeared but power stage control was not toggled

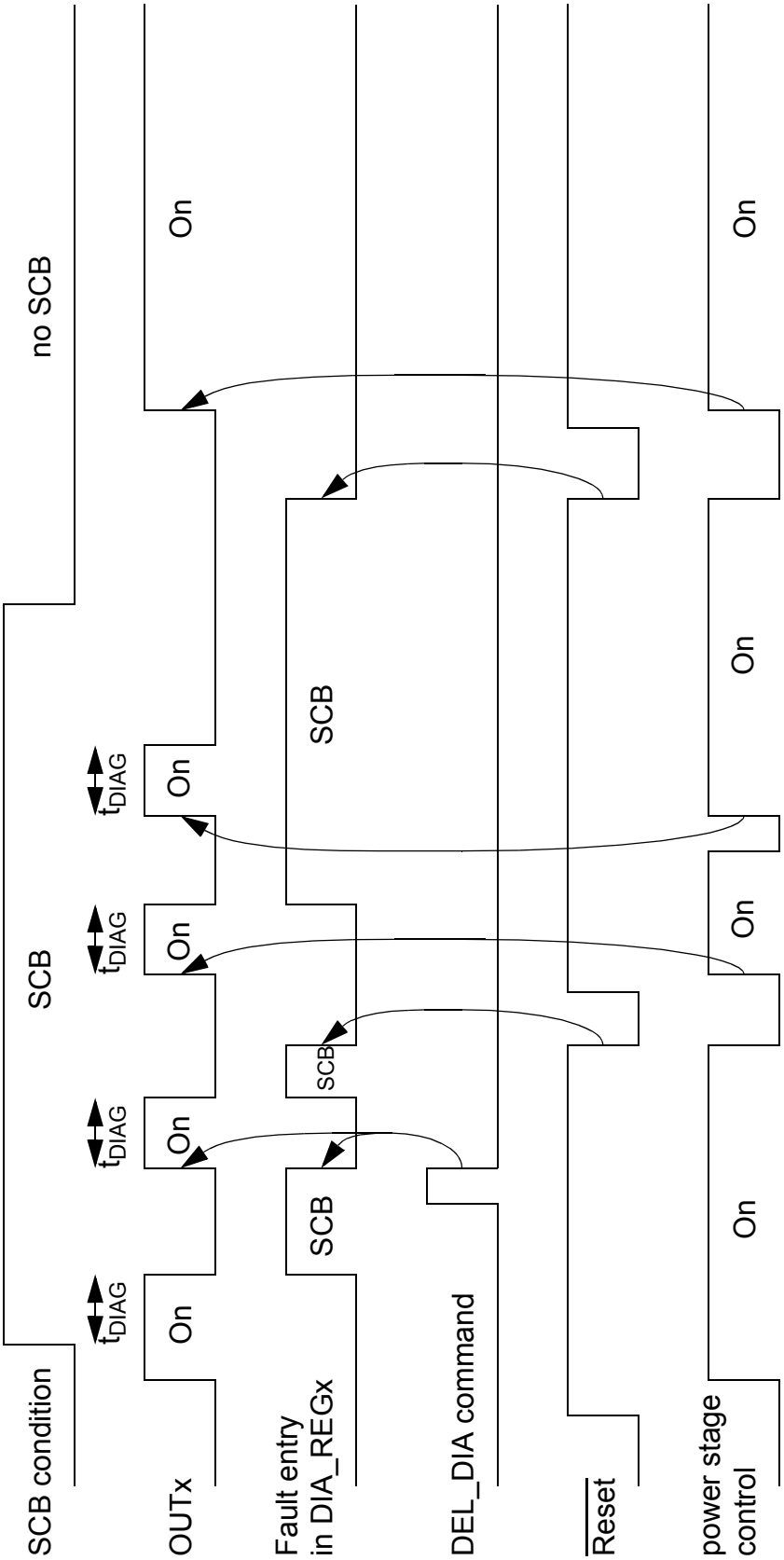

Schematic of SCB report of power stages OUT9,10,15...18 (power stage programmed for current limitation in case of SCB), SCB resp. OT flag entry deleted exemplary by DEL_DIA after SCB resp. OT condition disappeared and power stage control was toggled

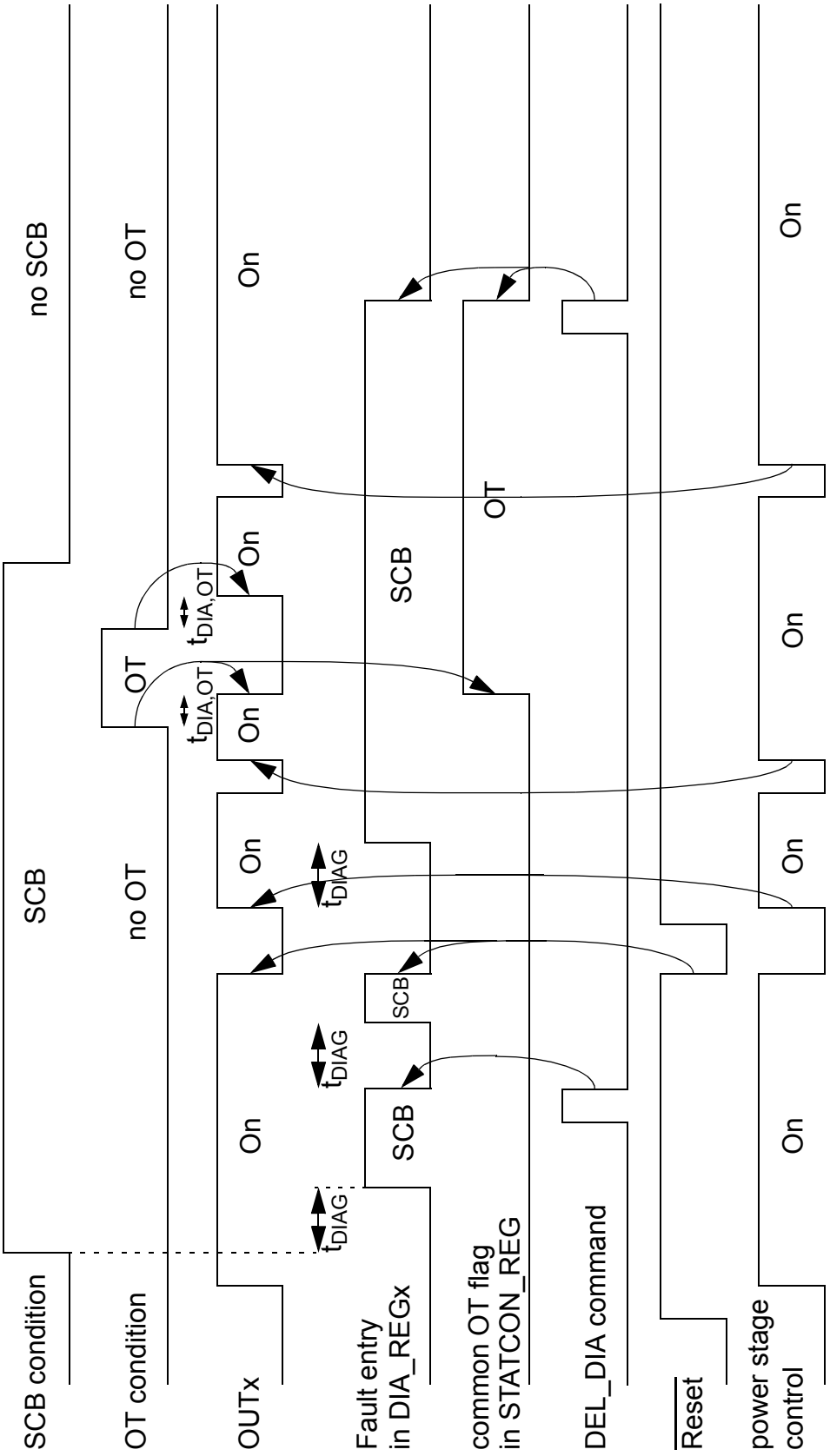

Reading Input1 (SPI Instruction: RD_INP1)
:

Register INP_REG1							
7	6	5	4	3	2	1	0
IN8	Test	0	IN5	IN4	IN3	IN2	IN1

Bit	Name	Description
0..4	IN(1...5)	Status of the input pins IN1... IN5
5		No function: LOW on reading
6	Test	µsec-test-bit, the bit D8 of the µsec-bus is read
7	IN8	Inverted status of the input pin IN8: Low level at pin IN8: Bit 7 = 1 High level at pin IN8: Bit 7 = 0

Reading Input2 (SPI Instruction: RD_INP2):

Register INP_REG2							
7	6	5	4	3	2	1	0
0	IN15	IN14	IN13	IN12	IN11	IN10	IN9

Bit	Name	Description
0..6	IN9...IN15	Status of the input pins IN9...IN15
7		No function: LOW on reading

The input pins IN1..IN5 and IN8...IN15 can be used as input port expander by reading the status of the input pins using the SPI-commands RD_INP1/2. If the µsec-bus-interface is enabled (BMUX=0) the pull-up current sources at the input IN1..5 and IN9..15 are disabled. If BMUX=1 the pullup current sources at these pins are enabled. The pull-up/pull-down current sources of the other input pins are not effected by the bit BMUX.

On executing the read instruction on RD_INP1/2, the present status (not latched) of the input pins INx is read back (exception: bit IN8 represents the **inverted** status of input pin IN8).

Reading the State resp. the Configuration:
(SPI Instructions: WR_STATCON, RD_STATCON)

Register: STATCON_REG							
7	6	5	4	3	2	1	0
CONFIG2	CONFIG1	CONFIG0	STATUS4	STATUS3	STATUS2	STATUS1	STATUS0

Bit	Name	Description
0	STATUS0	Bit = 1: No overvoltage at VDD Bit = 0: Overvoltage at VDD resp. state of overvoltage still stored (reset by CONFIG0 = 0) **Access by Controller:** Read only Overvoltage information (bit STATUS0 = 0) will not be reset by an external reset signal (pin RST=low). Overvoltage will be detected and stored (CONFIG0 = 1) during RST=low. The information will be deleted when an internal (undervoltage) reset occurs or when CONFIG0 is set to 0.
1	STATUS1	Bit = 1: No undervoltage at VDD Bit = 0: Undervoltage at VDD **Access by Controller:** Read only
2	STATUS2	Reading the voltage level at $\overline{ABE}$ **Access by Controller:** Read only
3	STATUS3	Common error flag Bit =1: At present no error is entered in one of the 5 diagnostic registers DIA_REG1..5. Bit = 0: For at least at one power stage an error has been detected and entered in the corresponding diagnostic register. **Access by Controller:** Read only
4	STATUS4	Common overtemperature flag Bit = 1: No overtemperature detected since the last reset of diagnostic information (by del_dia instruction, $\overline{RST}$ = Low or undervoltage at VDD (see 3.2.)) Bit = 0: Overtemperature for at least one power stage has been detected since the last reset of the diagnostic information (by del_dia instruction, $\overline{RST}$ = Low or undervoltage at VDD (see 3.2.)) **State of Reset: 1** **Access by Controller:** Read only
5	CONFIG0	Bit = 1: Latch function for overvoltage at VDD is switched on Bit = 0: Latch function for overvoltage at VDD is switched off **State of Reset: 1** **Access by Controller:** Read/Write

6	CONFIG1	Bit = 1: Lower threshold of VDD-monitoring is lifted if bit CONFIG2 = 0 (test of switch-off path) Bit = 0: Upper threshold of VDD-monitoring is reduced if bit CONFIG2 = 0 (test of switch-off path) **State of Reset: 1** **Access by Controller:** Read/Write
7	CONFIG2	Bit = 1: Test of VDD threshold is switched off Bit = 0: Test of VDD threshold is switched on **State of Reset: 1** **Access by Controller:** Read/Write

1.7 µsec - Bus Interface

The µsec-bus-interface is one of three possibilities to control the power stages. OUT1...OUT7 and OUT9...OUT16 are influenced by the reset input RST. If RST is set to Low, these power stages are switched off. After reset they are controlled by the SPI (default initialization of TLE6244X). Power stage 8 however is not influenced by the reset input if it's controlled by IN8 and $U_{VDD} \geq 3{,}5V$. Alternatively these outputs can be controlled either by the pins IN1...IN16 or by the µsec-bus interface. Exception: OUT8 can be controlled by IN8 or by the SPI-interface only. The bit 'Bus-Multiplex' (BMUX) in the SPI register CONFIG prescribes parallel access (IN1...IN7, IN9...IN16) or µsec-bus control (see figure below). Exception: If BMUX is set to '0' only the power-stages OUT1...OUT7 and OUT9...OUT16 are controlled by the µsec-bus.

Main features:

- 16 data bits for each data-frame (at the pin FDA)
- 16 clock-pulses for each data-frame (at the pin FCL)
- clock frequency TLE6244: 0...16 MHz
- one sync -input (pin SSY) to latch the input data stream
- input level interface same as for IN6, IN7, IN16
- no error correction

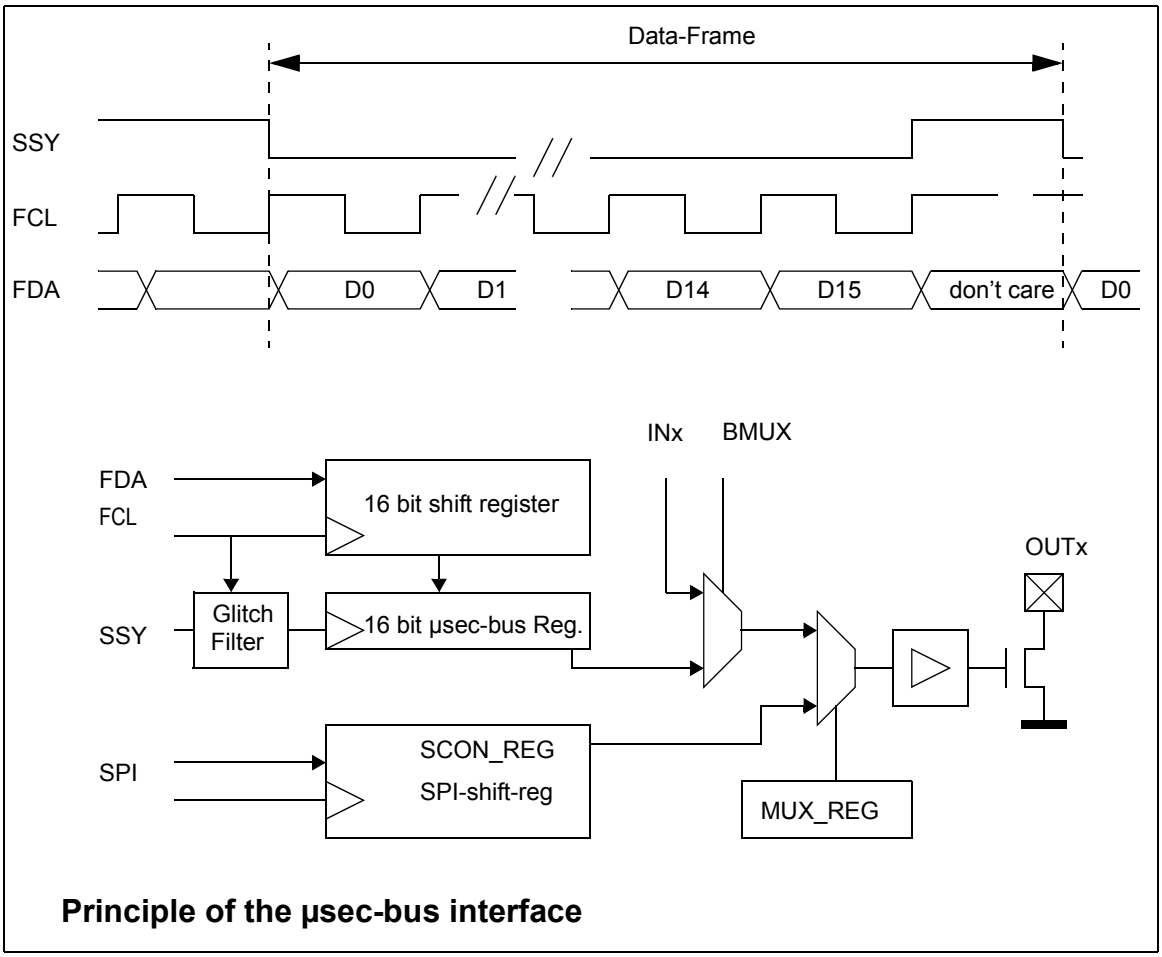

Principle of the µsec-bus interface

When the bit BMUX in CONFIG is set to Low, the power stages 1...7 and 9...16 are controlled by the µsec-bus-interface on condition that registers MUX_REG1/2 are configured for serial access. The received µsec-bus bit stream (D0... D15) is latched into a 16-bit register by the rising edge at SSY. Power stages 1...7 and 9...16 are switched according to bits D0...D7 and D9...D15:

µsec-bus	control of power stage	µsec-bus	control of power stage
D0	OUT14	D8	µsec-bus Test Bit
D1	OUT1	D9	OUT11
D2	OUT2	D10	OUT10
D3	OUT3	D11	OUT9
D4	OUT4	D12	OUT12
D5	OUT5	D13	OUT13
D6	OUT6	D14	OUT16
D7	OUT7	D15	OUT15

Bit Dx = 0: Power stage OUTx is switched on
Bit Dx = 1: Power stage OUTx is switched off
State of reset: $FFFF_H$

Because the power stage 8 is not controlled by the µsec-bus-interface, the corresponding bit D8 can be used as test bit, that can be read back by the SPI-interface (see register RD_INP1).
If the µsec-bus-interface is used to control the power stages, the input pins IN1..IN5 and IN8...IN15 can be used as input port expander by reading the status of the input pins by the SPI-commands RD_INP1/2.

1.8 Unused Power Stages

To avoid an „open load“ fault indication an unused power switch has to be connected to an external pull up resistor connected to U_{UB} or has to be switched on by the input pin or via SPI or the µsec-bus-interface.

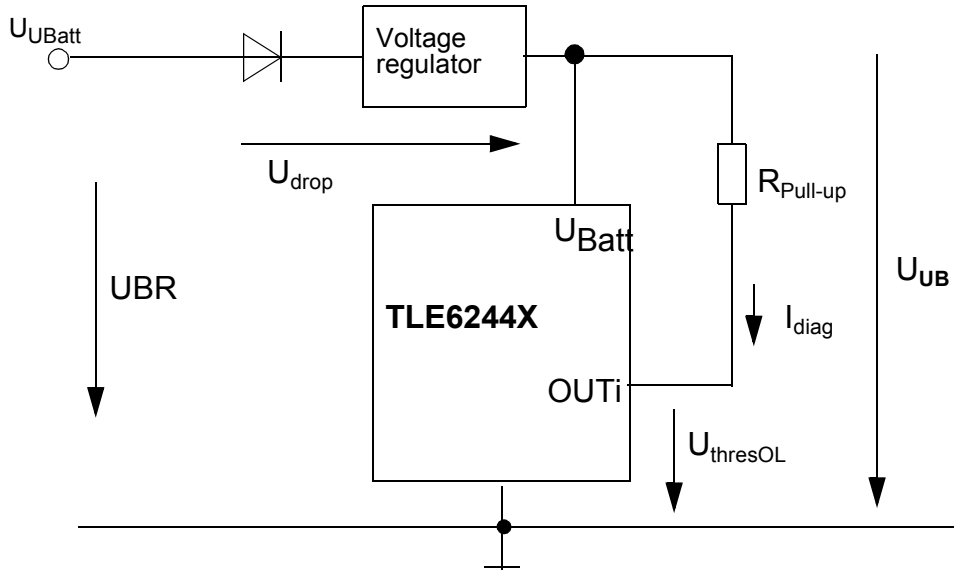

$$R_{Pull\text{-}up,max} = (UBR_{min} - U_{drop,max} - U_{thresOL,max}) / I_{diag,max}$$

UBR_{min} is the required minimum battery voltage for diagnostic function of the ECU. The drop voltage is composed of the drop voltage of the regulator and the drop voltage of the reverse protection circuit of the regulator resp. the forward voltage of a reverse protection diode.

Attention:
This equation also applies to power switches that are used as signal drivers (pull up resistor inside ECU or outside ECU): the permissible pull up resistance without a wrong diagnostic information is calculated by the same equation. On dimensioning the pull up resistance in combination with the diagnostic current, in applications as signal drivers attention must be paid especially to the required high level (also for low battery voltage).

1.9 Timing Diagram of the Power Outputs

1.9.1 Power Stages

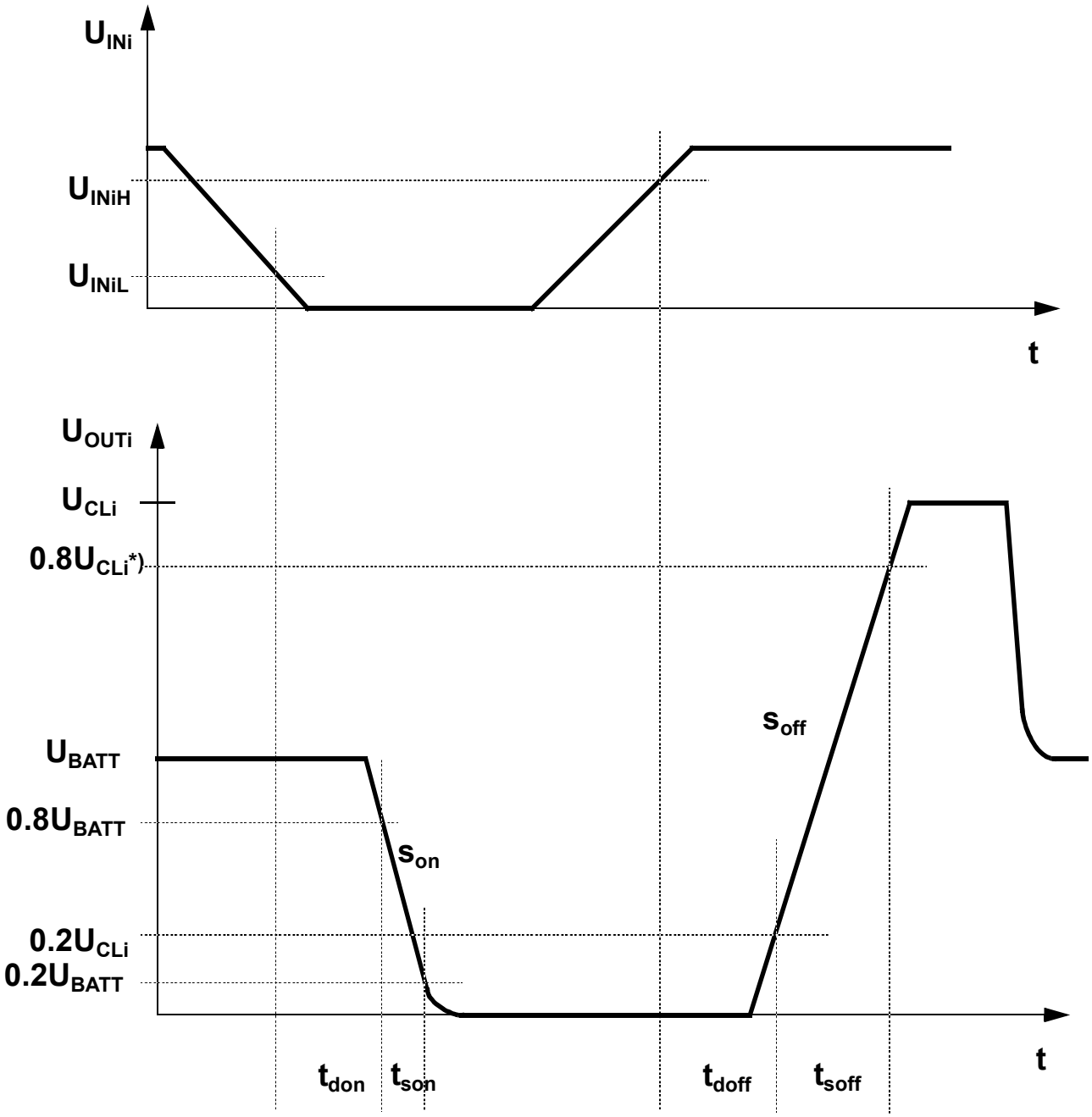

If the output is controlled via SPI the timing starts with the positive slope at SS
If the output is controlled by the µsec-bus, the timing starts with the pos. slope of SSY
*) With ohmic load, UCLi = UBatt

1.10 VDD-Monitoring

Overview:

The VDD-monitoring generates a „low“ signal at the bidirectional pin $\overline{ABE}$ if the 5V supply voltage at pin VDD is out of the permissible range of 4.5V...5.5V. On $\overline{ABE}$ = low the power stages of TLE6244X are switched off. Exception: OUT8 is not switched off in case of parallel control via IN8 by the VDD monitoring undervoltage threshold, but by a threshold of 3.5V at VDD.
On shorting pin $\overline{ABE}$ to V_{DD} or UBATT (≤ 36V), the power stages will be switched off in case of undervoltage or overvoltage at pin VDD in spite of $\overline{ABE}$ = high.
The behavior of the $\overline{ABE}$ level on the return of VDD out of the undervoltage range into the correct range is not configurable. At the transition from undervoltage to normal voltage the signal at pin $\overline{ABE}$ goes high after a filtering time is expired. The behavior of the $\overline{ABE}$ level on the return of VDD out of the overvoltage range into the correct range is configurable in STATCON_REG, Bit5. At the transition from overvoltage to normal voltage the signal at pin $\overline{ABE}$ goes high either after a filtering time (OV not latched) or after a SPI writing instruction (OV latched, state after reset).
On undervoltage condition the signal at pin $\overline{ABE}$ goes high after a filtering time is expired. On overvoltage condition pin $\overline{ABE}$ goes high either after a filtering time or after a SPI writing instruction. Before this SPI instruction is sent to TLE6244X appropriate tests can be carried out by the controller.
If the voltage at pin VDD is below the lower limit or is resp. was above the upper limit, this can be read out by the SPI instruction RD_STATCON.
VDD-monitoring has **no** influence on SCON_REGx, MUX_REGx, DIA_REGx, CONFIG and INP_REGx.
If output stages are switched off by the internal over-/undervoltage detection or by externally applying a low signal at the $\overline{ABE}$ pin, no failure storage (DIAREG1...5) may occur.

Description in Detail:

Description of the Register:
STATCON_REG

Bit 7 1: Normal operation
0: Test of VDD threshold
Access by controller: read/write
State of reset: 1

Bit 6 1: Testing the lower threshold (if bit 7 = 0)
0: Testing the upper threshold (if bit 7 = 0)
Access by controller: read/write
State of reset: 1

Bit 5 1: $\overline{ABE}$ latched after overvoltage
0: $\overline{ABE}$ deactivated immediately after the disappearance of the overvoltage
Access by controller: read/write
State of reset: 1

Bit 2 Reading out the level at pin $\overline{ABE}$
Access by controller: read only

Bit 1 1: no undervoltage at pin VDD
0: undervoltage at pin VDD
Access by controller: read only

Bit 0 1: no overvoltage at pin VDD
0: overvoltage at pin VDD resp. state of overvoltage still stored
Access by controller: read only

Testing the VDD-Monitoring:

Upper threshold:
By writing $000xxxxx_b$ in the register STATCON_REG the overvoltage threshold is reduced by 0.8V. In STATCON_REG Bit 0 has to be LOW then.
After writing $110xxxxx_b$ in the register STATCON_REG Bit 0 in STATCON_REG must be HIGH again.

Lower threshold:
By writing $010xxxxx_b$ in the register STATCON_REG the overvoltage threshold is increased by 0.8V. In STATCON_REG Bit 1 has to be LOW then.
After writing $110xxxxx_b$ in the register STATCON_REG Bit 1 in STATCON_REG must be HIGH again.

Example of configuration:

Requirement: After overvoltage $\overline{ABE}$ is to be LOW;
After overvoltage a self-test is carried out by the ECU, afterwards $\overline{ABE}$ is deactivated.

Register STATCON_REG is set to $111xxxxx_b$ during driving cycle.
When $\overline{ABE}$ becomes active, overvoltage can be detected by reading out STATCON_REG.
After the ECU's self-test a reset condition is achieved by writing $110xxxxx_b$ into the register STATCON_REG. This reset is only possible after disappearance of the overvoltage condition because the set input is dominant. The reset signal is withdrawn by writing $111xxxxx_b$.

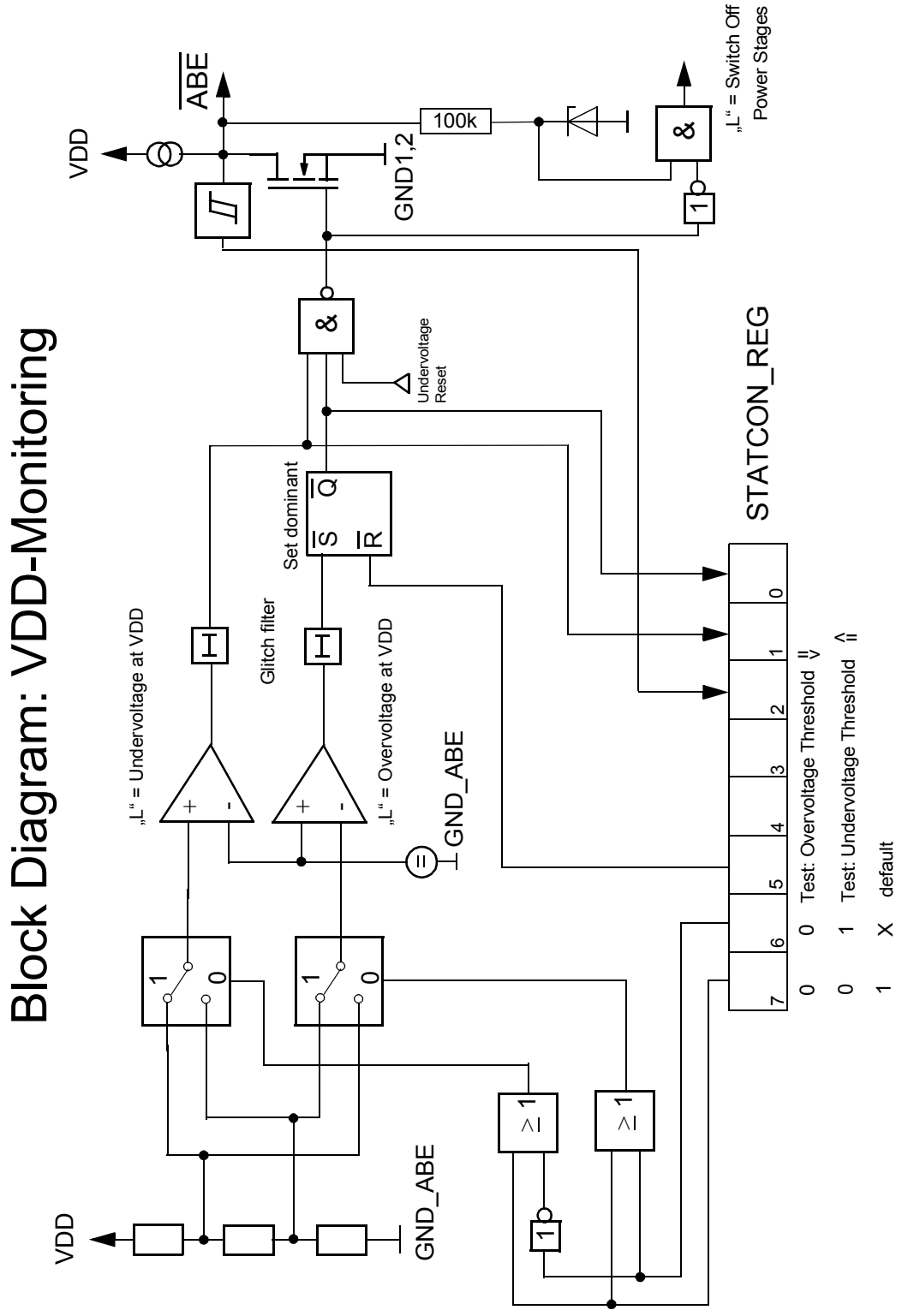
Block Diagram: VDD-Monitoring
VDD
ABE
100k
GND1,2
„L“ = Switch Off
Power Stages
Undervoltage
Reset
Set dominant
Glitch filter
„L“ = Undervoltage at VDD
„L“ = Overvoltage at VDD
GND_ABE
STATCON_REG
0 0 Test: Overvoltage Threshold
0 1 Test: Undervoltage Threshold
1 X default
VDD
GND_ABE

1.11 Notes for the Application in Commercial Vehicles

For electric systems with 24V battery voltage, that can even increase to ≥ 37V in case of load dump, some peculiarities have to be observed!

The static voltage at pin UBatt without destruction is limited to 37V, therefore this pin must either be connected to the 5V supply voltage VDD or else the voltage at pin UBatt has to be limited by adequate external circuitry. By connecting pin UBatt to VDD the values of $R_{ds,\ on}$ of the power switches will increase up to 20%.

The power stages 7...18 are equipped with a 40V active clamping. Therefore this power stages must only drive loads with an accordingly high resistance that can be switched on in case of overvoltage (e.g. a maximum load dump voltage of 60V and a load resistor of 1kΩ result in a power dissipation of 0.8W for each power stage. For all of the 12 power stages together there is a power dissipation of 9.6W for the typical duration of a load dump of 500ms.).

The restrictions listed above are no longer relevant in case of a „overvoltage-protected battery voltage“within the 24V electric system that limits the voltage to e.g. a maximum of 37V.

The thresholds of the currents, on which the power stages are switched off in case of overload, are increased by approximately 25% if there is a voltage at pin UBatt higher than19V (reason: jump start requirements in 12V electric systems). Exception: OUT9 and OUT10 and OUT15... OUT18. See characteristics in chapters 3.5.3, 3.6.3, 3.7.3 and 3.8.3.
The restrictions concerning overload of power stages (see 3.5.2, 3.6.2, 3.7.2 and 3.8.2) and permissible clamping energy (see 3.5.8, 3.6.8, 3.7.8 and 3.8.8) are relevant further on.

1.11.1 Notes for short circuit limitation

The power stages are short circuit protected for the following conditions:
The max. voltage at the output pins are limited to 36V and the TLE6244 is not operating in the booster mode.
The power stages will be switched on/off with a max. frequency of 1 kHz.
Only a 40 msec burst with the 1 kHz on/off-frequency is allowed, with a minimum burst repetition time of 1 sec. The maximum number of burst repetition cycles is 25. The number of driving cycles under these conditions is limited to 100 in lifetime. The temperature of the slug of the PG-MQFP-64
package must not exceed 130°C.
These limitations are valid for UBatt > 24 V.
For Ubatt ≤ 24 V the number of driving cycles under these conditions is extended to 1000 in lifetime.

1.12 Notes for the Diagnostics

- SCB entry in DIA_REGx see diagrams in chapter 1.6.4.

- In case of overvoltage at pin VDD (VDD > 5,5V) the diagnostic information can be wrong. In that case, the diagnostic information has to be cleared with the DEL_DIA instruction.

- The filtering time restarts when the output voltage passes the diagnostic threshold for short to ground (SCG).

- Diagram of the typical diagnostic current:

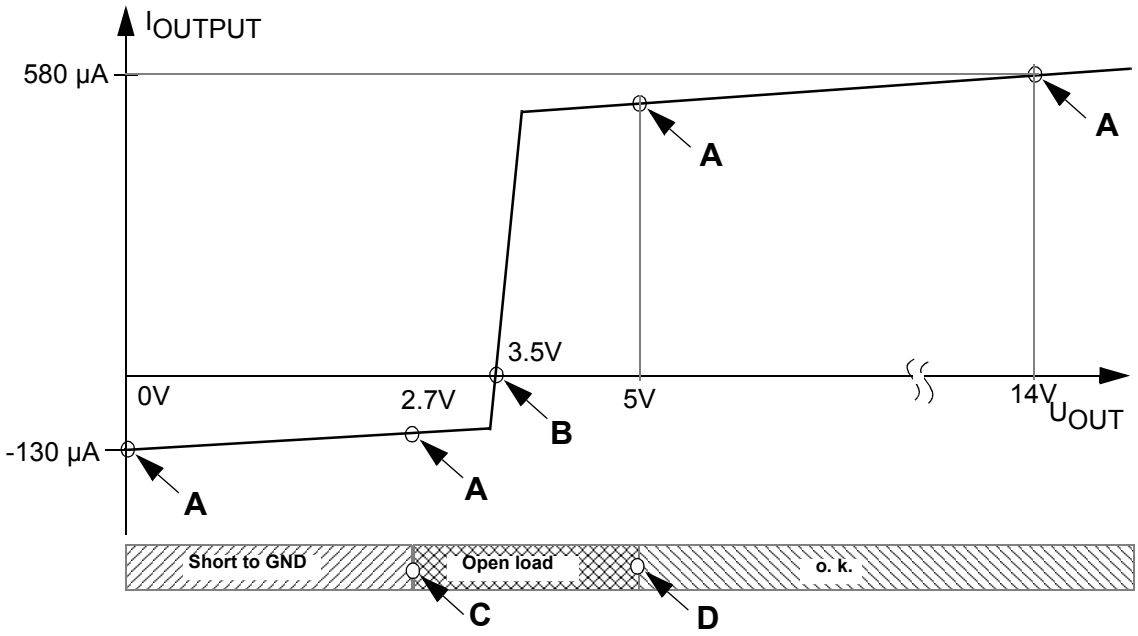

A: Diagnostic current (see 3.11.3)
B: Bias Voltage Open Load (see3.11.2)
C: Short to GND Threshold (see 3.11.1.2)
D: Open load Threshold (see 3.11.1.1)

State Diagram of the Power Stages Diagnostics

Exemplary for a power stage controlled by input pin INx. Diagram is accordingly valid for serial control via SPI or µsec-bus. The SPI instruction DEL_DIA deletes all fault registers in any state. On active reset resp. active $\overline{ABE}$ (VDD is out of range) output OUTx is switched off. After reset the power stage is in state A (except OUT8).

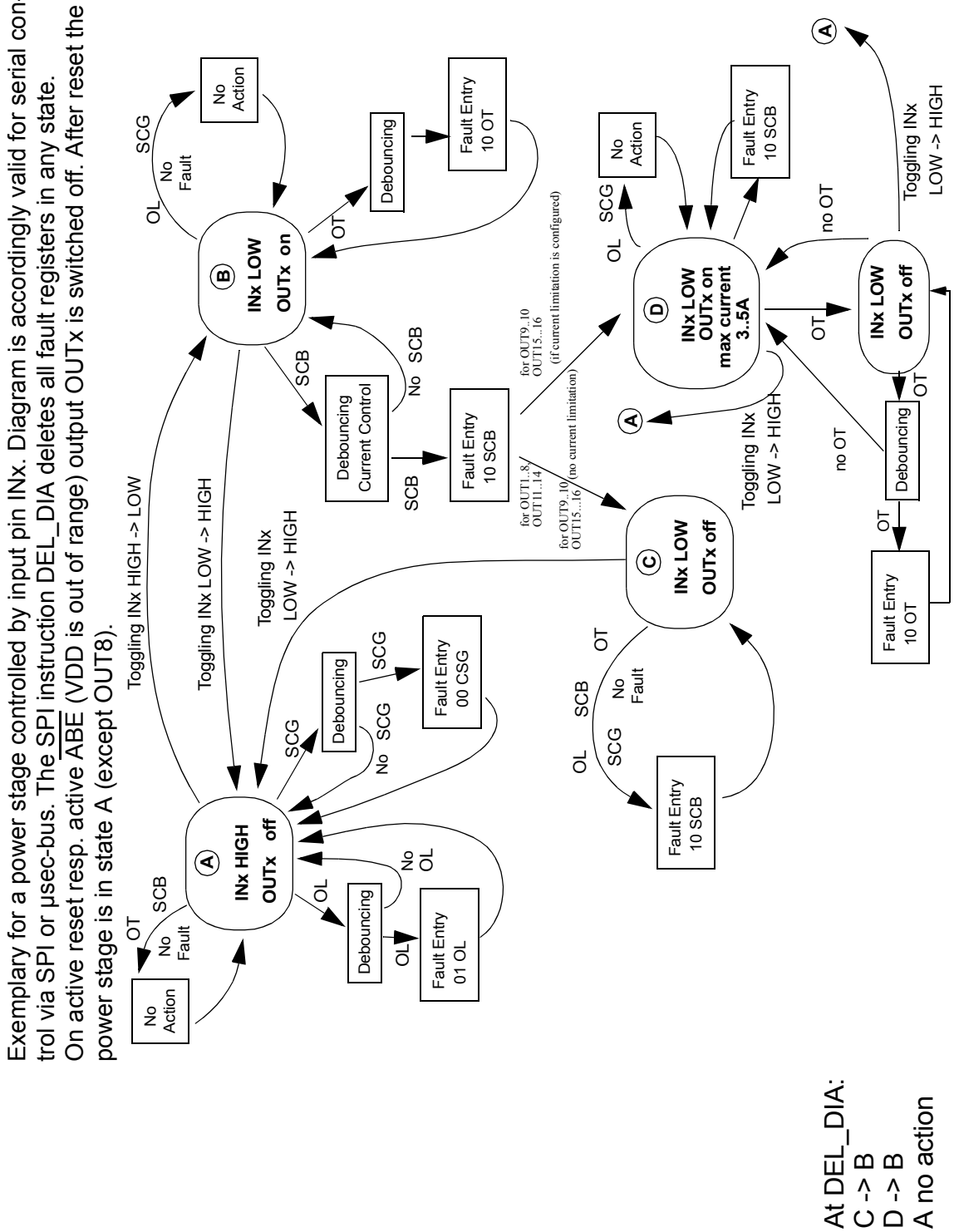

1.13 Parallel Connection of Power Stages

The power stages (PS) which are connected in parallel have to be switched on and off simultaneously. The corresponding SPI-Bits SCONx have to be in the same register (see page 15), when the PS are serial controlled via SPI.
In case of overload the ground current and the power dissipation are increasing. The application has to take into account that all maximum ratings are observed (e.g. operating temperature T_J and total ground current I_{GND}, see page 36, 37).
Max. number of parallel connections: 3

The following statements apply to PS within the same TLE6244X

The max. short circuit shutdown threshold of the parallel connected PS is the summation of the corresponding max. values of the PS ($I_{SC,OUTx} + I_{SC,OUTy} + ...$).

	Max. Nominal Current	Max. Clamping Energy	On Resistance
2 symmetrical PS (see note 1)	$0.9 \times (I_{max,OUTx} + I_{max,OUTy})$	$0.75 \times (E_{Cl,OUTx} + E_{Cl,OUTy})$	$0.5 \times R_{on,OUTx,y}$
2 PS of the same type (see note 2)	$0.85 \times (I_{max,OUTx} + I_{max,OUTy})$	$0.75 \times (E_{Cl,OUTx} + E_{Cl,OUTy})$	$0.5 \times R_{on,OUTx,y}$
3 PS of the same type (see note 2)	$0,8 \times (I_{max,OUTx} + I_{max,OUTy} + I_{max,OUTz})$	$0,58 \times (E_{Cl,OUTx} + E_{Cl,OUTy} + E_{Cl,OUTz})$	$0.34 \times R_{on,OUTx,y,z}$
2 PS with the same nominal current, but different clamping voltage (application without free-wheeling-diode) (see note 3)	$0.7 \times (I_{max,OUTx} + I_{max,OUTy})$	Clamping energy of the PS with the lower clamping voltage	$\frac{R_{on,OUTx} \times R_{on,OUTy}}{R_{on,OUTx} + R_{on,OUTy}}$
2 PS with the same nominal current, but different clamping voltage (application with free-wheeling-diode) (see note 3)	$0.7 \times (I_{max,OUTx} + I_{max,OUTy})$	no clamping required	$\frac{R_{on,OUTx} \times R_{on,OUTy}}{R_{on,Ax} + R_{on,OUTy}}$
2 PS with the same clamping voltage, but different nominal current (see note 4)	$\text{Max}\begin{bmatrix} I_{max,OUTx} \\ I_{max,OUTy} \\ 0.75 \times (I_{max,OUTx} + I_{max,OUTy}) \end{bmatrix}$	$\text{Min}\begin{bmatrix} E_{Cl,OUTx} \\ E_{Cl,OUTy} \end{bmatrix}$	$\frac{R_{on,OUTx} \times R_{on,OUTy}}{R_{on,OUTx} + R_{on,OUTy}}$
2 PS with different nominal current and different clamping voltage (see note 5)	$\text{Max}\begin{bmatrix} I_{max,OUTx} \\ I_{max,OUTy} \end{bmatrix}$	Clamping energy of the PS with the lower clamping voltage	$\frac{R_{on,OUTx} \times R_{on,OUTy}}{R_{on,OUTx} + R_{on,OUTy}}$

note 1: For every PS there exists only one symmetrical PS
OUT1 and OUT2 are symmetrical PS.
OUT3 and OUT4 are symmetrical PS.
...
OUT17 and OUT18 are symmetrical PS.

note 2: PS of the same type have the same nominal current and the same clamping voltage

note 3: Parallel connection of PS-type 2,2A/45V with type 2,2A/70V

note 4: Parallel connection of PS-type 2,2A/45V with type 3.0A/45V or
Parallel connection of PS-type 1.1A/45V with type 2,2A/45V

note 5: Parallel connection of PS-type 2,2A/70V with type 1.1A/45V or
Parallel connection of PS-type 2,2A/70V with type 3.0A/45V

If the power stages are configured for static current limitation the max. current limitation of the parallel connected PS is the summation of the corresponding max. values of the PS ($I_{SC,OUTx}$ + $I_{SC,OUTy}$ +....).

The following statements apply to Power Stages within different TLE6244X

The application has to take into account that all maximum ratings of each TLE6244X are observed.

2. Maximum Ratings

2.1 Definition of Test Conditions

The integrated circuit must not be destroyed if maximum ratings are reached. Every maximum rating is allowed to reach, as far as no other maximum rating is exceeded.

Unless otherwise indicated all voltages are referred to GND (GND pins 1...8 connected to each other)

Positive current flows into the pin.

2.2 Test Coverage (TC) in Series Production

In the standard production flow not all parameters can be covered due to technical or economic reasons. Therefore the following test coverage was defined:

A) Parameter test
B) Go/NoGo test (in the course of release qualification/characterization: parameter test)
C) Guaranteed by design (covered by lab tests, not considered within the standard production flow)

2.3 Thermal Limits

Operating temperature TLE6244

continuous	$-40°C \le T_J \le 150°C$
additionally only for the power switches (for 100h accumulated)	$150°C \le T_J \le 200°C$
Storage temperature	$-55°C \le T_C \le 125°C$
Thermal resistance	$R_{thJC} \le 2{,}5$ K/W

2.4 Electrical Limits

Limits must absolutely not be exceeded. By exceeding only one limit the integrated circuit might be destroyed.

Power Supplies U_{VDD} and U_{UBatt}

Static (without destruction) *)	$-0.3V \le U_{VDD} \le 36V$ $-0.3V \le U_{UBatt} \le 37V$
Dynamic <10µsec (without destruction)	$-0.5V \le U_{VDD} \le 36V$ $-0.5V \le U_{UBatt} \le 40V$

Dynamic (500 ms, 10 x in lifetime, without destruction) $-0.5V \le U_{UBatt} \le 40V$

*) $U_{VDD} \ge 5.5V$ is allowed only in case of error conditions! Not suitable for continuous operation.

SPI Output

Output voltage	$-0.3V \le U_{SO} \le 36V$

Output current	$I_{SO} \leq 5mA$

Outputs Low Side Switches

Static voltage (without destruction)	OUT1...6	≤ 64V
	OUT7..18	≤ 40V

Dynamic voltage without destruction after ISO/DIS7637-1, pulses 1 to 4

OUT1 to 6, OUT9 to16: via external load (e.g. 2W lamp)	≤ 2ms
OUT7, OUT8, OUT17 and OUT18: via external load	≤ 2ms

Ground Current

Total current GND1+2 (pins 26/27) (total ground current of OUT5,6,9,10,17,18)	$I_{GND1+2} \leq 18$ A
Total current GND3+4 (pins 58/59) (total ground current of OUT1,2,7,8,11,12,15,16)	$I_{GND3+4} \leq 20$ A
Total current GND5+6 (pins 11/12) (total ground current of OUT3,13)	$I_{GND5+6} \leq 6$ A
Total current GND7+8 (pins 41/42) (total ground current of OUT4,14)	$I_{GND7+8} \leq 6$ A

Attention: Even if all ground pins are connected with each other on the PCB the total ground currents I_{GND1+2} and I_{GND3+4} and I_{GND5+6} and I_{GND7+8} must not be exceeded.

The 4 ground pins GND1...4 are internally connected to the heat sink via an unspecified rivet joint. Therefore it is advisable to short-circuit the 4 ground pins on the PCB and to connect them with the heat sink. In addition the 4 ground pins GND5..8 must be connected to the other ground pins on the PCB

Inputs of the Power Switches, SPI Inputs, Reset and Shut-off of the Power Stages

Input voltage	$-0.3V \leq U_{INi,\overline{RST},\overline{SS},SI,SCK,\overline{ABE}} \leq 36V$
Input currents	see 3.4.4 , 3.9.1 , 3.9.2 , 3.9.3 , 3.13.2

Pin $\overline{RST}$

Minimum reset duration (Power-On)	15 ms
Input currents	see 3.4.4

3. Electrical Characteristics

3.1 Operating Range (see also 3.13 VDD-monitoring $\overline{ABE}$)	Out of this range the power stages can be shut off by the VDD-monitoring except OUT8						
	Voltage referred to GND_$\overline{ABE}$		U_{VDD}	4.7		5.3	V
	Minimum reset duration (Power-On)		$t_{\overline{RST},min}$	15			ms
	Minimum reset duration in operation mode $4.5V \le U_{VDD} \le 5.5V$		$t_{\overline{RST},min}$	1			µs
3.2 Validity of Parameters	Parameters are valid for $4.5V \le U_{VDD} \le 5.5V$, $4.5V \le U_{UBatt} \le 37V$ TLE6244: $-40°C \le T_J \le 150°C$ and 2 power stages in current limitation unless otherwise noted. If VDD-monitoring is active the power stages are switched off except OUT8 (see page 28). Positive current flows into the pin, negative current flows out of the pin. Unless otherwise noted all voltages are referred to GND (GND1...8 connected with each other).						
	If the U_{VDD} falls below this trashed the power stages (except OUT8) are switched off. If U_{VDD} rises above this threshold the power stages work regularly after a delay time of 250 µsec.		U_{VDD}	3.5	4.2	4.5	V
	Threshold for shut off of OUT8: If U_{VDD} rises above this threshold the power stages work regularly after a delay time of 250 µsec.		U_{VDD}			3.5	V
	Supply voltage		U_{VDD}	4.5		5.5	V

3.3 Power Consumption	$U_{VDD} \leq 5.5V$	A	I_{VDD}			20	mA
	5,5 V < UVDD < 36 V (IC is not destroyed)	C	I_{VDD}			50	mA
	U_{UBatt} = 14V	A	I_{UBatt}			3	mA
	U_{UBatt} = 28V	A	I_{UBatt}			4	mA
	$U_{UBatt} \leq U_{VDD}$	A	I_{UBatt}			1	mA
	Power consumption in standby mode in case of missing U_{VDD}, $U_{UBatt} \leq 14V$	A	I_{UBatt}			200	µA
3.4 Inputs of the Power Stages and Reset IN1...IN16, $\overline{RST}$	Outputs are switched off if inputs are open (parallel control).						
3.4.1 Low Level	Reset not active, Power stage on for	B	$U_{\overline{RSTL}}$			1.0	V
	i = 1...5, 9...15	B	U_{INiL}			1.0	V
	i = 6, 7, 16	B	U_{INiL}			1.0	V
	Power stage off for i = 8	B	U_{INiL}			1.0	V
3.4.2 High Level	Power stage off for	B	$U_{\overline{RSTH}}$	1.7			V
	i = 1...7, 9...16	B	U_{INiH}	2.0			V
							V
	Power stage on for i = 8	B	U_{INiH}	2.0			V
3.4.3 Hysteresis		C	ΔU_{INi}, $\Delta U_{\overline{RST}}$	0.1		0.6	V
3.4.4 Input Currents In, RST	$-0.3V \leq U_{INi,\overline{RST}} \leq U_{VDD}$ (i = 1...7, 9...16)	A/B	$I_{INi,\overline{RST}}$	-100		5	µA
	$U_{VDD} \leq U_{INi} \leq 36$ V (i = 1...7, 9...16)	C	$\|I_{INi}\|$			5	µA
	$-0.3V \leq U_{IN8} \leq U_{VDD}$	A/B	I_{IN8}	-100		100	µA
	$0.8V \leq U_{IN8} \leq U_{VDD}$, pull down	A	I_{IN8}	20	40	100	µA
	$U_{VDD} \leq U_{IN8} \leq 36$ V, pull down	C	I_{IN8}	20	40	100	µA
	$0V \leq U_{\overline{RST}} \leq U_{VDD}$ - 1.7V, pull up	A	$-I_{\overline{RST}}$	20	40	100	µA
	$0V \leq U_{INi} \leq U_{VDD}$ - 1.7V, pull up (i = 6,7,16)	A	$-I_{INi}$	5	10	20	µA
	Bit BMUX = 1 (CONFIG_REG): $0V \leq U_{INi} \leq U_{VDD}$ - 1.7V, pull up (i = 1..5, 9..15)	A	$-I_{INi}$	20	40	100	µA
	Bit BMUX = 0 (CONFIG_REG): $0V \leq U_{INi} \leq U_{VDD}$, high-impedance (i = 1..5, 9..15)	A	$\|I_{INi}\|$			1	µA

3.4.5 Input Protection INi	Input clamping at INi (i = 1...16): No malfunction during clamping. Max. clamping current (externally limited) static dynamic (t < 2ms) Max. clamping voltage I_{INi} = -5mA I_{INi} = +2mA (t < 2ms) External current limitation at INi is only provided if µsec-bus control is used. In that case INi are used as digital inputs. If µsec-bus is not used, there is no external resistor for current limitation. See 2.4 “Inputs of the Power Switches, SPI Inputs...”	 C C C C	 $\|I_{INi}\|$ $\|I_{INi}\|$ U_{INi} U_{INi}	 -3 40	 	 2 5 70	 mA mA V V
3.5 Power Outputs 2.2A/70V OUT1...6	In case of open input (parallel control) or missing power supply the power stage is switched off. Parallel connection of power stages is possible.						
3.5.1 Nominal Current		C	$I_{OUT1..6}$			2.2	A
3.5.2 Extended Current Range	$I_{OUT1...6}$ > 2.2A Accumulated operating time	 C	 	 	 	 100	 h
3.5.3 Maximum Current (Short Circuit Shut- down Threshold)	4.5V ≤ U_{UBatt} ≤ 17V T_J = -40°C T_J = 150°C U_{UBatt} ≥ 21V T_J = -40°C T_J = 150°C Above this limit short circuit to UBatt is detected. For the duration of the shutoff delay time t_{Voff} (see 3.5.4) the output current is limited to approximately this value. If the short circuit condition is still present after t_{Voff}, the output is switched off. An error is stored after t_{Diag} (see 3.11.4).	 B A B A	 $I_{OUT1..6}$ $I_{OUT1..6}$ $I_{OUT1..6}$ $I_{OUT1..6}$	 2.4 2.2 3 2.7	 	 4.0 3.7 5.0 4.6	 A A A A

	Between -40°C and 150°C an approximately linear characteristic line can be assumed for the short circuit shutdown threshold. Between 17V ≤ U_{UBatt} ≤ 21V, the short circuit shutdown threshold is switched. A power stage that is switched off in case of SCB can be switched on again by an off/on cycle at the corresponding input pin resp. by the change of the state of the corresponding SPI bit SCONx (see page 16), by the µsec-Bus, by a DEL_DIA instruction or can be released again by reset. If the fault register is cleared before this release (by a DEL_DIA instruction), a new fault entry of SCB is immediately carried out, even if SCB condition is no longer present.						
3.5.3.1 Maximum Battery Voltage at Short Circuit to Battery	See Note 1.11.1	C	$U_{OUT\ 1..6}$	36			V
3.5.4 Shutoff Delay	Shutoff delay of the power stages after detection of SCB	B	t_{Voff}	60		215	µs
3.5.5 On Resistance	OUT1,2,5,6: T_J = 25°C	A	$R_{on1,2,5,6}$	220	320	400	mΩ
	OUT1,2,5,6: T_J = 150°C	A	$R_{on1,2,5,6}$	420	600	750	mΩ
	OUT1,2,5,6: T_J = -40°C	A	$R_{on1,2,5,6}$	180	250	310	mΩ
	OUT3,4: T_J = 25°C	A	$R_{on3,\ 4}$	210	300	380	mΩ
	OUT3,4: T_J = 150°C	A	$R_{on3,\ 4}$	410	580	720	mΩ
	OUT3,4: T_J = -40°C	A	$R_{on3,\ 4}$	170	240	300	mΩ
	For U_{UBatt} ≤ 10V R_{on} is increased up to 20%.						
3.5.6 On/off Delay Times	„On“	B	$t_{don1...6}$			10	µs
		B	$t_{son1...6}$			5	µs
	„Off“	B	$t_{doff1...6}$			10	µs
	(Measurement with ohmic load)	C	$t_{soff1...6}$			10	µs
	$\|t_{don} - t_{doff}\|$	C	Δt_d			5	µs
	switch-on slew rate	C	$s_{on1...6}$			15	V/µs
	switch-off slew rate	C	$s_{off1...6}$			21	V/µs

3.5.7 Leakage Current	U_{VDD} = 0V, $U_{OUT1...6}$ = 14V (leakage current of the DMOS, diagnostic current = 0)	A	$I_{OUT1..6}$			50	µA
	U_{VDD} = 0V, $U_{OUT1...6}$ = 24V (leakage current of the DMOS, diagnostic current = 0)	A	$I_{OUT1..6}$			200	µA
3.5.8 Clamping							
3.5.8.1 Clamping Voltage	$I_{OUT1...6}$ = 0.2A	A	$U_{OUT1..6}$	64		76	V
3.5.8.2 Matching of the Clamping Voltage	Between different outputs with identical inductive loads	A	ΔU			3	V
3.5.8.3 Maximum Clamping Energy $T_C \leq 110°C$	Linear decreasing current, f_{max} = 50Hz (see diagrams E = f(I) on page 66)						
	$I_{OUT1...6} \leq 2.2A$	C	E			8.5	mJ
	$I_{OUT1...6} \leq 1.0A$	C	E			19	mJ
	$I_{OUT1...6} \leq 0.5A$	C	E			30	mJ
3.5.8.4 Maximum Clamping Energy $T_C \leq 60°C$	Linear decreasing current, f_{max} = 50Hz						
	$I_{OUT1...6} \leq 2.2A$	C	E			10.8	mJ
	$I_{OUT1...6} \leq 1.0A$	C	E			22	mJ
	$I_{OUT1...6} \leq 0.5A$	C	E			36	mJ
3.5.8.5 Maximum Clamping Energy with two Outputs connected in parallel	Each output 75% of the values of 3.5.8.3 resp. 3.5.8.4	C					
3.5.8.6 Maximum Clamping Energy at Load Dump	For a maximum of 10 times during ECU life (load dump with 400ms and R_i = 2Ω over the load, e.g. 2W lamp)	C	E			50	mJ
3.5.8.7 Jump Start	Each output 150% of the values of 3.5.8.4. For a maximum of 10 jump starts of 2 minutes each during ECU life.	C					
3.5.8.8 Singlepulse $T_C \leq 60°C$	$I_{OUT1...6} \leq 0.6A$, max 10 000 pulse	C	E			50	mJ

3.6 Power outputs 2.2A/45V OUT9...OUT14	In case of open input (parallel control) or missing power supply the power stage is switched off. Parallel connection of power stages is possible.						
3.6.1 Nominal Current		C	$I_{OUT9...14}$			2.2	A
3.6.2 Extended Current Range	I_{OUTi} > 2.2A						
	Accumulated operating time	C				100	h
3.6.3 Maximum Current (Short Circuit Shut down Threshold)	4.5V ≤ U_{UBatt} ≤ 17V for OUT11..14 4.5V ≤ U_{UBatt} for OUT9/10						
	T_J = -40°C	B	I_{OUTi}	2.4		3.8	A
	T_J = 150°C	A	I_{OUTi}	2.2		3.7	A
	U_{UBatt} > 21V for OUT11...14						
	T_J = -40°C	B	I_{OUTi}	3		5	A
	T_J = 150°C	A	I_{OUTi}	2.7		4.6	A
	For OUT11... OUT14 Above this limit short circuit to UBatt is detected. For the duration of the shutoff delay time t_{Voff} (see 3.6.4) the output current is limited to approximately this value. If the short circuit condition is still present after t_{Voff}, the outputs OUT11...OUT14 are switched off. An error is stored after t_{Diag} (see 3.11.4). The same is true for OUT9, OUT10 if the static current limitation is not enabled.						
	Between -40°C and 150°C an approximately linear characteristic line can be assumed.						
	Between 17V ≤ U_{UBatt} ≤ 21V, the short circuit shutdown threshold is switched for OUT11..14						

	A power stage that is switched off in case of SCB can be switched on again by an off/on cycle at the corresponding input pin resp. by the change of the state of the corresponding bit for SPI or µsec-bus by a DEL_DIA instruction or can be released again by reset. If the fault register is cleared before this release (by a DEL_DIA instruction), a new fault entry of SCB is immediately carried out, even if SCB condition is no longer present. **For OUT9, OUT10** Above this limit short circuit to UBatt is detected. The output current is limited to approximately this value if the static current limitation is configured. An error is stored after t_{Diag} (see 3.11.4). If the operation leads to an overtemperature condition, a second protection level (about 170°C) will change the output into a low duty cycle PWM (selective thermal shutdown with restart) to prevent critical chip temperatures Between -40°C and 150°C an approximately linear characteristic line can be assumed.						
3.6.3.1 Maximum Battery Voltage at Short Circuit to Battery	See Note 1.11.1	C	U_{OUT} 9..14	36			V
3.6.4 Shutoff Delay	Shutoff delay of the power stages after detection of KSUB. For the duration of t_{Voff} current is limited to maximum current.	B	t_{Voff}	60		215	µs
3.6.5 On Resistance	T_J = 25°C T_J = 150°C T_J = -40°C For $U_{UBatt} \leq$ 10V R_{on} is increased up to 20%.	A A A	R_{on9-14} R_{on9-14} R_{on9-14}	200 380 150	300 550 220	380 680 280	mΩ mΩ mΩ

3.6.6 On /off Delay Times	„On“	B	t_{don}			10	µs
		B	t_{son}			5	µs
	„Off“	B	t_{doff}			10	µs
	(Measurement with ohmic load)	C	t_{soff}			10	µs
	$\|t_{don} - t_{doff}\|$	C	Δt_d			5	µs
	switch-on slew rate	C	s_{on}			20	V/µs
	switch-off slew rate	C	s_{off}			25	V/µs
3.6.7 Leakage Current	U_{VDD} = 0V, $U_{OUT9...14}$ = 14V (leakage current of the DMOS, diagnostic current = 0)	A	I_{OUTi}			50	µA
	U_{VDD} = 0V, $U_{OUT9...14}$ = 24V (leakage current of the DMOS, diagnostic current = 0)	A	I_{OUTi}			200	µA
3.6.8 Clamping							
3.6.8.1 Clamping Voltage	I_{OUTi} = 0.2A	A	$U_{9...14}$	40	45	50	V
3.6.8.2 Maximum Clamping Energy $T_C \leq 110°C$	Linear decreasing current, f_{max} = 30Hz (see diagrams E = f(I) on page 66)						
	$I_{OUT9...14} \leq 2.2A$	C	E			14	mJ
	$I_{OUT9...14} \leq 1.0A$	C	E			30	mJ
3.6.8.3 Maximum Clamping Energy $T_C \leq 60°C$	Linear decreasing current, f_{max} = 30Hz						
	$I_{OUT9...14} \leq 2.2A$	C	E			17	mJ
	$I_{OUT9...14} \leq 1.0A$	C	E			36	mJ
3.6.8.4 Maximum Clamping Energy with two Outputs connected in parallel	Each output 75% of the values of 3.6.8.2 resp. 3.6.8.3.	C					
3.6.8.5 Maximum Clamping Energy at Load Dump	For a maximum of 10 times during ECU life (load dump with 400ms and R_i = 2Ω over the load, e.g. 2W lamp)	C	E			50	mJ
3.6.8.6 Jump Start	Each output 150% of the values of 3.6.8.3. For a maximum of 10 jump starts of 2 minutes each during ECU life.	C					
3.6.8.7 Single pulse $T_C \leq 60°C$	$I_{OUT9...14} \leq 0.6A$, max 10 000 pulse	C	E			50	mJ

3.7 Power outputs 3.0A/45V OUT15...OUT16	In case of open input (parallel control) or missing power supply the power stage is switched off. Parallel connection of power stages is possible.						
3.7.1 Nominal Current		C	I_{OUT15} I_{OUT16}			3.0	A
3.7.2 Extended Current Range	$I_{OUT15,16}$ > 3.0A						
	Accumulated operating time	C				100	h
3.7.3 Maximum Current (Short Circuit Shut down threshold)	$U_{UBatt} \geq 4.5V$ T_J = -40°C T_J = 150°C	B A	I_{OUT15} I_{OUT16}	3.3 3		6 5.5	A A
	Above this limit short circuit to UBatt is detected. For the duration of the shutoff delay time t_{Voff} (see 3.6.4) the output current is limited to approximately this value. If the short circuit condition is still present after t_{Voff}, the outputs OUT15/16 are switched off if the static current limitation is not enabled. An error is stored after t_{Diag} (see 3.11.4).						
	Above this limit short circuit to UBatt is detected. The output current is limited to approximately this value if the static current limitation is configured. An error is stored after t_{Diag} (see 3.11.4). If the operation leads to an overtemperature condition, a second protection level (about 170°C) will change the output into a low duty cycle PWM (selective thermal shutdown with restart) to prevent critical chip temperatures.						
	Between -40°C and 150°C an approximately linear characteristic line can be assumed.						
3.7.3.1 Maximum Battery Voltage at Short Circuit to Battery	See Note 1.11.1	C	U_{OUT} 15,16	36			V
3.7.4 Shuttoff Delay	Shutoff delay of the power stages after detection of SCB. For the duration of t_{Voff} current is limited to maximum current.	B	t_{Voff}	60		215	µs

3.7.5 On Resistance	T_J = 25°C:	A	$R_{on15,16}$	150	220	280	mΩ
	T_J = 150°C:	A	$R_{on15,16}$	270	390	480	mΩ
	T_J = -40°C:	A	$R_{on15,16}$	120	170	210	mΩ
	For $U_{UBatt} \leq$ 10V R_{on} is increased up to 20%.						
3.7.6 On /off Delay Times	„On“	B	t_{don}			10	µs
		B	t_{son}			5	µs
	„Off“	B	t_{doff}			10	µs
	(Measurement with ohmic load)	C	t_{soff}			10	µs
	$\|t_{don} - t_{doff}\|$	C	Δt_d			5	µs
	switch-on slew rate	C	s_{on}			20	V/µs
	switch-off slew rate	C	s_{off}			25	V/µs
3.7.7 Leakage Current	U_{VDD} = 0V, $U_{OUT15,16}$ = 14V (leakage current of the DMOS, diagnostic current = 0)	A	$I_{OUT15,16}$			50	µA
	U_{VDD} = 0V, $U_{OUT15,16}$ = 24V (leakage current of the DMOS, diagnostic current = 0)	A	$I_{OUT15,16}$			200	µA
3.7.8 Clamping							
3.7.8.1 Clamping Voltage	$I_{OUT15,16}$ = 0.2A		$U_{OUT15,16}$	40	45	50	V
3.7.8.2 Maximum Clamping Energy $T_C \leq$ 110°C	Linear decreasing current, f_{max} = 30Hz (see diagrams E = f(I) on page 67)						
	$I_{OUT15,16} \leq$ 3.0A	C	E			18	mJ
	$I_{OUT15,16} \leq$ 2.2A	C	E			20	mJ
	$I_{OUT15,16} \leq$ 1.5A	C	E			24	mJ
	$I_{OUT15,16} \leq$ 1.0A	C	E			40	mJ
3.7.8.3 Maximum Clamping Energy $T_C \leq$ 60°C	Linear decreasing current, f_{max} = 30Hz						
	$I_{OUT15,16} \leq$ 3.0A	C	E			20	mJ
	$I_{OUT15,16} \leq$ 1.0A	C	E			46	mJ
3.7.8.4 Maximum Clamping Energy with two Outputs connected in parallel	Each output 75% of the values of 3.7.8.2 resp. 3.7.8.3.	C					

3.7.8.5 Maximum Clamping Energy at Load Dump	For a maximum of 10 times during ECU life (load dump with 400ms and R_i = 2Ω over the load, e.g. 2W lamp)	C	E			50	mJ
3.7.8.6 Jump Start	Each output 150% of the values of 3.7.8.3. For a maximum of 10 jump starts of 2 minutes each during ECU life.	C					
3.7.8.7 Single pulse $T_C \leq 60°C$	$I_{OUT15,\ 16} \leq 0.6A$, max 10 000 pulses	C	E			50	mJ
3.8 Power Outputs 1.1A/45V OUT7,8, OUT17,18	In case of open input (parallel control) or missing power supply the power stage is switched off. Parallel connection of power stages is possible.						
3.8.1 Nominal Current	for OUT7, 8, 17, 18	C	I_{OUTi}			1.1	A
3.8.2 Extended Current Range	$I_{OUT7,8,17,18}$ > 1.1A						
	Accumulated operating time	C				100	h
3.8.3 Maximum Current (Short Circuit Shut down Threshold and static current limitation)	4.5V ≤ U_{UBatt} ≤ 17V for OUT7, 8 4.5V ≤ U_{UBatt} for OUT17,18						
	T_J = -40°C T_J = 150°C	B A	I_{OUTi} I_{OUTi}	1.2 1.1		2.2 2.0	A A
	U_{UBatt} > 21V only for OUT7,8 T_J = -40°C T_J = 150°C	B A	I_{OUTi} I_{OUTi}	1.5 1.3		2.5 2.3	A A
	For OUT7, OUT8 Above this limit short circuit to UBatt is detected. For the duration of the shutoff delay time t_{Voff} (see 3.8.4) the output current is limited to approximately this value. If the short circuit condition is still present after t_{Voff}, the outputs OUT7/8 are switched off. An error is stored after t_{Diag} (see 3.11.4). The same is true for OUT17 OUT18 if the static current limitation is not enabled.						

	Between -40°C and 150°C an approximately linear characteristic line can be assumed. Between 17V ≤ U_{UBatt} ≤ 21V, the short circuit shutdown threshold is switched for OUT7/8 A power stage that is switched off in case of SCB can be switched on again by an off/on cycle at the corresponding input pin resp. by the change of the state of the corresponding bit for SPI or µsec-bus by a DEL_DIA instruction or can be released again by reset. If the fault register is cleared before this release (by a DEL_DIA instruction), a new fault entry of SCB is immediately carried out, even if SCB condition is no longer present. **For OUT17, OUT18** Above this limit short circuit to UBatt is detected. The output current is limited to approximately this value if the static current limitation is configured. An error is stored after t_{Diag} (see 3.11.4). If the operation leads to an overtemperature condition, a second protection level (about 170°C) will change the output into a low duty cycle PWM (selective thermal shutdown with restart) to prevent critical chip temperatures Between -40°C and 150°C an approximately linear characteristic line can be assumed.						
3.8.3.1 Maximum Battery Voltage at Short Circuit to Battery	See Note 1.11.1	C	U_{OUT} 17,18	36			V
3.8.4 Shutoff Delay	Shutoff delay of the power stages after detection of SCB. For the duration of t_{Voff} current is limited to maximum current.	B	t_{Voff}	60		215	µs

3.8.5 On Resistance	T_J = 25°C	A	$R_{on7,8,17,18}$	400	620	780	mΩ
	T_J = 150°C	A	$R_{on7,8,17,18}$	780	1200	1500	mΩ
	T_J = -40°C	A	$R_{on7,8,17,18}$	290	450	560	mΩ
	For $U_{UBatt} \leq$ 10V R_{on} is increased up to 20%; condition: U_{VDD} > 4.5 V						
	For OUT8 only: 3.5V<(U_{VDD}, U_{UBatt})<4.5V						
	T_J = 25°C	A	R_{on}			1300	mΩ
	T_J = 150°C	A	R_{on}			2200	mΩ
	T_J = -40°C	A	R_{on}			1050	mΩ
3.8.6 On/off Delay Times	„On“	B	t_{don}			10	µs
		B	t_{son}			5	µs
	„Off“	B	t_{doff}			10	µs
	(Measurementwithohmicload)	C	t_{soff}			10	µs
	$\|t_{don} - t_{doff}\|$	C	Δt_d			5	µs
	Switch-on slew rate	C	s_{on}			25	V/µs
	Switch-off slew rate	C	s_{off}			40	V/µs
3.8.7 Leakage Current	For OUT7,8, OUT1718:						
	U_{VDD} = 0V, U_{OUTi} = 14V (leakage current of the DMOS, diagnostic current = 0)	A	I_{OUTi}			50	µA
	U_{VDD} = 0V, U_{OUTi} = 24V (leakage current of the DMOS, diagnostic current = 0)	A	I_{OUTi}			200	µA
3.8.8 Clamping	For OUT7,8, OUT17,18:						
3.8.8.1 Clamping Voltage	I_{OUTi} = 0.2A	A	U_{OUTi}	40	45	50	V
3.8.8.2 Maximum Clamping Energy $T_C \leq$ 110°C	Linear decreasing current, f_{max} = 10Hz (see diagrams E = f(I) on page 67)						
	$I_{OUTi} \leq$ 0.6A	C	E			10	mJ
	$I_{OUTi} \leq$ 1.1A	C	E			7	mJ
3.8.8.3 Maximum Clamping Energy $T_C \leq$ 60°C	Linear decreasing current, f_{max} = 10Hz						
	$I_{OUTi} \leq$ 0.6	C	E			12	mJ
	$I_{OUTi} \leq$ 1.1A	C	E			8.5	mJ

3.8.8.4 Maximum Clamping Energy with two Outputs connected in parallel	Each output 75% of the values of 3.8.8.2 resp. 3.8.8.3.	C					
3.8.8.5 Maximum Clamping Energy at Load Dump	For a maximum of 10 times during ECU life (load dump with 400ms and R_i = 2Ω over the load)	C	E			15	mJ
3.8.8.6 Jump Start	Each output 150% of the values of 3.8.8.3. For a maximum of 10 jump starts of 2 minutes each during ECU life	C					

3.9 SPI Interface

The timing of TLE6244X is defined as follows:
- The change at output (SO) is forced by the rising edge of the SCK signal.
- The input signal (SI) is sampled on the falling edge of the SCK signal.
- The data received during a writing access is taken over into the internal registers on the rising edge of the $\overline{SS}$ signal, if exactly 16 SPI clocks have been counted during $\overline{SS}$ = active.
(**Also:** Only if exactly 16 SPI clocks have been counted the instruction DEL_DIA resets the diagnostic registers.)

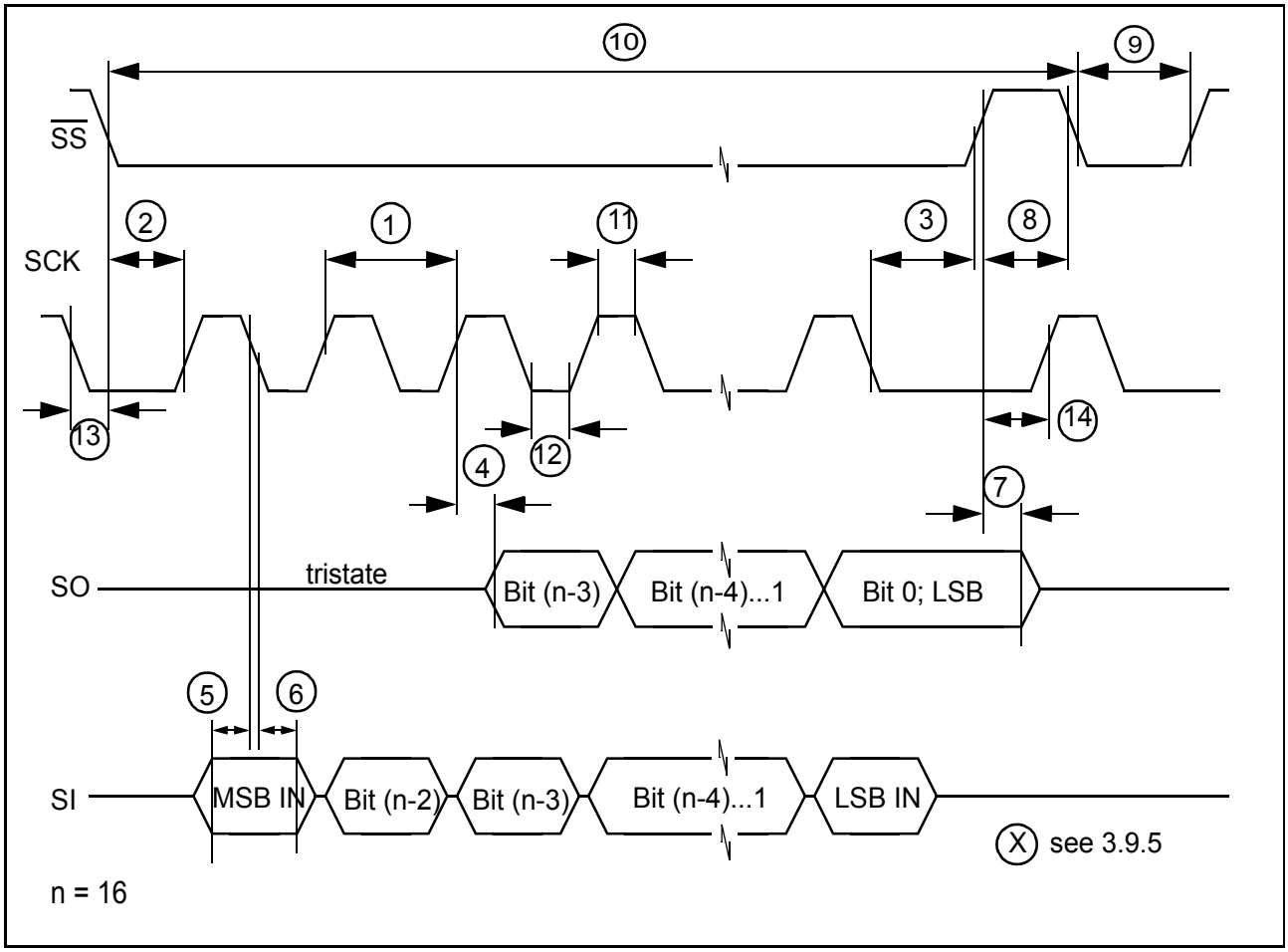

3.9.1 Input SCK	SPI clock input						
3.9.1.1 Low Level		B	U_{SCKL}			1.0	V
3.9.1.2 High Level		B	U_{SCKH}	2.0			V
3.9.1.3 Hysteresis		C	ΔU_{SCK}	0.1		0.6	V
3.9.1.4 Input Capacity		C	C_{SCK}			10	pF
3.9.1.5 Input Current	Pull up current source connected to VDD	A	$-I_{SCK}$	10	20	50	µA
3.9.2 Input $\overline{SS}$	Slave select signal						
3.9.2.1 Low Level	TLE6244X is selected	B	U_{SSL}			1.0	V
3.9.2.2 High Level		B	U_{SSH}	2.0			V
3.9.2.3 Hysteresis		C	ΔU_{SS}	0.1		0.6	V
3.9.2.4 Input Capacity		C	C_{SS}			10	pF
3.9.2.5 Input Current	Pull up current source connected to VDD	A	$-I_{SS}$	10	20	50	µA
3.9.3 Input SI	SPI data input						
3.9.3.1 Low Level		B	U_{SIL}			1.0	V
3.9.3.2 High Level		B	U_{SIH}	2.0			V
3.9.3.3 Hysteresis		C	ΔU_{SI}	0.1		0.6	V
3.9.3.4 Input Capacity		C	C_{SI}			10	pF
3.9.3.5 Input Current	Pull up current source connected to VDD	A	$-I_{SI}$	10	20	50	µA
3.9.4 Output SO	Tristate output of the TLE6244X (SPI output); On active reset ($\overline{RST}$) output SO is in tristate.						
3.9.4.1 Low Level	I_{SO} = 2mA	A	U_{SOL}			0.4	V
3.9.4.2 High Level	I_{SO} = -2mA	A	U_{SOH}	U_{VDD} - 1.0			V
3.9.4.3 Capacity	Capacity of the pin in tristate	C	C_{SO}			10	pF
3.9.4.4 Leakage Current	In tristate	A	I_{SO}	-10		10	µA

3.9.5 Timing	1. Cycle-Time (referred to master)	B	t_{cyc}	200			ns
	2. Enable Lead Time (referred to master)	C	t_{lead}	100			ns
	3. Enable Lag Time (referred to master)	C	t_{lag}	150			ns
	4. Data Valid CL = 50pF (5 MHz) Data Valid CL = 200pF (2MHz) (referred to TLE6244X)	C C	t_v t_v			100 150	ns ns
	5. Data Setup Time (referred to master)	C	t_{su}	50			ns
	6. Data Hold Time (referred to master)	C	t_h	20			ns
	7. Disable Time (referred to TLE6244X)	C	t_{dis}			100	ns
	8. Transfer Delay (referred to master)	C	t_{dt}	150			ns
	9. Select time (referred to master)	C	t_{sel}	50			nsec
	10. Access time (referred to master)	C	t_{acc}	8.35			µsec
	11. Serial clock high time (referred to master)	C	t_{SCKH}	50			ns
	12. Serial clock low time	C	t_{SCKL}	120			ns
	13. Disable Lead Time	C	t_{dld}	250			ns
	14. Disable Lag Time	C	t_{dlg}	250			ns

3.10 µsec-bus

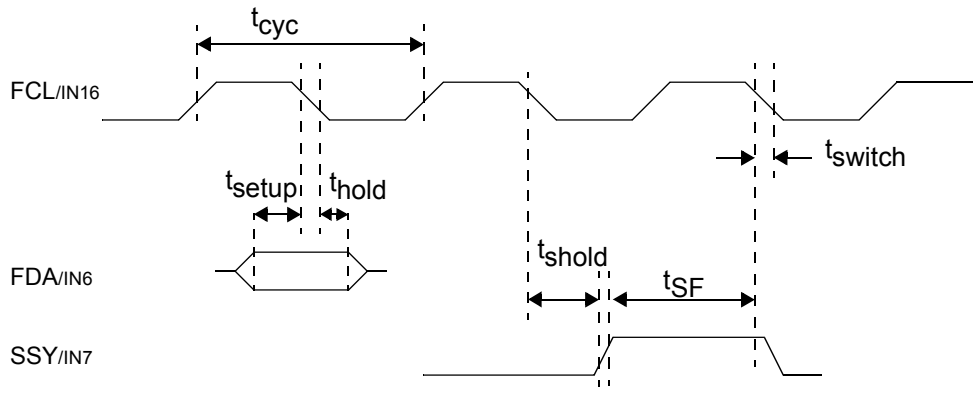

Timing µsec-bus

Notes for the timing:
Timing definitions are starting or ending at a voltage level of 1V (Low Level) resp. 2V (High Level).
During SSY = high the clock at FCL may be interrupted, i.e. there is no need for a clock during SSY = high.
The clock signal may remain on high or low statically during SSY = high.
A rising edge at SSY and a falling edge at FCL must not occur simultaneously!
On the rising edge of SSY the 16 bits clocked in TLE6244X by the last 16 falling edges at FCL are latched.

3.10.1 Input FCL, FDA, SSY	µsec-bus interface pins						
3.10.1.1 Low Level		B	U_{FCLl} U_{FDAl} U_{SSYl}			1.0	V
3.10.1.2 High Level		B	U_{FCLh} U_{FDAh} U_{SSYh}	2.0			V
3.10.1.3 Hysteresis		C	ΔU_{FCL} ΔU_{FDA} ΔU_{SSY}	0.1		0.6	V
3.10.1.4 Input Capacity		C	C_{FCL} C_{FDA} C_{SSY}			10	pF
3.10.1.5 Input Current	Pull up current source connected to VDD	A	I_{FCL} I_{FDA} I_{SSY}	5	10	20	µA
3.10.2 Timing	Cycle Time	C	t_{CYC}	62			nsec
	Data setup time	C	t_{setup}	10			nsec
	Data hold time	C	t_{hold}	10			nsec
	Switching time on FCL f_{FCL} < 10MHz	C	t_{switch}			30	nsec

	Switching time on FCL f_{FCL} > 10MHz	C	t_{switch}			8	nsec
	Select hold time	C	t_{shold}	25		10	nsec
	FCL Low time FCL High time	C C	tFCLL tFCLH	25 25			nsec
	SSY Low time SSY High time	C C	tSSYL tSSYH	25 25			nsec
	Time between rising edge of SSY and next falling edge of FCL	C	tSF	8			nsec
3.11 Diagnostics							
3.11.1 Diagnostic Thresholds Power Stages							
3.11.1.1 Open Load (OL)	Output turned off	B	$U_{OUT1..18}$	U_{VDD} - 0.5V	U_{VDD}	U_{VDD} + 0.5V	V
3.11.1.2 Short to Ground (SCG)	Output turned off	B	$U_{OUT1...18}$	0.54 * U_{VDD} - 0.5V	0.54 * U_{VDD}	0.54 * U_{VDD} + 0.5V	V
3.11.1.3 Short to Battery (SCB)	See 3.5.3, 3.6.3, 3.7.3, 3.8.3						
3.11.1.4 Overtemperature	Output turned on Individually for each stage	B	T_J	150			°C
3.11.2 Bias Voltage Open Load Power Stages	Output turned off, $I_{OUT1...18}$ = 0	A	$U_{OUT1...18}$	0.6 * U_{VDD}	0.7 * U_{VDD}	0.76* U_{VDD}	V
3.11.3 Diagnostic Currents Power Stages	4.5V ≤ U_{VDD} ≤ 5.5V, output turned off						
	$U_{OUT1...18}$ = 14V (diagnostic current incl. leakage current)	A	I_{OUT}	270	580	980	µA
	$U_{OUT1...18}$ = 0V	A	$-I_{OUT}$	50	130	250	µA
	$U_{OUT1...18}$ = OL-Threshold	C	I_{OUT}	220		980	µA
	$U_{OUT1...18}$ = SCG-Threshold	C	$-I_{OUT}$	40		250	µA

3.11.4 Filtering Time Power Switches	Time from occurrence of one of the errors 'short to ground', 'open load' or 'short to battery' until the fault is entered into the corresponding diagnostic register.	B	t_{Diag}	60		240	µs
	Time from occurrence of OT until the information is entered into the corresponding diagnostic register.	C	t_{DiatOT}	3		30	µs
3.11.5 Diagnostic Threshold UBatt	Bit Ubatt in DIA_REG5		$U_{th,UB}$	1		9	V
3.12 Reverse Currents	$U_{VDD} \leq 1V$						
3.12.1 Reverse Current at OUT1...18 without Supply Voltage	Static	C	$-I_{O1...6}$	3			A
		C	$-I_{O9...16}$	3			A
		C	$-I_{O7,8}$	0.8			A
		C	$-I_{O17,18}$	0.8			A
	Dynamic (Test pulse 1 according to ISO: 100V, R_i = 10W, 2ms)	C	$-I_{O1...6}$	10			A
		C	$-I_{O9...16}$	10			A
		C	$-I_{O7,8}$	1.5			A
		C	$-I_{O17,18}$	1.5			A
3.12.2 Reverse Current at OUT1...OUT18 in Operation Mode	$4.5V \leq U_{VDD} \leq 5.5V$ Pulsed power stage. Neighboring stages, reset, input signals of the power stages, VDD-monitoring, SPI interface (incl. registers) and µsec-bus must not be disturbed. Diagnostics of fault conditions at neighboring stages is still possible. Control bits in the SPI registers (serial control of power stages are not disturbed).						
	Open load failure at neighboring stages may be detected as short to ground	C	$-I_{O1...16}$	1			A
		C	$-I_{O7,8}$	0.3			A
		C	$-I_{O17,18}$	0.3			A
	Open load failure at neighboring stages **are not** detected as short to ground	C	$-I_{O1...4}$	0.5			A
		C	$-I_{O5...16}$	0.25			A
		C	$-I_{O7,8}$	0.3			A
		C	$-I_{O17,18}$	0.3			A
	Destruction limit	C	$-I_{O1...6}$	3			A
		C	$-I_{O9...16}$	3			A
		C	$-I_{O7,8}$	0.8			A
		C	$-I_{O17,18}$	0.8			A

3.13 VDD-Monitoring ABE	Bidirectional: open drain output / input with pull up current source An external current limitation must guarantee $I_{\overline{ABE}}$ < 5 mA for any $U_{\overline{ABE}}$						
3.13.1 Output	$U_{\overline{ABE}}$ = Low (after t_{glitch})for: 2.7V < U_{VDD} < 4.5V... 4.7V or 5.3V... 5.5V < U_{VDD} < 36V or Testmode (see 3.13.5 or 3.13.6) or Pin GND_ABE is open						
3.13.1.1 Low Level	U_{VDD} > 4.5V, $I_{\overline{ABE}}$<5mA U_{VDD} = 2.7V, $I_{\overline{ABE}}$<1mA, in case of less current, ohmic behavior can be assumed	A A	$U_{\overline{ABE}}$ $U_{\overline{ABE}}$			1.2 1.0	V V
	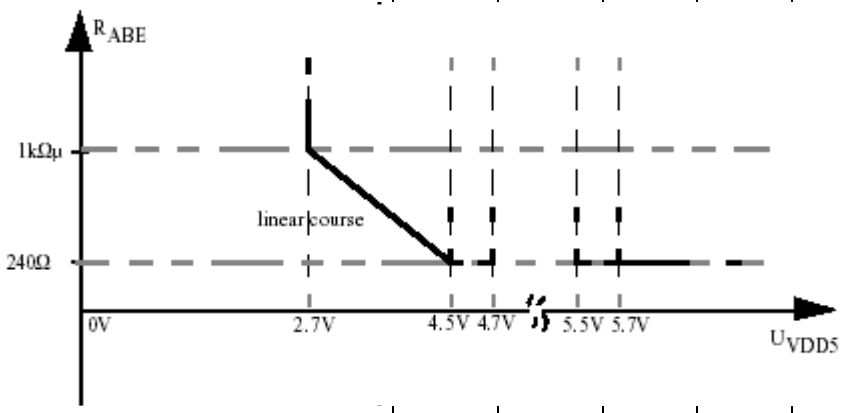						
3.13.1.2 Maximum Voltage	No current recovery on VDD, UBatt and the logical pins ($\overline{SS}$,SCK,SI,SO,INx,$\overline{RST}$) in case of short to battery at $\overline{ABE}$ (up to 36V)	C	$U_{\overline{ABE}}$			36	V
3.13.2 Input							
3.13.2.1 Low Level		B	$U_{\overline{ABEL}}$			0.3 * U_{VDD}	V
3.13.2.2 High Level		B	$U_{\overline{ABEH}}$	0.7 * U_{VDD}			V
3.13.2.3 Hysteresis		C	$\Delta U_{\overline{ABE}}$	0.2		1.0	V
3.13.2.4 Input Current	Pull up current source connected to VDD						
	-0.25V ≤ $U_{\overline{ABE}}$ ≤ U_{VDD}-1.7 V -0.25V ≤ $U_{\overline{ABE}}$ ≤ U_{VDD}-1.5 V -0.3V ≤ $U_{\overline{ABE}}$ < -0,25V	A C C	$-I_{\overline{ABE}}$ $-I_{\overline{ABE}}$ $-I_{\overline{ABE}}$	20 15	40 40	100 100 300	μA μA μA
3.13.3 Overvoltage Threshold	Voltage referred to GND_$\overline{ABE}$	B	V_{DDth_h}	5.3		5.5	V

3.13.4 Undervoltage Threshold	Voltage referred to GND_$\overline{ABE}$	B	V_{DDth_l}	4.5		4.7	V
3.13.5 Test Mode: Reducing the Overvoltage Threshold	Voltage referred to GND_$\overline{ABE}$	B	V_{DDth_h}	4.5		4.7	V
3.13.6 Test Mode: Lifting the Undervoltage Threshold	Voltage referred to GND_$\overline{ABE}$	B	V_{DDth_l}	5.3		5.5	V
3.13.7 Suppression of Glitches	Periodical alternating between overvoltage and normal operating voltage with T< 50µs and overvoltage duration > 5µs leads to overvoltage detection. If the transition from undervoltage to overvoltage is faster than the filtering time t_{glitch}, the filtering time t_{glitch} for overvoltage detection is not started again. The same is valid for reverse order.	A	t_{glitch}	50		215	µs
3.13.8 GND_$\overline{ABE}$							
3.13.8.1 Permissible Offset between GND_$\overline{ABE}$ and GND		C	ΔU_{GND}			0.3	V
3.13.8.2 Bond Lift / Solder Crack on GND_ABE	Pin $\overline{ABE}$ goes LOW (see 3.13.1.1). The power stages are switched off. The over- and undervoltage thresholds are increased by typically 700mV for T_A = 25°C.						

3.14 Clamping Energy

3.14.1 E = f($I_{OUT1...6}$), 2.2A Power Stages with 70V Clamping

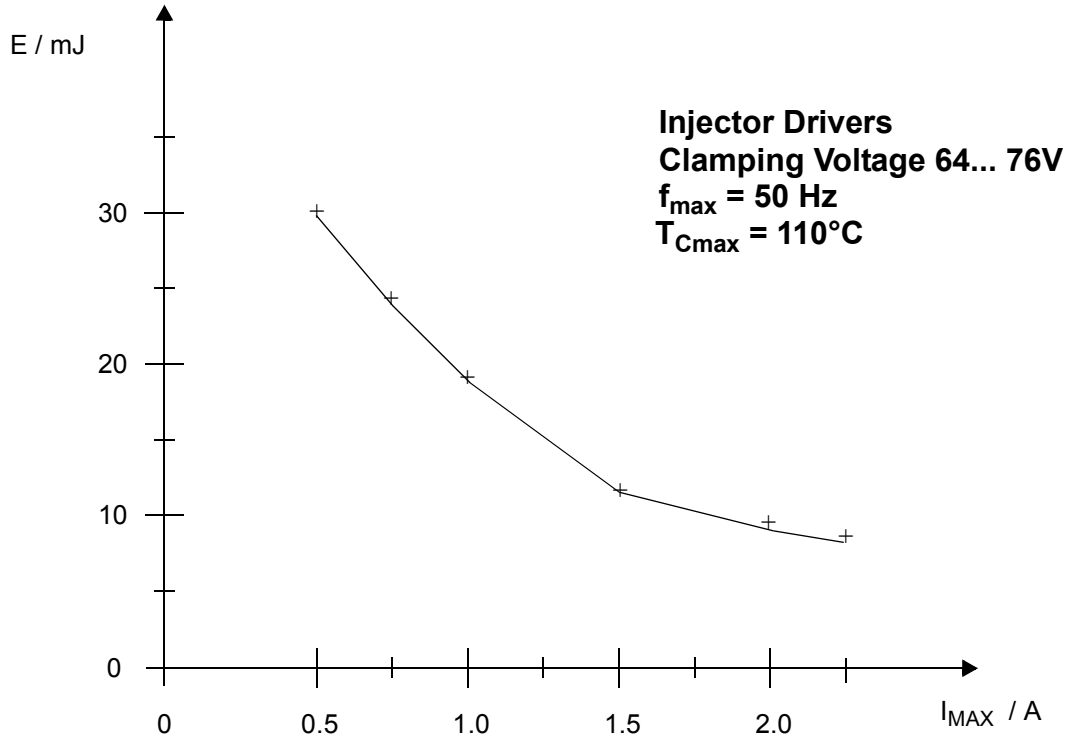

3.14.2 E = f ($I_{OUT9...A14}$), 2.2A Power Stages with 45V Clamping

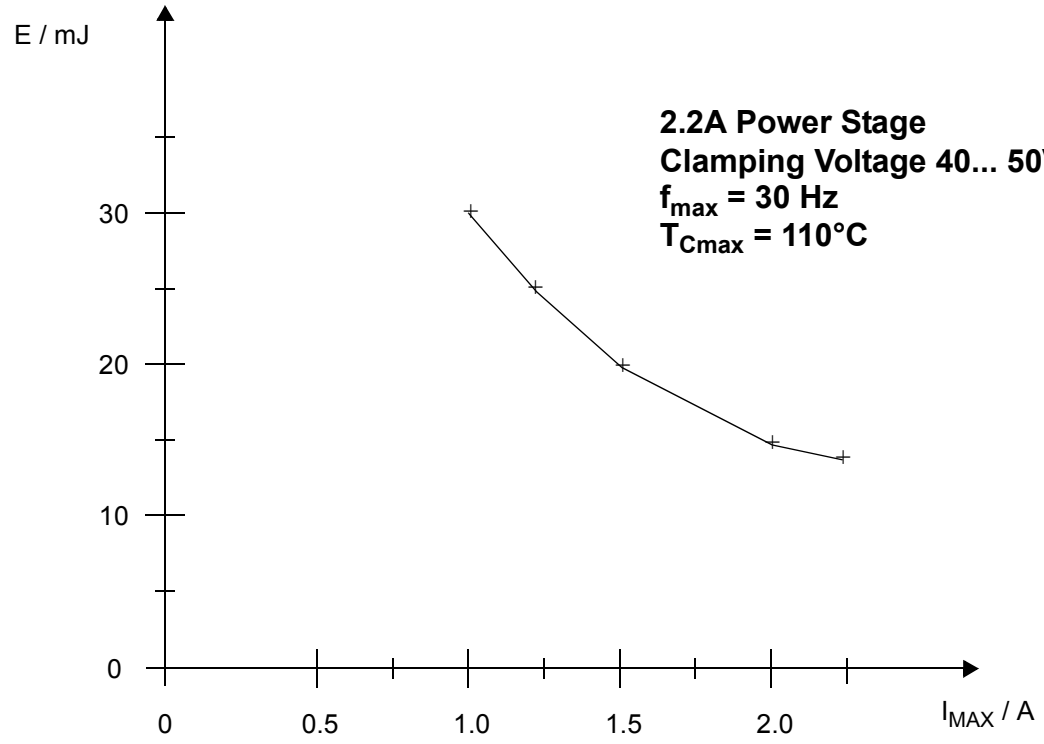

3.14.3 E = f($I_{OUT7,8,17,18}$), 1100mA Power Stages with 45V Clamping

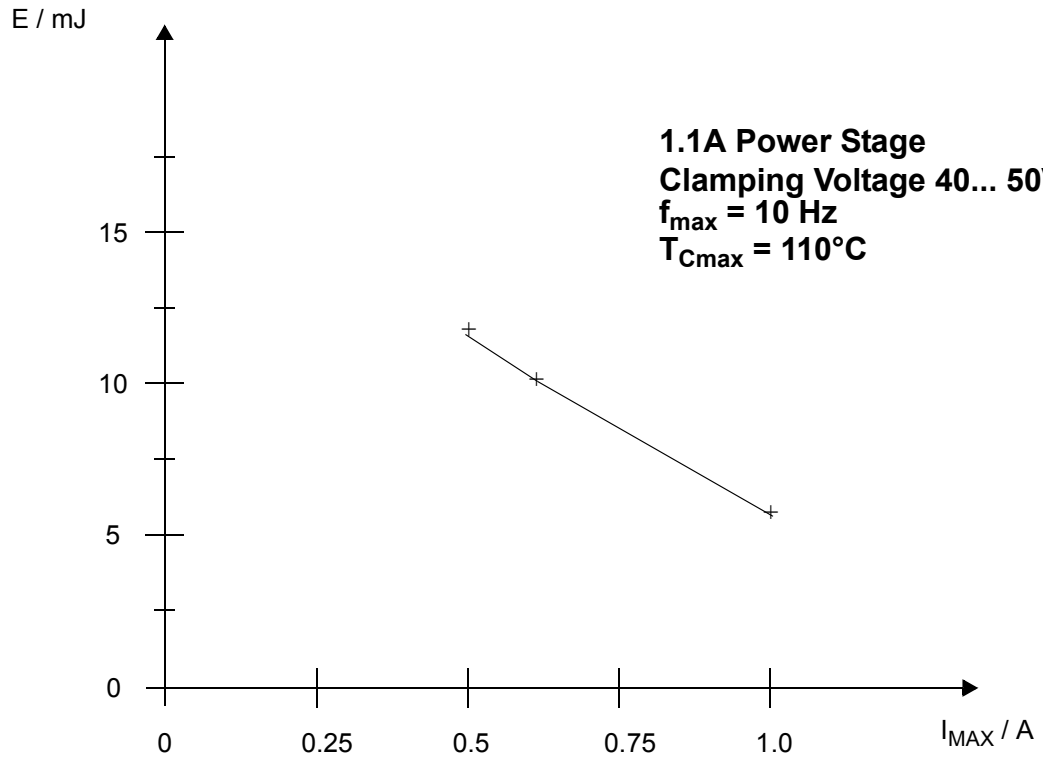

3.14.4 E = f($I_{OUT15, OUT16}$), 3.0A Power Stages with 45V Clamping

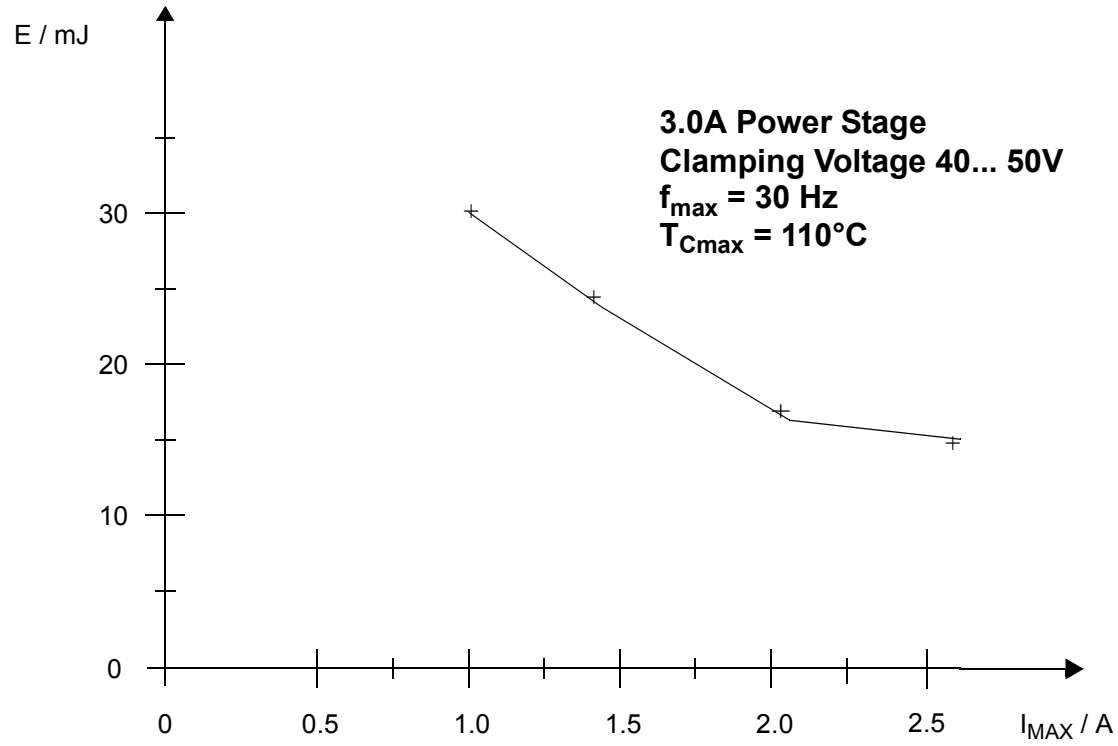

4. ESD

All pins of the IC have to be protected against electrostatic discharge (ESD) by appropriate protection
components.

The integrated circuit has to meet the requirements of the „Human Body Model“ with U_C = 2kV, C = 100pF and R2 = 1,5kΩ without any defect or destruction of the IC.

Appropriate measures to reach the required ESD capability have to be coordinated.

The ESD capability of the IC has to be verified by the following test circuit.

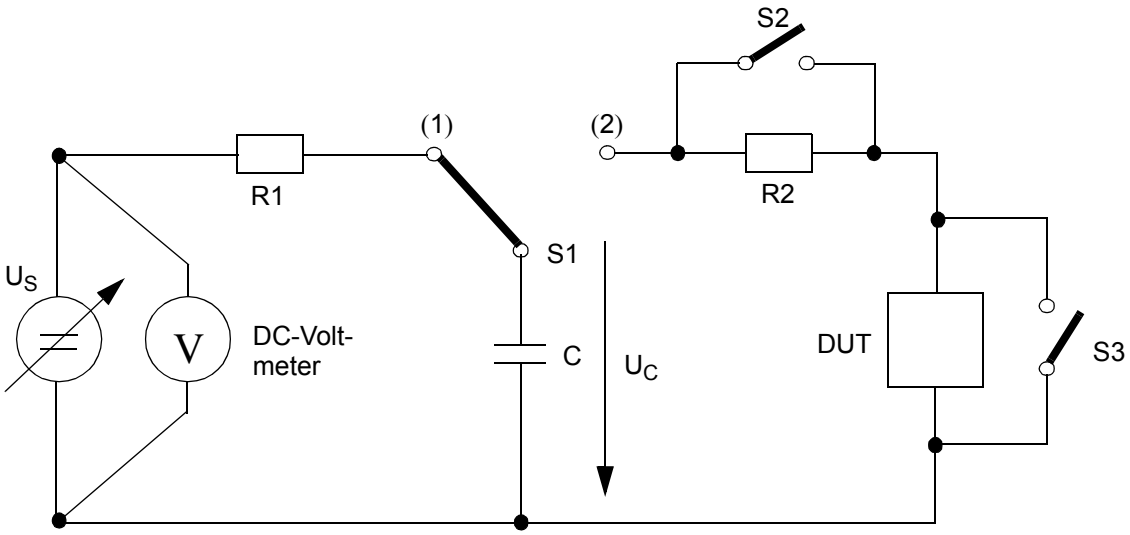

U_C = ± 2kV

R_1 = 100kΩ

R_2 = 1,5kΩ

C = 100pF

Number of pulses each pin: 18 in all
Frequency: 1Hz

Arrangement and performance:
The requirements of MIL883D Method 3015 (latest revision) have to be fulfilled.

5. Package Outline

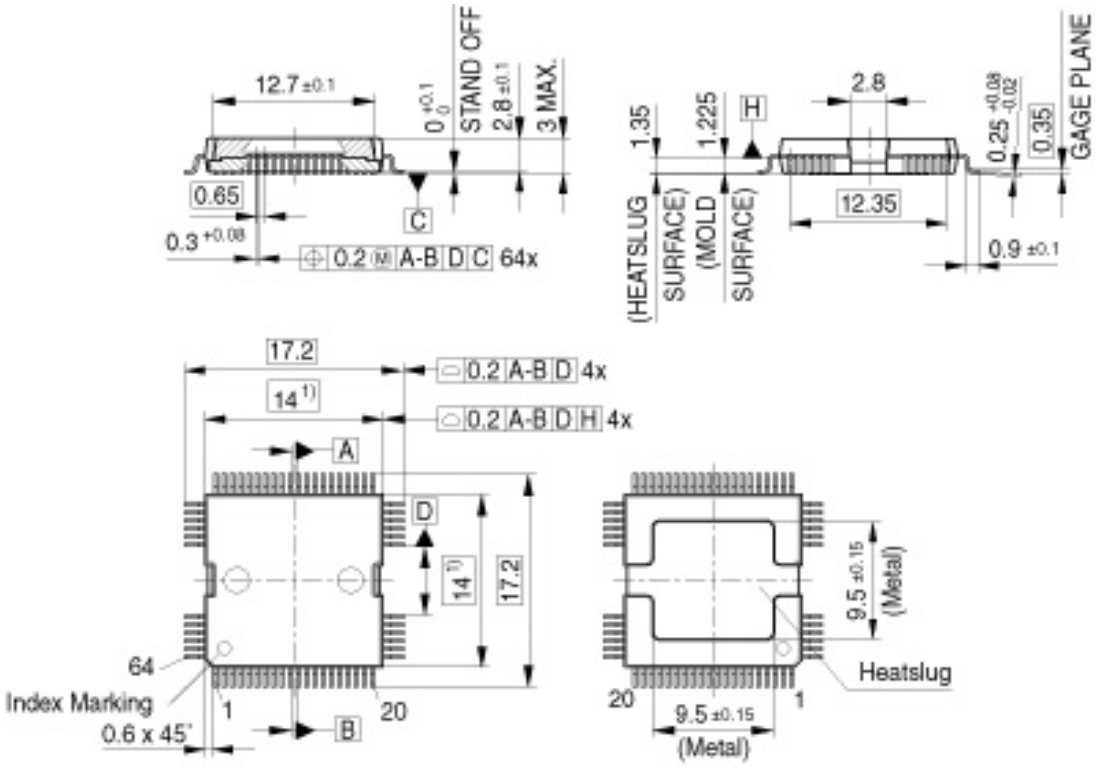

1) Does not include plastic or metal protrusion of 0.25 max. per side

Green Product (RoHS compliant)

To meet the world-wide customer requirements for environmentally friendly products and to be compliant with government regulations the device is available as a green product. Green products are RoHSCompliant (i.e Pb-free finish on leads and suitable for Pb-free soldering according to IPC/JEDEC JSTD-020).

6. Revision History

TLE 6244X

Revision History:	**2007-06-11** V7 (previous Version V6 - Preliminary Data Sheet)
Changes to V7	
2007-06-11	Status to Final
2007-06-11	typo: MQFM > MQFP

Edition 2007-06-11

Published by
Infineon Technologies AG
81726 Munich, Germany

© 6/11/07 Infineon Technologies AG
All Rights Reserved.

Legal Disclaimer

The information given in this document shall in no event be regarded as a guarantee of conditions or characteristics. With respect to any examples or hints given herein, any typical values stated herein and/or any information regarding the application of the device, Infineon Technologies hereby disclaims any and all warranties and liabilities of any kind, including without limitation, warranties of non-infringement of intellectual property rights of any third party.

Information

For further information on technology, delivery terms and conditions and prices, please contact the nearest Infineon Technologies Office (**www.infineon.com**).

Warnings

Due to technical requirements, components may contain dangerous substances. For information on the types in question, please contact the nearest Infineon Technologies Office.

Infineon Technologies components may be used in life-support devices or systems only with the express written approval of Infineon Technologies, if a failure of such components can reasonably be expected to cause the failure of that life-support device or system or to affect the safety or effectiveness of that device or system. Life support devices or systems are intended to be implanted in the human body or to support and/or maintain and sustain and/or protect human life. If they fail, it is reasonable to assume that the health of the user or other persons may be endangered.

ENTEGRECİ

Bu belge www.entegreci.com üzerinden sunulmaktadır.

Elektronik komponent tedarikinde Entegreci

Entegreci, Eskişehir merkezli, Türkiye geneline satış yapan bir elektronik komponent mağazasıdır. Entegreler (IC), mikrodenetleyiciler, transistörler, diyotlar, pasif elemanlar, konnektörler, modüller ve geliştirme kartları tek adetten seri üretim adetlerine kadar satılır. Ürün sayfalarında güncel stok durumunu, fiyatı ve datasheet bağlantısını bulabilirsiniz.

Parça koduyla arama

Üretici parça numarasını yazın; stok ve fiyatı hemen görün.

www.entegreci.com

Ürün kategorileri

Entegreden kapasitöre tüm elektronik komponent kategorileri.

Kategorilere göz atın

Üreticiler

Aradığınız üreticinin ürünlerini tek sayfada inceleyin.

Üreticileri görün

Toplu alım ve teklif

Listede olmayan ya da yüksek adetli parçalar için teklif isteyin.

Teklif isteyin

www.entegreci.com | **destek@entegreci.com** | **0850 305 90 34**

Entegreci is an online electronic components store based in Türkiye. Search by manufacturer part number to see stock, prices and datasheets for integrated circuits, microcontrollers, transistors, passive components and connectors, or request a quote for parts that are not listed.

Bu sayfa Entegreci tarafından eklenmiştir. Belgenin önceki sayfaları asıl yayıncısına aittir ve içeriği değiştirilmemiştir; en güncel sürüm için belgenin yayıncısına başvurun.