BTW67 and BTW69 Series

STANDARD

50A SCRs

Table 1: Main Features

Symbol	Value	Unit
$I_{T(RMS)}$	50	A
V_{DRM}/V_{RRM}	600 to 1200	V
I_{GT}	80	mA

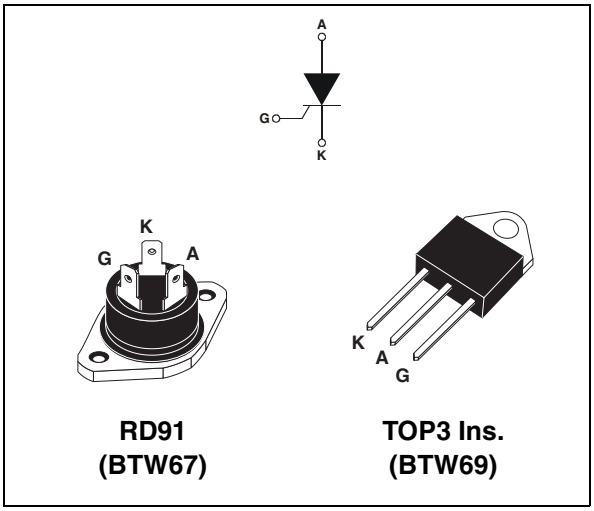

RD91 (BTW67) **TOP3 Ins. (BTW69)**

DESCRIPTION

Available in high power packages, the **BTW67 / BTW69** Series is suitable in applications where power handling and power dissipation are critical, such as solid state relays, welding equipment, high power motor control.

Based on a clip assembly technology, they offer a superior performance in surge current handling capabilities.

Thanks to their internal ceramic pad, they provide high voltage insulation ($2500V_{RMS}$), complying with UL standards (file ref: E81734).

Table 2: Order Codes

Part Numbers	Marking
BTW67-xxx	BTW67xxx
BTW69-xxxRG	BTW69xxx

Table 3: Absolute Ratings (limiting values)

Symbol	Parameter			Value	Unit
$I_{T(RMS)}$	RMS on-state current (180° conduction angle)	RD91	T_c = 70°C	50	A
		TOP3 Ins.	T_c = 75°C		
$IT_{(AV)}$	Average on-state current (180° conduction angle)	RD91	T_c = 70°C	32	A
		TOP3 Ins.	T_c = 75°C		
I_{TSM}	Non repetitive surge peak on-state current	t_p = 8.3 ms	T_j = 25°C	610	A
		t_p = 10 ms		580	
I^2t	I^2t Value for fusing		T_j = 25°C	1680	A^2S
dI/dt	Critical rate of rise of on-state current I_G = 2 x I_{GT} , $t_r \leq$ 100 ns	F = 60 Hz	T_j = 125°C	50	A/µs
I_{GM}	Peak gate current	t_p = 20 µs	T_j = 125°C	8	A
$P_{G(AV)}$	Average gate power dissipation		T_j = 125°C	1	W
T_{stg} T_j	Storage junction temperature range Operating junction temperature range			- 40 to + 150 - 40 to + 125	°C
V_{RGM}	Maximum peak reverse gate voltage			5	V

Tables 4: Electrical Characteristics (T_j = 25°C, unless otherwise specified)

Symbol	Test Conditions			Value	Unit
I_{GT}	V_D = 12 V R_L = 33 Ω		MIN.	8	mA
			MAX.	80	
V_{GT}			MAX.	1.3	V
V_{GD}	$V_D = V_{DRM}$ R_L = 3.3 kΩ	T_j = 125°C	MIN.	0.2	V
I_H	I_T = 500 mA Gate open		MAX.	150	mA
I_L	$I_G = 1.2 \times I_{GT}$		MAX.	200	mA
dV/dt	V_D = 67 % V_{DRM} Gate open	T_j = 125°C	MIN.	1000	V/µs
V_{TM}	I_{TM} = 100 A tp = 380 µs	T_j = 25°C	MAX.	1.9	V
V_{t0}	Threshold voltage	T_j = 125°C	MAX.	1.0	V
R_d	Dynamic resistance	T_j = 125°C	MAX.	8.5	mΩ
I_{DRM} I_{RRM}	$V_{DRM} = V_{RRM}$	T_j = 25°C	MAX.	10	µA
		T_j = 125°C		5	mA

Table 5: Thermal resistance

Symbol	Parameter		Value	Unit
$R_{th(j-c)}$	Junction to case (D.C.)	RD91 (Insulated)	1.0	°C/W
		TOP3 Insulated	0.9	
$R_{th(j-a)}$	Junction to ambient (D.C.)	TOP3 Insulated	50	°C/W

Figure 1: Maximum average power dissipation versus average on-state current

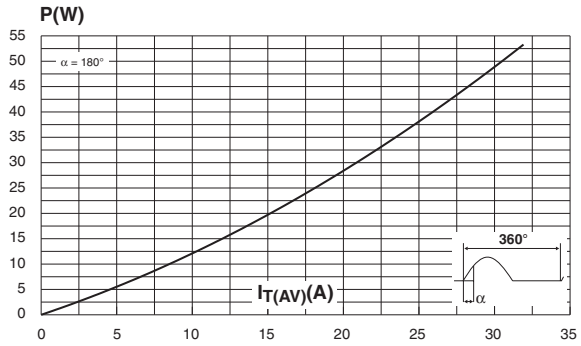

Figure 2: Average and D.C. on-state current versus case temperature

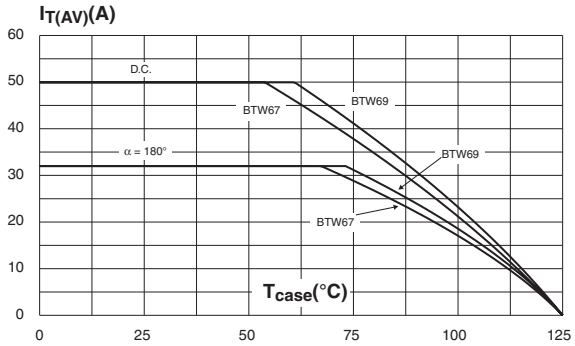

Figure 3: Relative variation of thermal impedance versus pulse duration

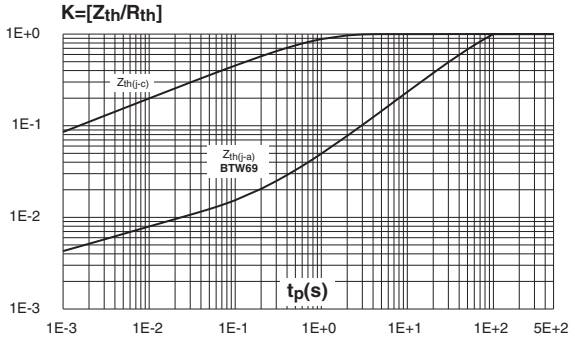

Figure 4: Relative variation of gate trigger current, holding current and latching current versus junction temperature

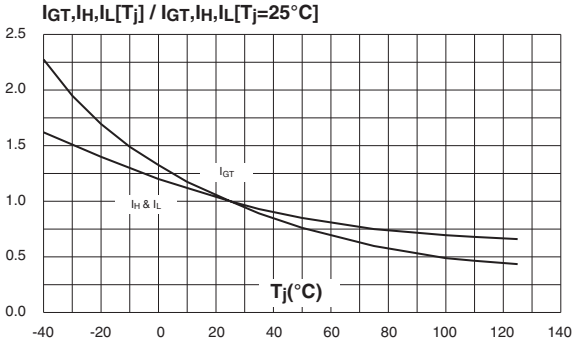

Figure 5: Surge peak on-state current versus number of cycles

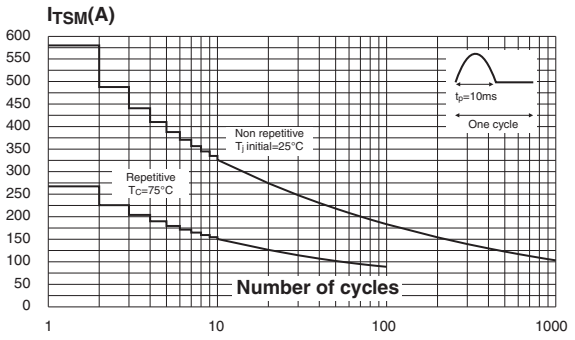

Figure 6: Non-repetitive surge peak on-state current for a sinusoidal pulse with width tp < 10 ms, and corresponding values of I²t

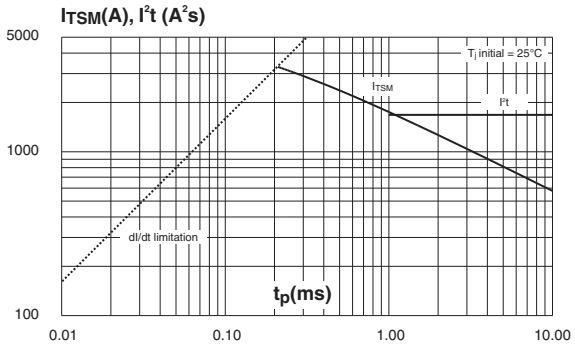

Figure 7: On-state characteristics (maximum values)

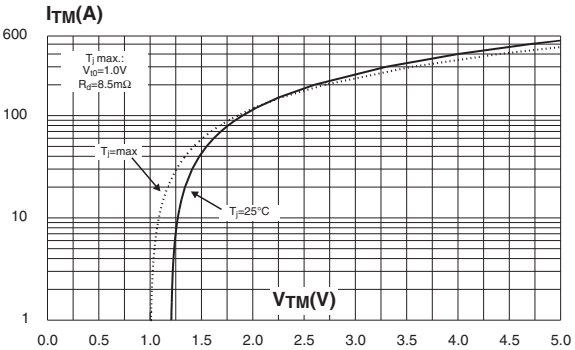

Figure 8: Ordering Information Scheme

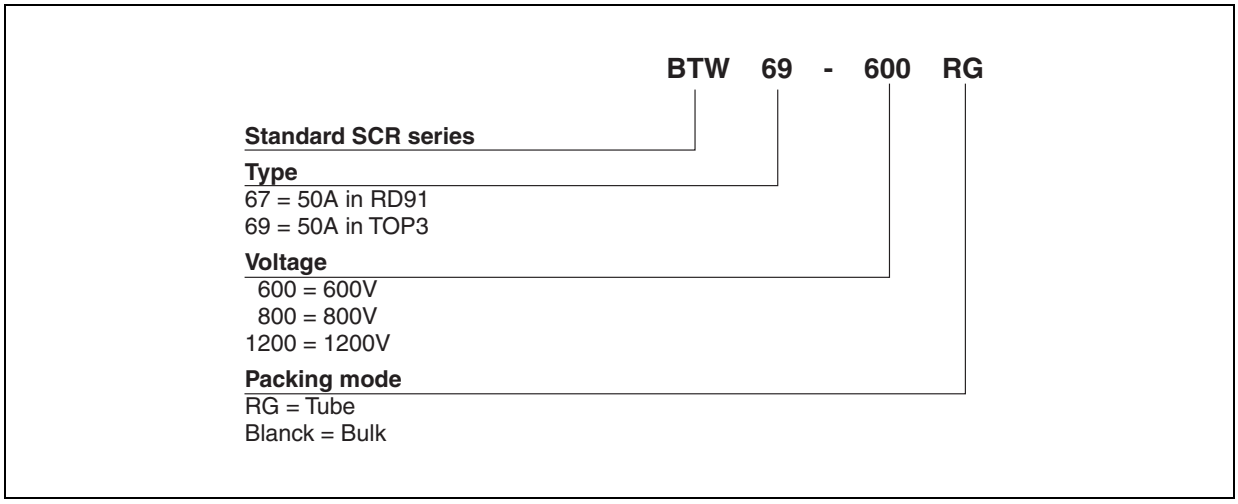

Table 6: Product Selector

Part Numbers	Voltage (xxx)			Sensitivity	Package
	600 V	800 V	1200 V		
BTW67-xxx	X	X	X	80 mA	RD91
BTW69-xxx	X	X	X	80 mA	TOP3 Ins.

Figure 9: RD91 Package Mechanical Data

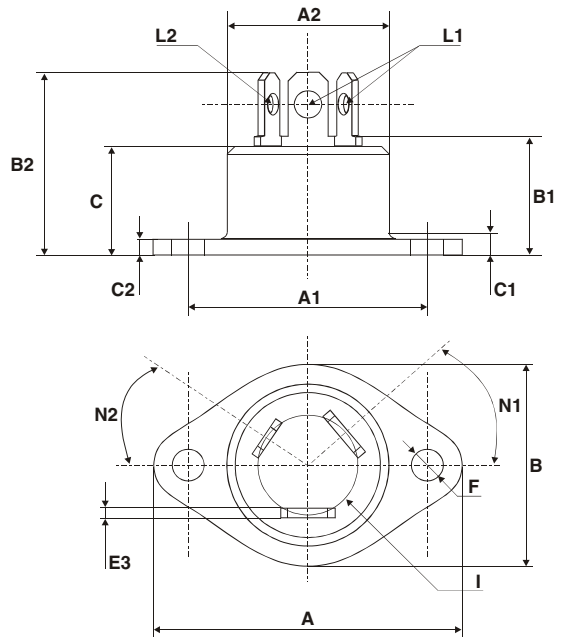

REF.	DIMENSIONS			
	Millimeters		Inches	
	Min.	Max.	Min.	Max.
A		40.00		1.575
A1	29.90	30.30	1.177	1.193
A2		22.00		0.867
B		27.00		1.063
B1	13.50	16.50	0.531	0.650
B2		24.00		0.945
C		14.00		0.551
C1		3.50		0.138
C2	1.95	3.00	0.077	0.118
E3	0.70	0.90	0.027	0.035
F	4.00	4.50	0.157	0.177
I	11.20	13.60	0.441	0.535
L1	3.10	3.50	0.122	0.138
L2	1.70	1.90	0.067	0.075
N1	33°	43°	33°	43°
N2	28°	38°	28°	38°

Figure 10: TOP3 Insulated Package Mechanical Data

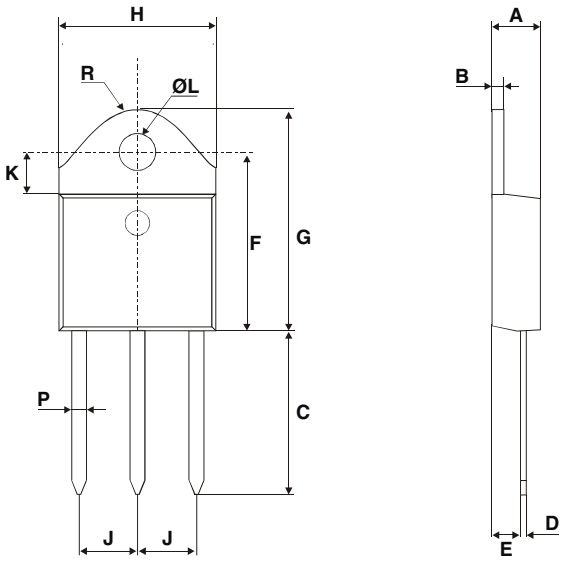

REF.	DIMENSIONS					
	Millimeters			Inches		
	Min.	Typ.	Max.	Min.	Typ.	Max.
A	4.4		4.6	0.173		0.181
B	1.45		1.55	0.057		0.061
C	14.35		15.60	0.565		0.614
D	0.5		0.7	0.020		0.028
E	2.7		2.9	0.106		0.114
F	15.8		16.5	0.622		0.650
G	20.4		21.1	0.815		0.831
H	15.1		15.5	0.594		0.610
J	5.4		5.65	0.213		0.222
K	3.4		3.65	0.134		0.144
ØL	4.08		4.17	0.161		0.164
P	1.20		1.40	0.047		0.055
R		4.60			0.181	

In order to meet environmental requirements, ST offers these devices in ECOPACK® packages. These packages have a Lead-free second level interconnect . The category of second level interconnect is marked on the package and on the inner box label, in compliance with JEDEC Standard JESD97. The maximum ratings related to soldering conditions are also marked on the inner box label. ECOPACK is an ST trademark. ECOPACK specifications are available at: www.st.com.

Table 7: Ordering Information

Ordering type	Marking	Package	Weight	Base qty	Delivery mode
BTW67-xxx	BTW67xxx	RD91	20 g	25	Bulk
BTW69-xxxRG	BTW69xxx	TOP3 Ins.	4.5 g	30	Tube

Note: xxx = voltage

Table 8: Revision History

Date	Revision	Description of Changes
Apr-2001	4A	Last update.
13-Feb-2006	5	TOP3 Insulated delivery mode changed from bulk to tube. ECOPACK statement added.

Information furnished is believed to be accurate and reliable. However, STMicroelectronics assumes no responsibility for the consequences of use of such information nor for any infringement of patents or other rights of third parties which may result from its use. No license is granted by implication or otherwise under any patent or patent rights of STMicroelectronics. Specifications mentioned in this publication are subject to change without notice. This publication supersedes and replaces all information previously supplied. STMicroelectronics products are not authorized for use as critical components in life support devices or systems without express written approval of STMicroelectronics.

The ST logo is a registered trademark of STMicroelectronics.
All other names are the property of their respective owners

© 2006 STMicroelectronics - All rights reserved

STMicroelectronics group of companies
Australia - Belgium - Brazil - Canada - China - Czech Republic - Finland - France - Germany - Hong Kong - India - Israel - Italy - Japan - Malaysia - Malta - Morocco - Singapore - Spain - Sweden - Switzerland - United Kingdom - United States of America
www.st.com

ENTEGRECİ

Bu belge www.entegreci.com üzerinden sunulmaktadır.

Elektronik komponent tedarikinde Entegreci

Entegreci, Eskişehir merkezli, Türkiye geneline satış yapan bir elektronik komponent mağazasıdır. Entegreler (IC), mikrodenetleyiciler, transistörler, diyotlar, pasif elemanlar, konnektörler, modüller ve geliştirme kartları tek adetten seri üretim adetlerine kadar satılır. Ürün sayfalarında güncel stok durumunu, fiyatı ve datasheet bağlantısını bulabilirsiniz.

Parça koduyla arama

Üretici parça numarasını yazın; stok ve fiyatı hemen görün.

www.entegreci.com

Ürün kategorileri

Entegreden kapasitöre tüm elektronik komponent kategorileri.

Kategorilere göz atın

Üreticiler

Aradığınız üreticinin ürünlerini tek sayfada inceleyin.

Üreticileri görün

Toplu alım ve teklif

Listede olmayan ya da yüksek adetli parçalar için teklif isteyin.

Teklif isteyin

www.entegreci.com | **destek@entegreci.com** | **0850 305 90 34**

Entegreci is an online electronic components store based in Türkiye. Search by manufacturer part number to see stock, prices and datasheets for integrated circuits, microcontrollers, transistors, passive components and connectors, or request a quote for parts that are not listed.

Bu sayfa Entegreci tarafından eklenmiştir. Belgenin önceki sayfaları asıl yayıncısına aittir ve içeriği değiştirilmemiştir; en güncel sürüm için belgenin yayıncısına başvurun.