FAIRCHILD SEMICONDUCTOR®

August 2010

SG6859A
Low-Cost, Green-Mode PWM Controller for Flyback Converters

Features

- Green-Mode PWM
- Supports the “Blue Angel” Standard
- Low Startup Current: 9µA
- Low Operating Current: 3mA
- 300mA Driving Capability
- Leading-Edge Blanking
- Constant Output Power Limit
- Universal Input
- Built-in Synchronized Slope Compensation
- Current-Mode Operation
- Cycle-by-cycle Current Limiting
- Under-Voltage Lockout (UVLO)
- Programmable PWM Frequency with Frequency Hopping
- V_{DD} Over-Voltage Protection (Auto Restart)
- Gate Output Voltage Clamped at 17V
- Low Cost
- Few External Components Required
- Small SSOT-6 Package

Applications

General-purpose switching mode power supplies and flyback power converters, such as:

- Battery chargers for cellular phones, cordless phones, PDAs, digital cameras, and power tools
- Power adapters for ink jet printers, video game consoles, and portable audio players
- Open-frame SMPS for TV/DVD standby and auxiliary supplies, home appliances, and consumer electronics
- Replacements for linear transformers and RCC SMPS
- PC 5V standby power

Description

This highly integrated PWM controller provides several enhancements designed to meet the low standby-power needs of low-power SMPS. To minimize standby power consumption, the proprietary green-mode function provides off-time modulation to linearly decrease the switching frequency under light-load conditions. This green-mode function enables the power supply to meet even the strictest power conservation requirements.

The BiCMOS fabrication process enables reducing the startup current to 9µA and the operating current to 3mA. To further improve power conservation, a large startup resistance can be used. Built-in synchronized slope compensation ensures the stability of peak current mode control. Proprietary internal compensation provides a constant output power limit over a universal AC input range ($90V_{AC}$ to $264V_{AC}$). Pulse-by-pulse current limiting ensures safe operation during short-circuits.

To protect the external power MOSFET from damage by supply over voltage, the SG6859A’s output driver is clamped at 17V. SG6859A controllers can be used to improve the performance and reduce the production cost of power supplies. The best choice for replacing linear and RCC-mode power adapters, the SG6859A is available in 8-pin DIP and 6-pin SSOT-6 packages.

This product is not recommended for shipping into the United States. It may be subject to court injunction. See http://www.fairchildsemi.com/about-fairchild/media-center/litigation.

© 2007 Fairchild Semiconductor Corporation

Ordering Information

Part Number	Operating Temperature Range	Package	Packing Method
SG6859ATZ	-40 to +105°C	SSOT-6	Tape & Reel
SG6859ATY	-40 to +105°C	SSOT-6	Tape & Reel
SG6859ADZ	-40 to +105°C	DIP-8	Tube
SG6859ADY (Preliminary)	-40 to +105°C	DIP-8	Tube

Application Diagram

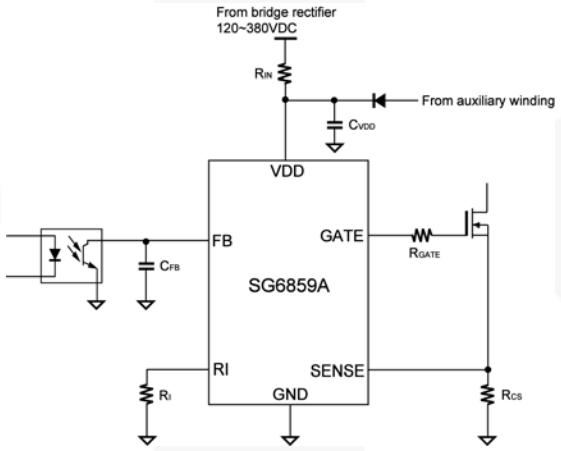

Figure 1. Typical Application

Internal Block Diagram

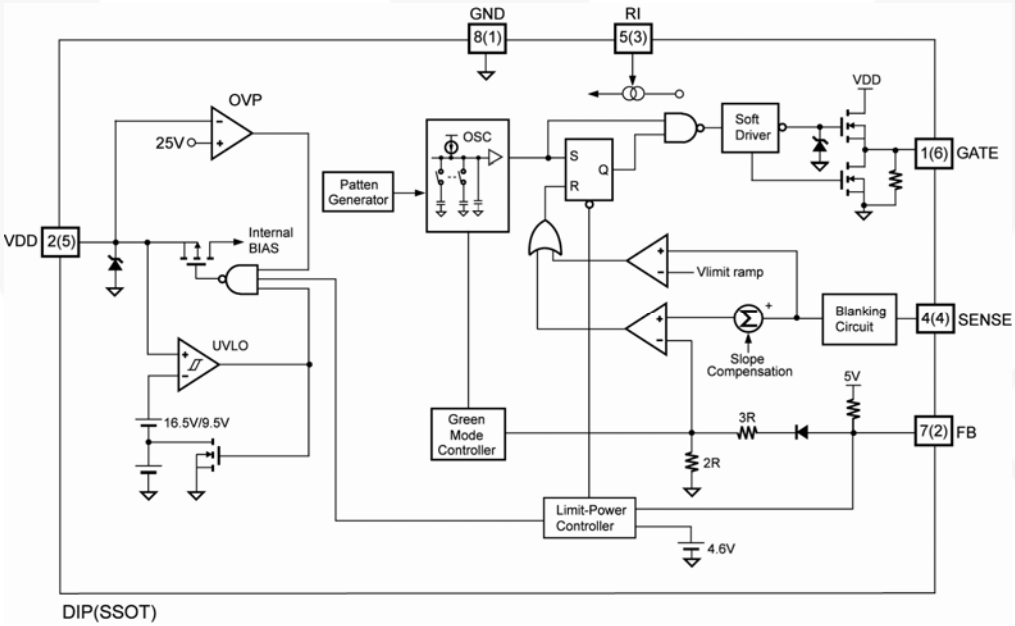

Figure 2. Functional Block Diagram

© 2007 Fairchild Semiconductor Corporation

Marking Information

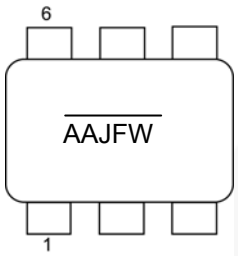

AAJF: SG6859A
W: Week Code
A~Z=W1~W26
A~Z=W27~W52
____ : Lead Free Package

***Marking for SG6859ATZ (Pb-free)**

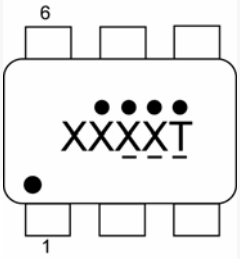

XXXX: AAJF=SG6859A
T : Die Run Code
. . . . : Year Code
- - - : Week Code

***Marking for SG6859ATY (Green Compound)**

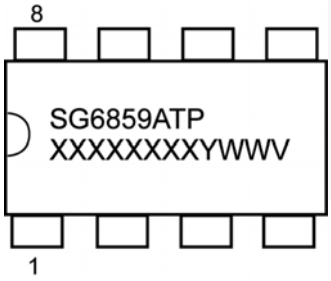

T: D=DIP
P: Z= Lead Free + RoHS Compatible
Null=Regular Package
XXXXXXXX: Wafer Lot
Y: Year
WW: Week
V: Assembly Location

***Marking for SG6859ADZ (Pb-free)**

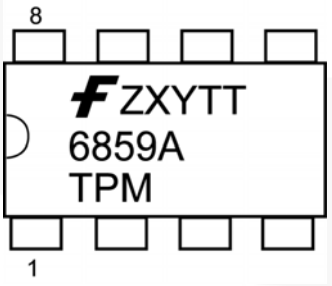

***F*- Fairchild Logo**
Z- Plant Code
X- 1-Digit Year Code
Y- 1-Digit Week Code
TT: 2-Digit Die Run Code
T: Package Type (D=DIP)
P: Y: Green Package
M: Manufacture Flow Code

***Marking for SG6859ADY (Green Compound)**

Figure 3. Top Mark

© 2007 Fairchild Semiconductor Corporation

Pin Configurations

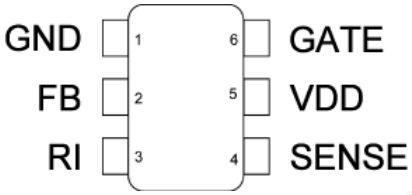

Figure 4. SSOT-6 Pin Configuration

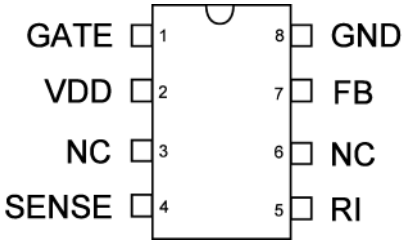

Figure 5. DIP-8 Pin Configuration

Pin Definitions

DIP Pin #	SSOT Pin #	Name	Description
1	6	GATE	The totem-pole output driver for driving the power MOSFET.
2	5	VDD	Power supply
3		NC	No connection
4	4	SENSE	Current sense. This pin senses the voltage across a resistor. When the voltage reaches the internal threshold, PWM output is disabled. This activates over-current protection. This pin also provides current amplitude information for current-mode control.
5	3	RI	A resistor connected from the RI pin to ground generates a constant current source used to charge an internal capacitor and determine the switching frequency. Increasing the resistance reduces the amplitude of the current source and the switching frequency. A 95kΩ resistor R_I results in a 50μA constant current I_I and a 70kHz switching frequency.
6		NC	No connection
7	2	FB	Feedback. The FB pin provides the output voltage regulation signal. It provides feedback to the internal PWM comparator, so that the PWM comparator can control the duty cycle.
8	1	GND	Ground

© 2007 Fairchild Semiconductor Corporation

Absolute Maximum Ratings

Stresses exceeding the absolute maximum ratings may damage the device. The device may not function or be operable above the recommended operating conditions and stressing the parts to these levels is not recommended. In addition, extended exposure to stresses above the recommended operating conditions may affect device reliability. The absolute maximum ratings are stress ratings only.

Symbol	Parameter		Min.	Max.	Unit
V_{VDD}	DC Supply Voltage[1, 2]			30	V
V_{FB}	Input Voltage to FB Pin		-0.3	7.0	V
V_{SENSE}	Input Voltage to Sense Pin		-0.3	7.0	V
T_J	Operating Junction Temperature			150	°C
Θ_{JA}	Thermal Resistance (Junction-to-Air)	SSOT		273	°C/W
		DIP		113	°C/W
T_{STG}	Storage Temperature Range		-55	+150	°C
T_L	Lead Temperature (Wave Soldering or IR, 10 Seconds)			+260	°C
ESD	Electrostatic Discharge Capability, Human Body Model JESD22-A114			3.5	kV
	Electrostatic Discharge Capability, Charged Device Model JESD22-C101			1.5	kV
	Electrostatic Discharge Capability, Machine Model, JESD22-A115			200	V

Notes:
1. All voltage values, except differential voltages, are given with respect to GND pin.
2. Stresses beyond those listed under Absolute Maximum Ratings may cause permanent damage to the device.

© 2007 Fairchild Semiconductor Corporation

Electrical Characteristics

Unless otherwise noted, V_{DD}=15V and T_A=25°C.

Symbol	Parameter	Conditions	Min.	Typ.	Max.	Units
V_{DD} Section						
V_{DD-OP}	Continuously Operation Voltage				22	V
V_{DD-ON}	Turn-on Threshold Voltage		15.5	16.5	17.5	V
V_{DD-OFF}	Turn-off Threshold Voltage		8.5	9.5	10.5	V
I_{DD-ST}	Startup Current	$V_{DD}=V_{DD-ON}$ – 0.1V		9	15	μA
I_{DD-OP}	Operating Supply Current	V_{DD}=15V, C_L=1nF		3.0	3.5	mA
V_{DD-OVP}	V_{DD} Over-Voltage Protection Level	Auto Restart	24	25	26	V
$t_{D-VDDOVP}$	V_{DD} Over-Voltage Protection Debounce	Auto Restart		125		μs
$V_{DD-G\ OFF}$	V_{DD} Low-Threshold Voltage to Exit Green-off Mode			V_{DD-OFF} + 1		V
Feedback Input Section						
Z_{FB}	Input Impedance			5		kΩ
$V_{FB-OPEN}$	FB Output High Voltage		5			V
V_{FB-OL}	FB Open-loop Trigger Level		4.3	4.6	4.9	V
t_{D-OLP}	Delay of FB Pin Open-loop Protection			56		ms
V_{FB-N}	Green-Mode Entry FB Voltage		2.60	2.85	3.10	V
V_{FB-G}	Green-Mode Ending FB Voltage			2.2		V
S_G	Green-Mode Modulation Slope	R_I=95kΩ	40	75	100	Hz/mV
Current-Sense Section						
Z_{SENSE}	Input Impedance		10			kΩ
t_{PD}	Delay to Output		40	55	100	ns
V_{STHFL}	Flat Threshold Voltage for Current Limit			1		V
V_{STHVA}	Valley Threshold Voltage for Current Limit		0.75	0.80	0.85	V
t_{LEB}	Leading-Edge Blanking Time		270	320	370	ns
DCY_{SAW}	Duty Cycle of SAW Limit			40		%
Oscillator Section						
f_{OSC}	Frequency — Center Frequency	R_I=95kΩ	65	70	75	kHz
	Frequency — Hopping Range	R_I=95kΩ		±4.9		kHz
T_{HOP}	Hopping Period	R_I=95kΩ		3.7		ms
f_{OSC-G}	Green-Mode Frequency	R_I=95kΩ		20		kHz
f_{DV}	Frequency Variation vs. V_{DD} Deviation	V_{DD}=13.5 to 22V	0	0.02	2.00	%
f_{DT}	Frequency Variation vs. Temp. Deviation	T_A=-20 to 85°C			2	%
Output Section						
DCY_{MAX}	Maximum Duty Cycle		62	67	72	%
V_{GATE-L}	Output Voltage Low	V_{DD}=15V, I_O=20mA			1.4	V
V_{GATE-H}	Output Voltage High	V_{DD}=13.5V, I_O=20mA	8			V
t_r	Rising Time	V_{DD}=15V, C_L=1nF		150		ns
t_f	Falling Time	V_{DD}=15V, C_L=1nF		55		ns
$V_{GATE-CLAMP}$	Output Clamp Voltage	V_{DD}=22V	16	17	18	V

© 2007 Fairchild Semiconductor Corporation

Typical Performance Characteristics

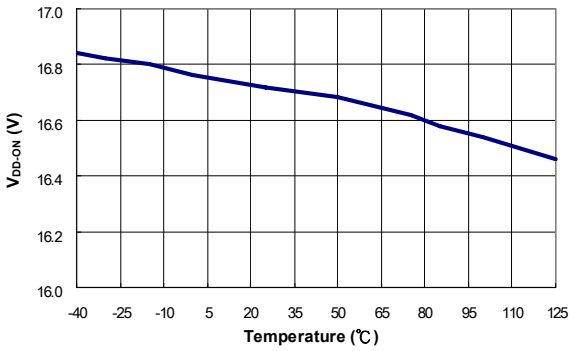

Figure 6. Turn-on Threshold Voltage (V_{DD-ON}) vs. Temperature

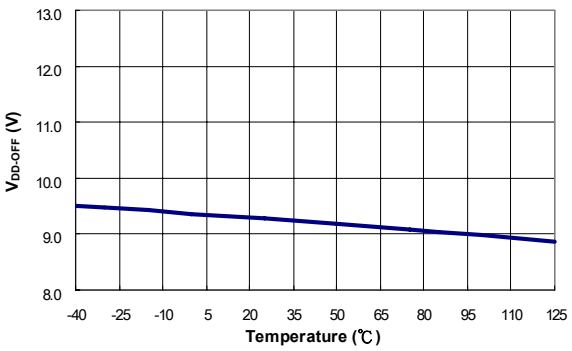

Figure 7. Turn-off Threshold Voltage (V_{DD-ON}) vs. Temperature

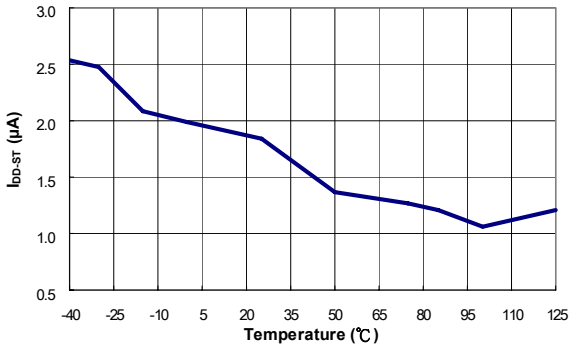

Figure 8. Startup Current (I_{DD-ST}) vs. Temperature

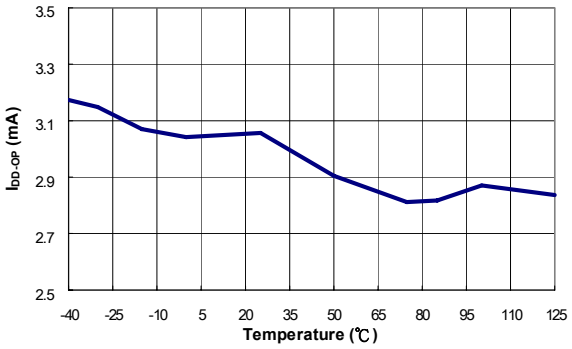

Figure 9. Operating Supply Current (I_{DD-OP}) vs. Temperature

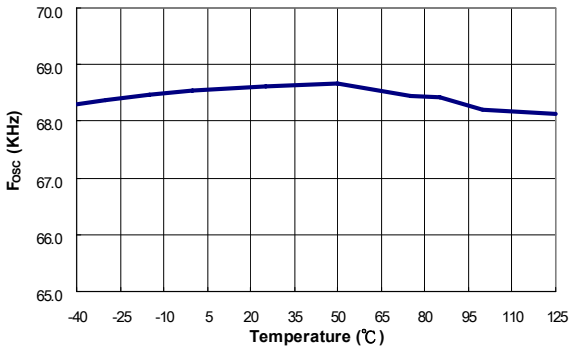

Figure 10. Center Frequency (f_{OSC}) vs. Temperature

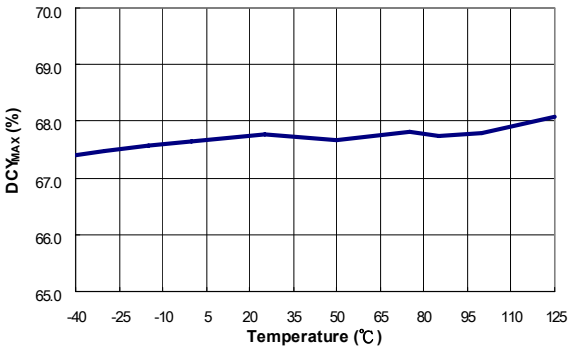

Figure 11. Maximum Duty Cycle (DCY_{MAX}) vs. Temperature

Typical Performance Characteristics

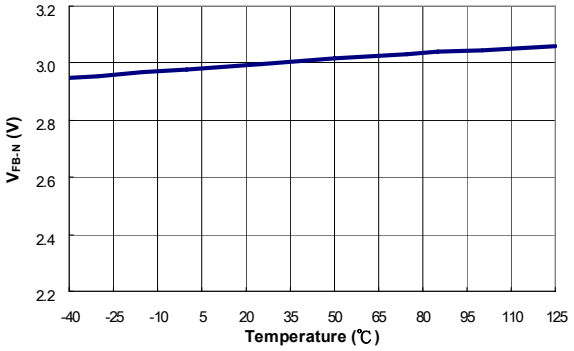

Figure 12. Green-Mode Entry FB Voltage (V_{FB-N}) vs. Temperature

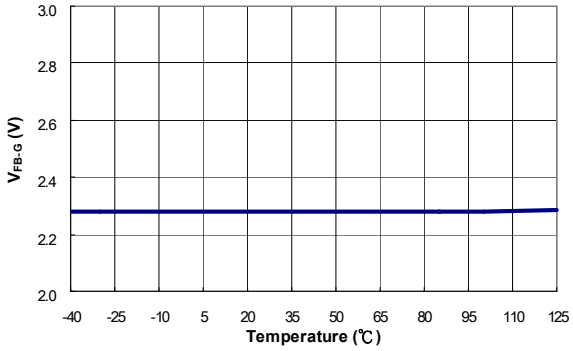

Figure 13. Green-Mode Ending FB Voltage (V_{FB-G}) vs. Temperature

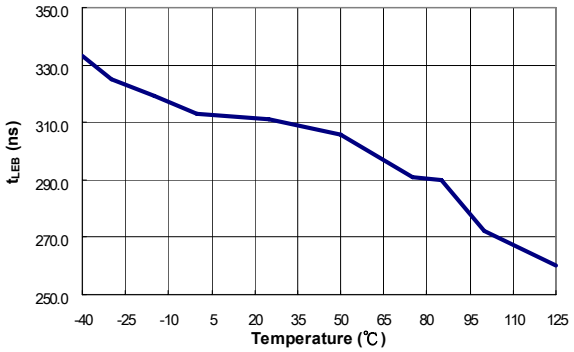

Figure 14. Leading-Edge Blanking Time (t_{LEB}) vs. Temperature

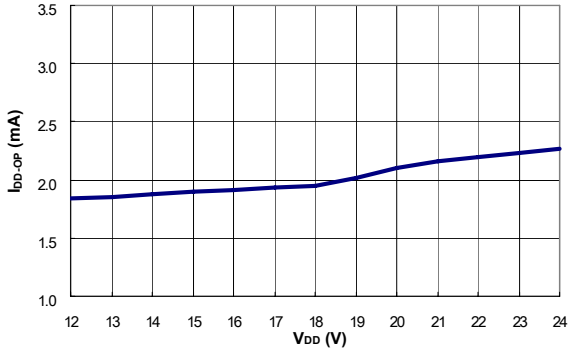

Figure 15. Operating Supply Current vs. V_{DD} Voltage

Operation Description

SG6859A devices integrate many useful designs into one controller for low-power, switch-mode power supplies. The following descriptions highlight some of the features of the SG6859A series.

Startup Current

The startup current is only 9μA. Low startup current allows a startup resistor with high resistance and low-wattage to supply the startup power for the controller. A 1.5MΩ, 0.25W, startup resistor and a 10μF/25V V_{DD} hold-up capacitor are sufficient for an AC-to-DC power adapter with a wide input range ($100V_{AC}$ to $240V_{AC}$).

Operating Current

The operating current has been reduced to 3mA. The low operating current results in higher efficiency and reduces the V_{DD} hold-up capacitance requirement.

Green-Mode Operation

The proprietary green-mode function provides off-time modulation to linearly decrease the switching frequency under light-load conditions. On-time is limited to provide stronger protection against brownouts and other abnormal conditions. The feedback current, which is sampled from the voltage feedback loop, is taken as the reference. Once the feedback current exceeds the threshold current, the switching frequency starts to decrease. This green-mode function dramatically reduces power consumption under light-load and zero-load conditions. Power supplies using the SG6859A can meet even the strictest regulations regarding standby power consumption.

Oscillator Operation

A resistor connected from the RI pin to ground generates a constant current source used to charge an internal capacitor. The charge time determines the internal clock speed and the switching frequency. Increasing the resistance reduces the amplitude of the input current and the switching frequency. A 95kΩ R_I resistor results in a 50μA constant current, I_I, and a 70kHz switching frequency. The relationship between R_I and the switching frequency is:

$$f_{PWM} = \frac{6650}{R_I(k\Omega)}(kHz) \quad (1)$$

The recommended f_{PWM} is from 50kHz to 80kHz.

Leading-Edge Blanking

Each time the power MOSFET is switched on, a turn-on spike occurs at the sense-resistor. To avoid premature termination of the switching pulse, a 320ns leading-edge blanking time is built in. Conventional RC filtering can be omitted. During this blanking period, the current-limit comparator is disabled and cannot switch off the gate driver.

Constant Output Power Limit

When the SENSE voltage across the sense resistor, R_S, reaches the threshold voltage (around 1V), the output GATE drive is turned off following a short propagation delay, t_{PD}. This propagation delay introduces an additional current proportional to $t_{PD} \cdot V_{IN}/L_P$. The propagation delay is nearly constant, regardless of the input line voltage V_{IN}. Higher input line voltages result in larger additional currents. At high input line voltages, the output power limit is higher than at low input line voltages. To compensate for this output power limit variation across a wide AC input range, the threshold voltage is adjusted by adding a positive ramp. This ramp signal rises from 0.8V to 1V, then flattens out at 1V. A smaller threshold voltage forces the output GATE drive to terminate earlier, which reduces the total PWM turn-on time and makes the output power equal to that of low line input. This proprietary internal compensation ensures a constant output power limit for a wide AC input voltage range ($90V_{AC}$ to $264V_{AC}$).

Under-Voltage Lockout (UVLO)

The turn-on and turn-off thresholds are fixed internally at 16.5V and 9.5V. During startup, the hold-up capacitor must be charged to 16.5V through the startup resistor to enable the SG6859A. The hold-up capacitor continues to supply VDD until power can be delivered from the auxiliary winding of the main transformer. V_{DD} must not drop below 9.5V during this startup process. This UVLO hysteresis window ensures that hold-up capacitor is adequate to supply V_{DD} during startup.

Gate Output

The BiCMOS output stage is a fast totem pole gate driver. Cross conduction has been avoided to minimize heat dissipation, increase efficiency, and enhance reliability. The output driver is clamped by an internal 17V Zener diode to protect power MOSFET transistors against undesired over-voltage gate signals.

Built-in Slope Compensation

The sensed voltage across the current-sense resistor is used for current-mode control and pulse-by-pulse current limiting. Built-in slope compensation improves stability and prevents sub-harmonic oscillations due to peak-current mode control. The SG6859A has a synchronized, positively-sloped ramp built-in at each switching cycle. The slope of the ramp is:

$$\frac{0.36 \times Duty}{Duty(max.)} \quad (2)$$

Noise Immunity

Noise from the current sense or the control signal can cause significant pulse-width jitter, particularly in continuous-conduction mode (CCM). While slope compensation helps alleviate these problems, further precautions should still be taken. Good placement and layout practices should be followed. Avoiding long PCB traces and component leads, locating compensation and filter components near the SG6859A, and increasing power MOS gate resistance improve performance.

© 2007 Fairchild Semiconductor Corporation

Applications Information

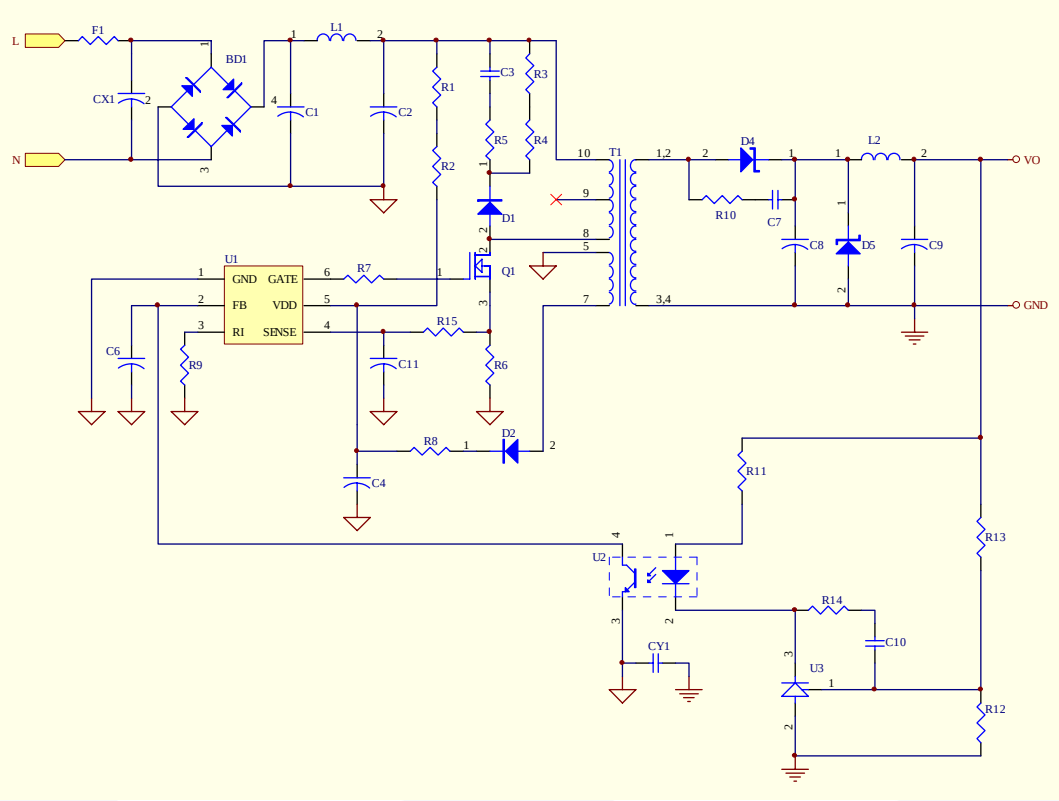

Figure 16. Reference Circuit

Bill of Materials (BOM)

Reference	Component	Reference	Component
BD1	BD 1A/500V	L2	10μH 6mm
CX1 (Optional)	XC 0.1μF	Q1	MOSFET 1A/600V
CY1 (Optional)	YC 1nF/400V (Y1)	R1,R2	R 750KΩ 1206
C1	CC 10nF/500V	R3,R4	R 47KΩ 1206
C2	EC 10μF/400V 105°C	R5	R 47Ω 1206
C3	CC 1nF/500V	R6	R 4.7Ω 1206
C4	EC 10μF/50V	R7	R 100Ω 0805
C6	CC 4.7nF 0805	R8	R 10Ω 1206
C7 (Optional)	CC 1nF/100V 1206	R9	R 100KΩ 0805
C8	EC 470μF/10V 105°C	R10 (Optional)	R 10Ω 1206
C9	EC 220μF/10V 105°C	R11	R 100Ω 1/8W
C10	CC 2.2nF 0805	R12	R 33KΩ 0805
C11	N.C.	R13	R 33KΩ 1/8W
D1	Diode FRI07	R14	R 4.7KΩ 0805
D2	Diode FR102	R15	R 0Ω 0805
D4	Diode SB360	T1	EE-16
D5 (Optional)	ZD 6.8V 0.5W	U1	IC SG6859A
F1	R 1Ω/0.5W	U2	PC817
L1	20mH 6•8mm	U3	TL431

© 2007 Fairchild Semiconductor Corporation

Physical Dimensions

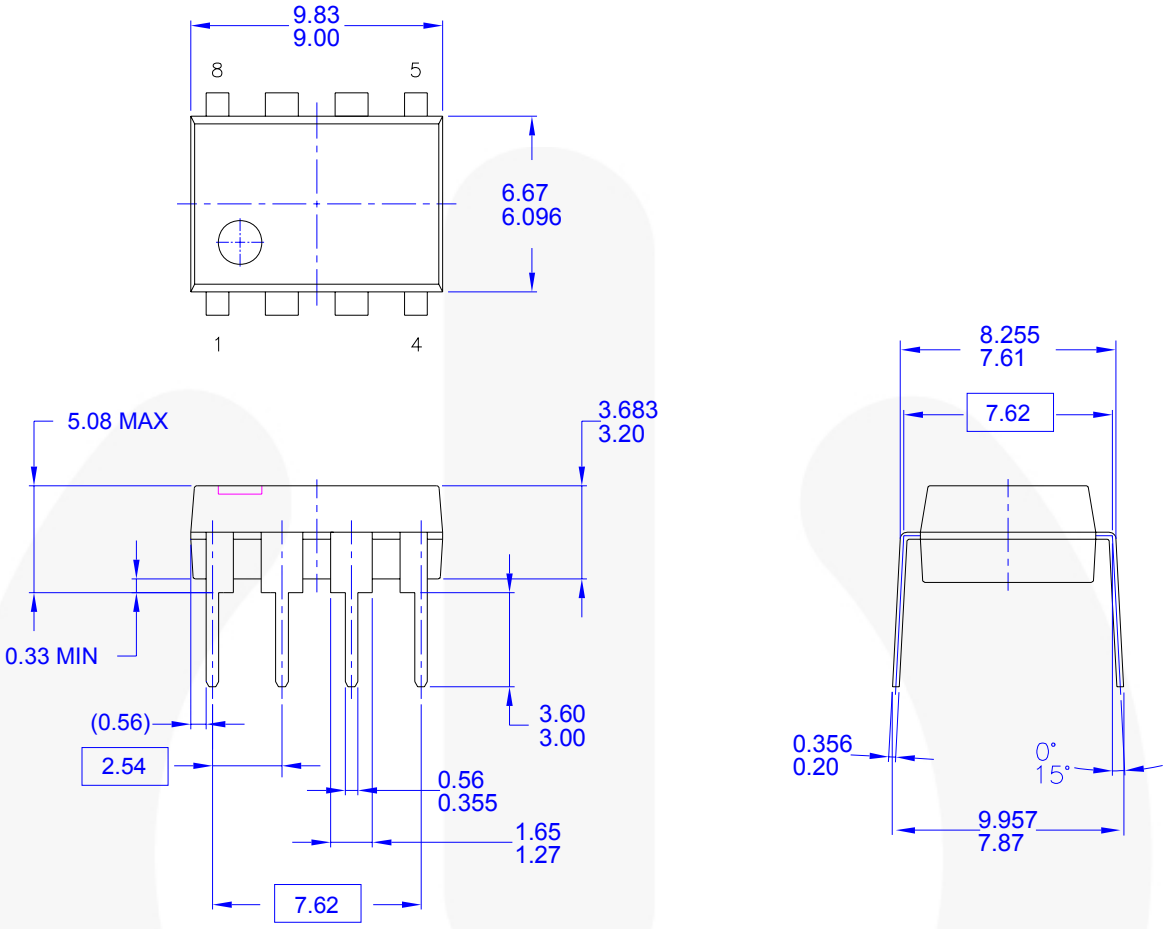

NOTES: UNLESS OTHERWISE SPECIFIED

A) THIS PACKAGE CONFORMS TO JEDEC MS-001 VARIATION BA

B) ALL DIMENSIONS ARE IN MILLIMETERS.

C) DIMENSIONS ARE EXCLUSIVE OF BURRS, MOLD FLASH, AND TIE BAR EXTRUSIONS.

D) DIMENSIONS AND TOLERANCES PER ASME Y14.5M-1994

E) DRAWING FILENAME AND REVSION: MKT-N08FREV2.

Figure 17. 8-Pin, Dual Inline Package (DIP)

Package drawings are provided as a service to customers considering Fairchild components. Drawings may change in any manner without notice. Please note the revision and/or date on the drawing and contact a Fairchild Semiconductor representative to verify or obtain the most recent revision. Package specifications do not expand the terms of Fairchild's worldwide terms and conditions, specifically the warranty therein, which covers Fairchild products.

Always visit Fairchild Semiconductor's online packaging area for the most recent package drawings:
http://www.fairchildsemi.com/packaging/.

Physical Dimensions (Continued)

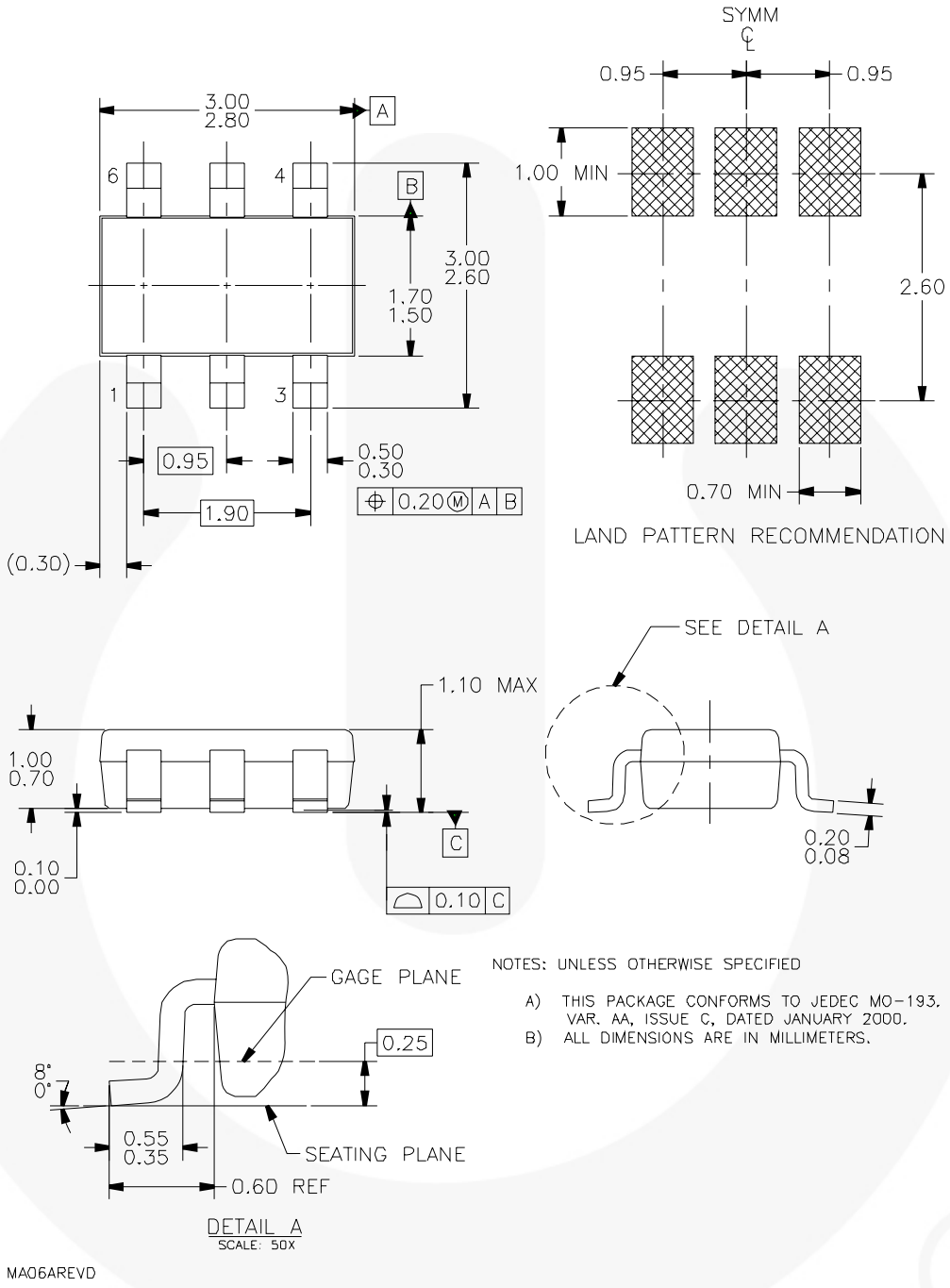

Figure 18. 6-Pin, SSOT-6 Package

Package drawings are provided as a service to customers considering Fairchild components. Drawings may change in any manner without notice. Please note the revision and/or date on the drawing and contact a Fairchild Semiconductor representative to verify or obtain the most recent revision. Package specifications do not expand the terms of Fairchild's worldwide terms and conditions, specifically the warranty therein, which covers Fairchild products.

Always visit Fairchild Semiconductor's online packaging area for the most recent package drawings:
http://www.fairchildsemi.com/packaging/.

FAIRCHILD SEMICONDUCTOR®

TRADEMARKS

The following includes registered and unregistered trademarks and service marks, owned by Fairchild Semiconductor and/or its global subsidiaries, and is not intended to be an exhaustive list of all such trademarks.

AccuPower™
Auto-SPM™
Build it Now™
CorePLUS™
CorePOWER™
CROSSVOLT™
CTL™
Current Transfer Logic™
DEUXPEED®
Dual Cool™
EcoSPARK®
EfficientMax™
ESBC™
Fairchild®
Fairchild Semiconductor®
FACT Quiet Series™
FACT®
FAST®
FastvCore™
FETBench™
FlashWriter®*
FPS™
F-PFS™
FRFET®
Global Power Resource℠
Green FPS™
Green FPS™ e-Series™
Gmax™
GTO™
IntelliMAX™
ISOPLANAR™
MegaBuck™
MICROCOUPLER™
MicroFET™
MicroPak™
MicroPak2™
MillerDrive™
MotionMax™
Motion-SPM™
OptoHiT™
OPTOLOGIC®
OPTOPLANAR®
PDP SPM™
Power-SPM™
PowerTrench®
PowerXS™
Programmable Active Droop™
QFET®
QS™
Quiet Series™
RapidConfigure™
Saving our world, 1mW/W/kW at a time™
SignalWise™
SmartMax™
SMART START™
SPM®
STEALTH™
SuperFET™
SuperSOT™-3
SuperSOT™-6
SuperSOT™-8
SupreMOS®
SyncFET™
Sync-Lock™
SYSTEM GENERAL®*
The Power Franchise®
the power franchise
TinyBoost™
TinyBuck™
TinyCalc™
TinyLogic®
TINYOPTO™
TinyPower™
TinyPWM™
TinyWire™
TriFault Detect™
TRUECURRENT™*
µSerDes™
UHC®
Ultra FRFET™
UniFET™
VCX™
VisualMax™
XS™

* Trademarks of System General Corporation, used under license by Fairchild Semiconductor.

DISCLAIMER

FAIRCHILD SEMICONDUCTOR RESERVES THE RIGHT TO MAKE CHANGES WITHOUT FURTHER NOTICE TO ANY PRODUCTS HEREIN TO IMPROVE RELIABILITY, FUNCTION, OR DESIGN. FAIRCHILD DOES NOT ASSUME ANY LIABILITY ARISING OUT OF THE APPLICATION OR USE OF ANY PRODUCT OR CIRCUIT DESCRIBED HEREIN; NEITHER DOES IT CONVEY ANY LICENSE UNDER ITS PATENT RIGHTS, NOR THE RIGHTS OF OTHERS. THESE SPECIFICATIONS DO NOT EXPAND THE TERMS OF FAIRCHILD'S WORLDWIDE TERMS AND CONDITIONS, SPECIFICALLY THE WARRANTY THEREIN, WHICH COVERS THESE PRODUCTS.

LIFE SUPPORT POLICY

FAIRCHILD'S PRODUCTS ARE NOT AUTHORIZED FOR USE AS CRITICAL COMPONENTS IN LIFE SUPPORT DEVICES OR SYSTEMS WITHOUT THE EXPRESS WRITTEN APPROVAL OF FAIRCHILD SEMICONDUCTOR CORPORATION.

As used herein:

1. Life support devices or systems are devices or systems which, (a) are intended for surgical implant into the body or (b) support or sustain life, and (c) whose failure to perform when properly used in accordance with instructions for use provided in the labeling, can be reasonably expected to result in a significant injury of the user.
2. A critical component in any component of a life support, device, or system whose failure to perform can be reasonably expected to cause the failure of the life support device or system, or to affect its safety or effectiveness.

ANTI-COUNTERFEITING POLICY

Fairchild Semiconductor Corporation's Anti-Counterfeiting Policy. Fairchild's Anti-Counterfeiting Policy is also stated on our external website, www.fairchildsemi.com, under Sales Support.

Counterfeiting of semiconductor parts is a growing problem in the industry. All manufacturers of semiconductor products are experiencing counterfeiting of their parts. Customers who inadvertently purchase counterfeit parts experience many problems such as loss of brand reputation, substandard performance, failed applications, and increased cost of production and manufacturing delays. Fairchild is taking strong measures to protect ourselves and our customers from the proliferation of counterfeit parts. Fairchild strongly encourages customers to purchase Fairchild parts either directly from Fairchild or from Authorized Fairchild Distributors who are listed by country on our web page cited above. Products customers buy either from Fairchild directly or from Authorized Fairchild Distributors are genuine parts, have full traceability, meet Fairchild's quality standards for handling and storage and provide access to Fairchild's full range of up-to-date technical and product information. Fairchild and our Authorized Distributors will stand behind all warranties and will appropriately address any warranty issues that may arise. Fairchild will not provide any warranty coverage or other assistance for parts bought from Unauthorized Sources. Fairchild is committed to combat this global problem and encourage our customers to do their part in stopping this practice by buying direct or from authorized distributors.

PRODUCT STATUS DEFINITIONS

Definition of Terms

Datasheet Identification	Product Status	Definition
Advance Information	Formative / In Design	Datasheet contains the design specifications for product development. Specifications may change in any manner without notice.
Preliminary	First Production	Datasheet contains preliminary data; supplementary data will be published at a later date. Fairchild Semiconductor reserves the right to make changes at any time without notice to improve design.
No Identification Needed	Full Production	Datasheet contains final specifications. Fairchild Semiconductor reserves the right to make changes at any time without notice to improve the design.
Obsolete	Not In Production	Datasheet contains specifications on a product that is discontinued by Fairchild Semiconductor. The datasheet is for reference information only.

Rev. I49

© 2007 Fairchild Semiconductor Corporation

Mouser Electronics

Authorized Distributor

Click to View Pricing, Inventory, Delivery & Lifecycle Information:

Fairchild Semiconductor:

SG6859ADZ

ENTEGRECİ

Bu belge www.entegreci.com üzerinden sunulmaktadır.

Elektronik komponent tedarikinde Entegreci

Entegreci, Eskişehir merkezli, Türkiye geneline satış yapan bir elektronik komponent mağazasıdır. Entegreler (IC), mikrodenetleyiciler, transistörler, diyotlar, pasif elemanlar, konnektörler, modüller ve geliştirme kartları tek adetten seri üretim adetlerine kadar satılır. Ürün sayfalarında güncel stok durumunu, fiyatı ve datasheet bağlantısını bulabilirsiniz.

Parça koduyla arama

Üretici parça numarasını yazın; stok ve fiyatı hemen görün.

www.entegreci.com

Ürün kategorileri

Entegreden kapasitöre tüm elektronik komponent kategorileri.

Kategorilere göz atın

Üreticiler

Aradığınız üreticinin ürünlerini tek sayfada inceleyin.

Üreticileri görün

Toplu alım ve teklif

Listede olmayan ya da yüksek adetli parçalar için teklif isteyin.

Teklif isteyin

www.entegreci.com | **destek@entegreci.com** | **0850 305 90 34**

Entegreci is an online electronic components store based in Türkiye. Search by manufacturer part number to see stock, prices and datasheets for integrated circuits, microcontrollers, transistors, passive components and connectors, or request a quote for parts that are not listed.

Bu sayfa Entegreci tarafından eklenmiştir. Belgenin önceki sayfaları asıl yayıncısına aittir ve içeriği değiştirilmemiştir; en güncel sürüm için belgenin yayıncısına başvurun.