# DATA SHEET

## 74LVC02A
Quad 2-input NOR gate

Product specification
Supersedes data of 1997 Aug 11
IC24 Data Handbook

1998 Apr 28

Philips
Semiconductors

PHILIPS

# Quad 2-input NOR gate 74LVC02A

## FEATURES

- Wide supply range of 1.2V to 3.6V
- Complies with JEDEC standard no. 8-1A
- Inputs accept voltages up to 5.5V
- CMOS low power consumption
- Direct interface with TTL levels
- 5-volt tolerant inputs, for interfacing with 5-volt logic

## DESCRIPTION

The 74LVC02A is a high performance, low-power, low-voltage, Si-gate CMOS device and superior to most advanced CMOS compatible TTL families.

Inputs can be driven from either 3.3 V or 5 V devices. This feature allows the use of these devices as translators in a mixed 3.3 V/5 V environment.

The 74LVC02A provides the 2-input NOR function.

## QUICK REFERENCE DATA

GND = 0 V; $T_{amb}$ = 25°C; $t_r = t_f \leq 2.5$ ns

| SYMBOL | PARAMETER | CONDITIONS | TYPICAL | UNIT |
|---|---|---|---|---|
| $t_{PHL}$<br>$t_{PLH}$ | Propagation delay<br>nA, nB to nY | $C_L$ = 50 pF;<br>$V_{CC}$ = 3.3 V | 2.8 | ns |
| $C_I$ | Input capacitance | | 5.0 | pF |
| $C_{PD}$ | Power dissipation capacitance per gate | Notes 1 and 2 | 28 | pF |

**NOTES:**

1. $C_{PD}$ is used to determine the dynamic power dissipation ($P_D$ in μW)
   $P_D = C_{PD} \times V_{CC}^2 \times f_i + \sum (C_L \times V_{CC}^2 \times f_o)$ where:
   $f_i$ = input frequency in MHz; $C_L$ = output load capacity in pF;
   $f_o$ = output frequency in MHz; $V_{CC}$ = supply voltage in V;
   $\sum (C_L \times V_{CC}^2 \times f_o)$ = sum of the outputs.
2. The condition is $V_I$ = GND to $V_{CC}$.

## ORDERING INFORMATION

| PACKAGES | TEMPERATURE RANGE | OUTSIDE NORTH AMERICA | NORTH AMERICA | DWG NUMBER |
|---|---|---|---|---|
| 14-Pin Plastic SO | –40°C to +85°C | 74LVC02A D | 74LVC02A D | SOT108-1 |
| 14-Pin Plastic SSOP Type II | –40°C to +85°C | 74LVC02A DB | 74LVC02A DB | SOT337-1 |
| 14-Pin Plastic TSSOP Type I | –40°C to +85°C | 74LVC02A PW | 74LVC02APW DH | SOT402-1 |

## PIN CONFIGURATION

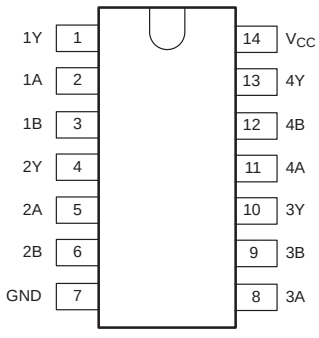


SV00389

## PIN DESCRIPTION

| PIN NUMBER | SYMBOL | NAME AND FUNCTION |
|---|---|---|
| 1, 4, 10, 13 | 1Y – 4Y | Data outputs |
| 2, 5, 8, 11 | 1A – 4A | Data inputs |
| 3, 6, 9, 12 | 1B – 4B | |
| 7 | GND | Ground (0 V) |
| 14 | $V_{CC}$ | Positive supply voltage |

## LOGIC SYMBOL

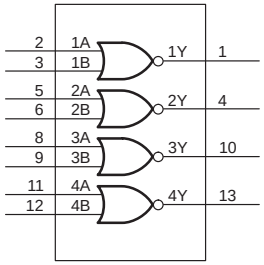


SV00390

## LOGIC DIAGRAM (ONE GATE)

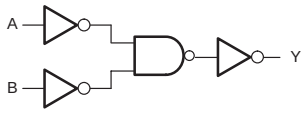


SV00820

## LOGIC SYMBOL (IEEE/IEC)

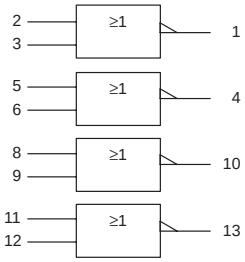


SV00391

## FUNCTION TABLE

| INPUTS | | OUTPUTS |
|---|---|---|
| **nA** | **nB** | **nY** |
| L | L | H |
| L | H | L |
| H | L | L |
| H | H | L |

**NOTES:**
H = HIGH voltage level
L = LOW voltage level

## RECOMMENDED OPERATING CONDITIONS

| SYMBOL | PARAMETER | CONDITIONS | LIMITS | | UNIT |
|---|---|---|---|---|---|
| | | | MIN | MAX | |
| $V_{CC}$ | DC supply voltage (for max. speed performance) | | 2.7 | 3.6 | V |
| $V_{CC}$ | DC supply voltage (for low-voltage applications) | | 1.2 | 3.6 | V |
| $V_I$ | DC Input voltage range | | 0 | 5.5 | V |
| $V_O$ | DC output voltage range | | 0 | $V_{CC}$ | V |
| $T_{amb}$ | Operating ambient temperature range in free-air | | –40 | +85 | °C |
| $t_r$, $t_f$ | Input rise and fall times | $V_{CC}$ = 1.2 to 2.7V<br>$V_{CC}$ = 2.7 to 3.6V | 0<br>0 | 20<br>10 | ns/V |

## ABSOLUTE MAXIMUM RATINGS[1]

Absolute Maximum Rating System (IEC 134)
Voltages are referenced to GND (ground = 0V)

| SYMBOL | PARAMETER | CONDITIONS | RATING | UNIT |
|---|---|---|---|---|
| $V_{CC}$ | DC supply voltage (for max. speed performance) | | –0.5 to +6.5 | V |
| $I_{IK}$ | DC input diode current | $V_I < 0$ | –50 | mA |
| $V_I$ | DC input voltage | Note 2 | –0.5 to +5.5 | V |
| $I_{OK}$ | DC output diode current | $V_O > V_{CC}$ or $V_O < 0$ | ±50 | mA |
| $V_O$ | DC output voltage | Note 2 | –0.5 to $V_{CC}$ + 0.5 | V |
| $I_O$ | DC output source or sink current | $V_O$ = 0 to $V_{CC}$ | ±50 | mA |
| $I_{GND}$, $I_{CC}$ | DC $V_{CC}$ or GND current | | ±100 | mA |
| $T_{stg}$ | Storage temperature range | | –65 to +150 | °C |
| $P_{TOT}$ | Power dissipation per package<br>– plastic mini-pack (SO)<br>– plastic shrink mini-pack (SSOP and TSSOP) | <br>above +70°C derate linearly with 8 mW/K<br>above +60°C derate linearly with 5.5 mW/K | <br>500<br>500 | mW |

**NOTES:**
1. Stresses beyond those listed may cause permanent damage to the device. These are stress ratings only and functional operation of the device at these or any other conditions beyond those indicated under “recommended operating conditions” is not implied. Exposure to absolute-maximum-rated conditions for extended periods may affect device reliability.
2. The input and output voltage ratings may be exceeded if the input and output current ratings are observed.

## DC CHARACTERISTICS

Over recommended operating conditions voltages are referenced to GND (ground = 0V)

| SYMBOL | PARAMETER | TEST CONDITIONS | LIMITS | | | UNIT |
|---|---|---|---|---|---|---|
| | | | Temp = -40°C to +85°C | | | |
| | | | MIN | TYP[1] | MAX | |
| $V_{IH}$ | HIGH level Input voltage | $V_{CC}$ = 1.2V | $V_{CC}$ | | | V |
| | | $V_{CC}$ = 2.7 to 3.6V | 2.0 | | | |
| $V_{IL}$ | LOW level Input voltage | $V_{CC}$ = 1.2V | | | GND | V |
| | | $V_{CC}$ = 2.7 to 3.6V | | | 0.8 | |
| $V_{OH}$ | HIGH level output voltage | $V_{CC}$ = 2.7V; $V_I = V_{IH}$ or $V_{IL}$; $I_O$ = –12mA | $V_{CC}$ – 0.5 | | | V |
| | | $V_{CC}$ = 3.0V; $V_I = V_{IH}$ or $V_{IL}$; $I_O$ = –100µA | $V_{CC}$ – 0.2 | $V_{CC}$ | | |
| | | $V_{CC}$ = 3.0V; $V_I = V_{IH}$ or $V_{IL;}$ $I_O$ = –18mA | $V_{CC}$ – 0.6 | | | |
| | | $V_{CC}$ = 3.0V; $V_I = V_{IH}$ or $V_{IL;}$ $I_O$ = –24mA | $V_{CC}$ – 0.8 | | | |
| $V_{OL}$ | LOW level output voltage | $V_{CC}$ = 2.7V; $V_I = V_{IH}$ or $V_{IL}$; $I_O$ = 12mA | | | 0.40 | V |
| | | $V_{CC}$ = 3.0V; $V_I = V_{IH}$ or $V_{IL}$; $I_O$ = 100µA | | | 0.20 | |
| | | $V_{CC}$ = 3.0V; $V_I = V_{IH}$ or $V_{IL;}$ $I_O$ = 24mA | | | 0.55 | |
| $I_I$ | Input leakage current | $V_{CC}$ = 3.6V; $V_I$ = 5.5V or GND | | ±0.1 | ±5 | µA |
| $I_{CC}$ | Quiescent supply current | $V_{CC}$ = 3.6V; $V_I = V_{CC}$ or GND; $I_O$ = 0 | | 0.1 | 10 | µA |
| $\Delta I_{CC}$ | Additional quiescent supply current per input pin | $V_{CC}$ = 2.7V to 3.6V; $V_I = V_{CC}$ –0.6V; $I_O$ = 0 | | 5 | 500 | µA |

**NOTES:**
1. All typical values are at $V_{CC}$ = 3.3V and $T_{amb}$ = 25°C.

## AC CHARACTERISTICS

GND = 0 V; $t_r = t_f \leq 2.5$ ns; $C_L = 50$ pF

| SYMBOL | PARAMETER | WAVEFORM | LIMITS | | | | | | | UNIT |
|---|---|---|---|---|---|---|---|---|---|---|
| | | | $V_{CC}$ = 3.3V ±0.3V | | | $V_{CC}$ = 2.7V | | | $V_{CC}$ = 1.2V | |
| | | | MIN | TYP[1] | MAX | MIN | TYP[1] | MAX | TYP | |
| $t_{PHL}/t_{PLH}$ | Propagation delay nA, nB to nY | Figures 1, 2 | 1.5 | 2.8 | 4.6 | 1.5 | 3.2 | 5.6 | 11 | ns |

**NOTE:**
1. These typical values are at $V_{CC}$ = 3.3V and $T_{amb}$ = 25°C.

## AC WAVEFORMS

$V_M$ = 1.5 V at $V_{CC} \geq 2.7$ V
$V_M$ = 0.5 • $V_{CC}$ at $V_{CC}$ < 2.7 V
$V_{OL}$ and $V_{OH}$ are the typical output voltage drop that occur with the output load.

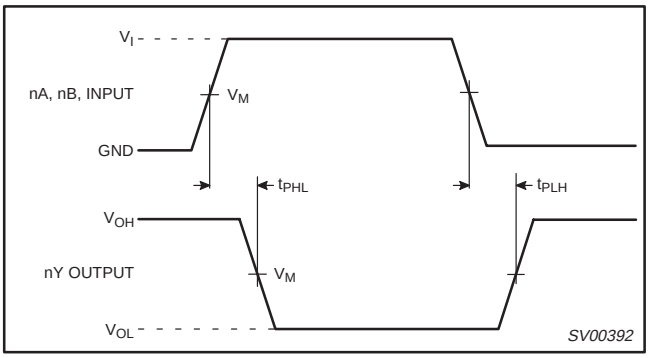


**Waveform 1. Input (nA, nB) to output (nY) propagation delays.**

## TEST CIRCUIT

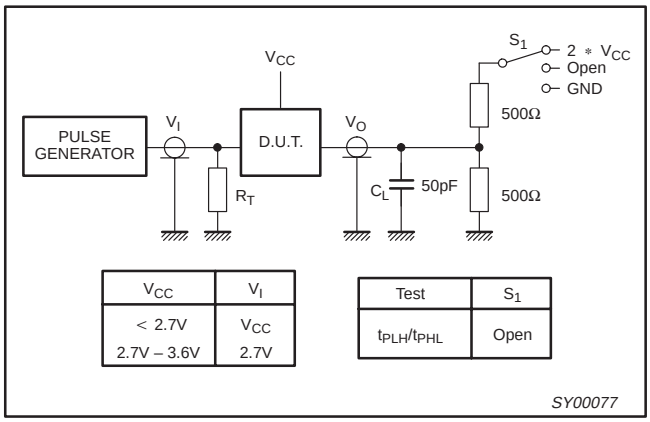


| $V_{CC}$ | $V_I$ |
|---|---|
| < 2.7V | $V_{CC}$ |
| 2.7V – 3.6V | 2.7V |

| Test | $S_1$ |
|---|---|
| $t_{PLH}/t_{PHL}$ | Open |

**Waveform 2. Load circuitry for switching times.**

**SO14: plastic small outline package; 14 leads; body width 3.9 mm** **SOT108-1**

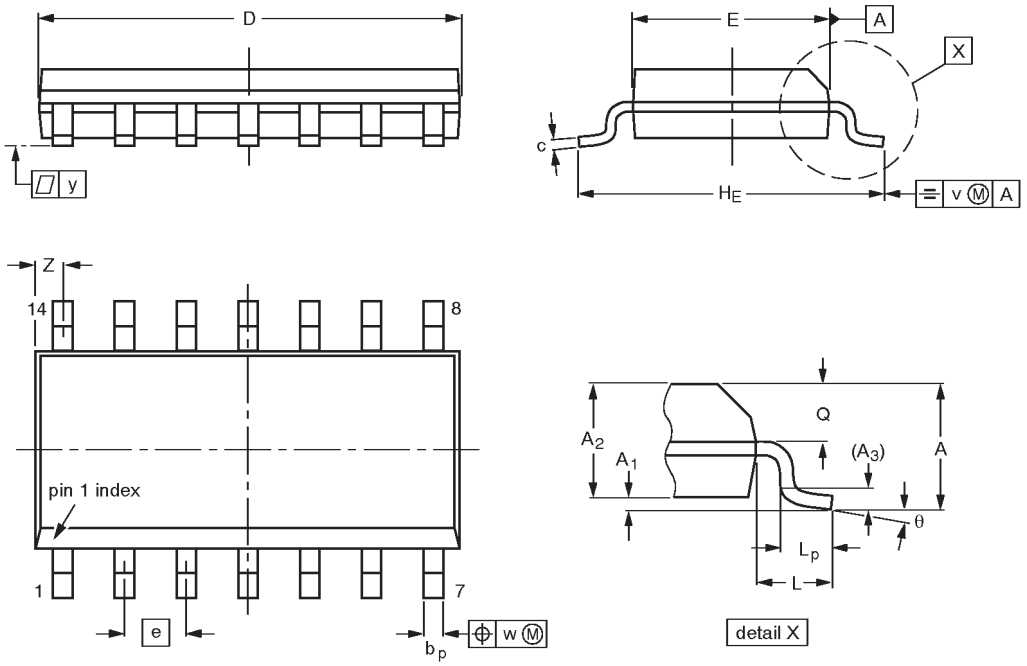


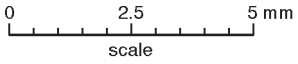


**DIMENSIONS (inch dimensions are derived from the original mm dimensions)**

| UNIT | A max. | $A_1$ | $A_2$ | $A_3$ | $b_p$ | c | $D^{(1)}$ | $E^{(1)}$ | e | $H_E$ | L | $L_p$ | Q | v | w | y | $Z^{(1)}$ | θ |
|---|---|---|---|---|---|---|---|---|---|---|---|---|---|---|---|---|---|---|
| mm | 1.75 | 0.25<br>0.10 | 1.45<br>1.25 | 0.25 | 0.49<br>0.36 | 0.25<br>0.19 | 8.75<br>8.55 | 4.0<br>3.8 | 1.27 | 6.2<br>5.8 | 1.05 | 1.0<br>0.4 | 0.7<br>0.6 | 0.25 | 0.25 | 0.1 | 0.7<br>0.3 | 8°<br>0° |
| inches | 0.069 | 0.0098<br>0.0039 | 0.057<br>0.049 | 0.01 | 0.019<br>0.014 | 0.0098<br>0.0075 | 0.35<br>0.34 | 0.16<br>0.15 | 0.050 | 0.24<br>0.23 | 0.041 | 0.039<br>0.016 | 0.028<br>0.024 | 0.01 | 0.01 | 0.004 | 0.028<br>0.012 | |

**Note**

1. Plastic or metal protrusions of 0.15 mm maximum per side are not included.

| OUTLINE VERSION | REFERENCES | | | | EUROPEAN PROJECTION | ISSUE DATE |
|---|---|---|---|---|---|---|
| | IEC | JEDEC | EIAJ | | | |
| SOT108-1 | 076E06S | MS-012AB | | | | ~~91-08-13~~<br>95-01-23 |

**SSOP14: plastic shrink small outline package; 14 leads; body width 5.3 mm** **SOT337-1**

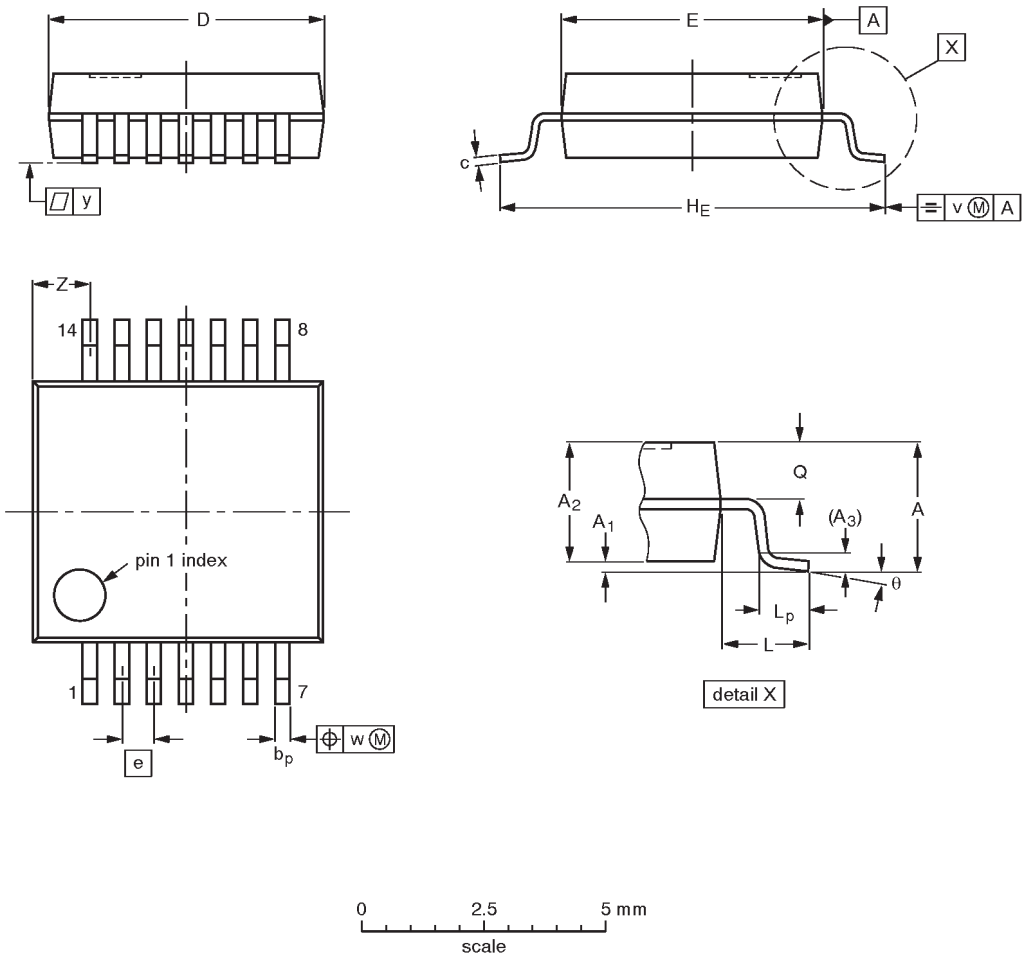


**DIMENSIONS (mm are the original dimensions)**

| UNIT | A max. | $A_1$ | $A_2$ | $A_3$ | $b_p$ | c | D (1) | E (1) | e | $H_E$ | L | $L_p$ | Q | v | w | y | Z (1) | θ |
|---|---|---|---|---|---|---|---|---|---|---|---|---|---|---|---|---|---|---|
| mm | 2.0 | 0.21<br>0.05 | 1.80<br>1.65 | 0.25 | 0.38<br>0.25 | 0.20<br>0.09 | 6.4<br>6.0 | 5.4<br>5.2 | 0.65 | 7.9<br>7.6 | 1.25 | 1.03<br>0.63 | 0.9<br>0.7 | 0.2 | 0.13 | 0.1 | 1.4<br>0.9 | 8°<br>0° |

**Note**

1. Plastic or metal protrusions of 0.25 mm maximum per side are not included.

| OUTLINE VERSION | REFERENCES | | | | EUROPEAN PROJECTION | ISSUE DATE |
|---|---|---|---|---|---|---|
| | IEC | JEDEC | EIAJ | | | |
| SOT337-1 | | MO-150AB | | | | ~~95-02-04~~<br>96-01-18 |

**TSSOP14: plastic thin shrink small outline package; 14 leads; body width 4.4 mm** **SOT402-1**

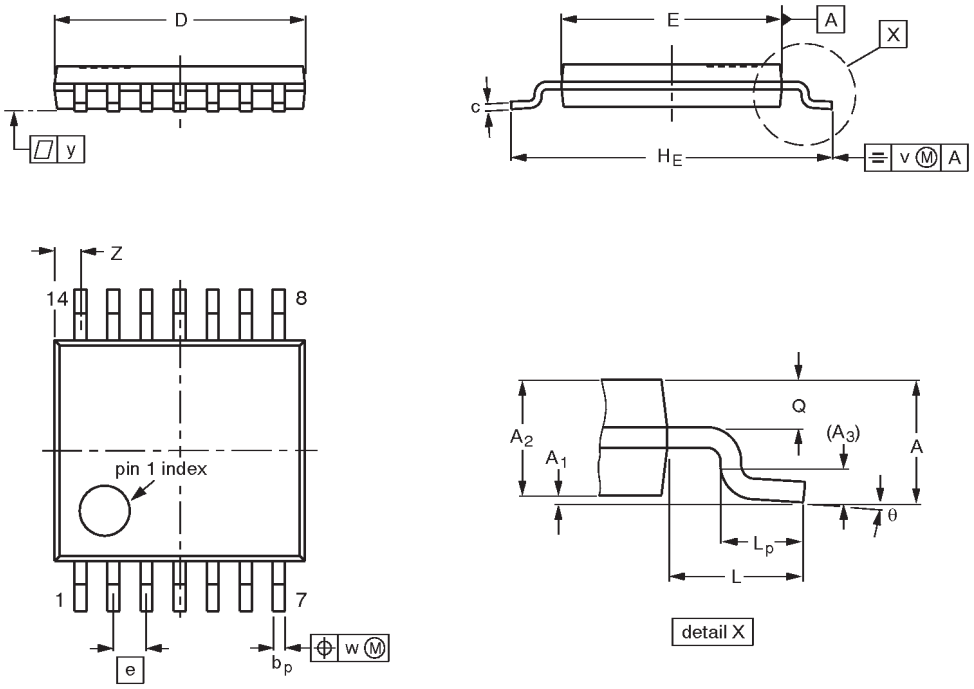


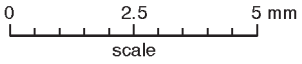


**DIMENSIONS (mm are the original dimensions)**

| UNIT | A max. | $A_1$ | $A_2$ | $A_3$ | $b_p$ | c | D (1) | E (2) | e | $H_E$ | L | $L_p$ | Q | v | w | y | Z (1) | θ |
|---|---|---|---|---|---|---|---|---|---|---|---|---|---|---|---|---|---|---|
| mm | 1.10 | 0.15<br>0.05 | 0.95<br>0.80 | 0.25 | 0.30<br>0.19 | 0.2<br>0.1 | 5.1<br>4.9 | 4.5<br>4.3 | 0.65 | 6.6<br>6.2 | 1.0 | 0.75<br>0.50 | 0.4<br>0.3 | 0.2 | 0.13 | 0.1 | 0.72<br>0.38 | 8°<br>0° |

**Notes**

1. Plastic or metal protrusions of 0.15 mm maximum per side are not included.
2. Plastic interlead protrusions of 0.25 mm maximum per side are not included.

| OUTLINE VERSION | REFERENCES | | | | EUROPEAN PROJECTION | ISSUE DATE |
|---|---|---|---|---|---|---|
| | IEC | JEDEC | EIAJ | | | |
| SOT402-1 | | MO-153 | | | | ~~94-07-12~~<br>95-04-04 |

**NOTES**

## DEFINITIONS

| Data Sheet Identification | Product Status | Definition |
|---|---|---|
| *Objective Specification* | Formative or in Design | This data sheet contains the design target or goal specifications for product development. Specifications may change in any manner without notice. |
| *Preliminary Specification* | Preproduction Product | This data sheet contains preliminary data, and supplementary data will be published at a later date. Philips Semiconductors reserves the right to make changes at any time without notice in order to improve design and supply the best possible product. |
| *Product Specification* | Full Production | This data sheet contains Final Specifications. Philips Semiconductors reserves the right to make changes at any time without notice, in order to improve design and supply the best possible product. |

Philips Semiconductors and Philips Electronics North America Corporation reserve the right to make changes, without notice, in the products, including circuits, standard cells, and/or software, described or contained herein in order to improve design and/or performance. Philips Semiconductors assumes no responsibility or liability for the use of any of these products, conveys no license or title under any patent, copyright, or mask work right to these products, and makes no representations or warranties that these products are free from patent, copyright, or mask work right infringement, unless otherwise specified. Applications that are described herein for any of these products are for illustrative purposes only. Philips Semiconductors makes no representation or warranty that such applications will be suitable for the specified use without further testing or modification.

LIFE SUPPORT APPLICATIONS

Philips Semiconductors and Philips Electronics North America Corporation Products are not designed for use in life support appliances, devices, or systems where malfunction of a Philips Semiconductors and Philips Electronics North America Corporation Product can reasonably be expected to result in a personal injury. Philips Semiconductors and Philips Electronics North America Corporation customers using or selling Philips Semiconductors and Philips Electronics North America Corporation Products for use in such applications do so at their own risk and agree to fully indemnify Philips Semiconductors and Philips Electronics North America Corporation for any damages resulting from such improper use or sale.

**Philips Semiconductors**
**811 East Arques Avenue**
**P.O. Box 3409**
**Sunnyvale, California 94088–3409**
**Telephone 800-234-7381**

© Copyright Philips Electronics North America Corporation 1998
All rights reserved. Printed in U.S.A.

print code Date of release: 05-96

Document order number: 9397-750-04477

*Let's make things better.*

**Philips Semiconductors**

PHILIPS

This datasheet has been download from:

www.datasheetcatalog.com

Datasheets for electronics components.

ENTEGRECİ

Bu belge www.entegreci.com üzerinden sunulmaktadır.

# Elektronik komponent tedarikinde Entegreci

Entegreci, Eskişehir merkezli, Türkiye geneline satış yapan bir elektronik komponent mağazasıdır. Entegreler (IC), mikrodenetleyiciler, transistörler, diyotlar, pasif elemanlar, konnektörler, modüller ve geliştirme kartları tek adetten seri üretim adetlerine kadar satılır. Ürün sayfalarında güncel stok durumunu, fiyatı ve datasheet bağlantısını bulabilirsiniz.

### Parça koduyla arama

Üretici parça numarasını yazın; stok ve fiyatı hemen görün.

**www.entegreci.com**

### Ürün kategorileri

Entegreden kapasitöre tüm elektronik komponent kategorileri.

**Kategorilere göz atın**

### Üreticiler

Aradığınız üreticinin ürünlerini tek sayfada inceleyin.

**Üreticileri görün**

### Toplu alım ve teklif

Listede olmayan ya da yüksek adetli parçalar için teklif isteyin.

**Teklif isteyin**

**www.entegreci.com** | **destek@entegreci.com** | **0850 305 90 34**

Entegreci is an online electronic components store based in Türkiye. Search by manufacturer part number to see stock, prices and datasheets for integrated circuits, microcontrollers, transistors, passive components and connectors, or request a quote for parts that are not listed.

Bu sayfa Entegreci tarafından eklenmiştir. Belgenin önceki sayfaları asıl yayıncısına aittir ve içeriği değiştirilmemiştir; en güncel sürüm için belgenin yayıncısına başvurun.