National Semiconductor

January 1988

MM54HC74A/MM74HC74A
Dual D Flip-Flop with Preset and Clear

General Description

The MM54HC74A/MM74HC74A utilizes advanced silicon-gate CMOS technology to achieve operating speeds similar to the equivalent LS-TTL part. It possesses the high noise immunity and low power consumption of standard CMOS integrated circuits, along with the ability to drive 10 LS-TTL loads.

This flip-flop has independent data, preset, clear, and clock inputs and Q and $\overline{Q}$ outputs. The logic level present at the data input is transferred to the output during the positive-going transition of the clock pulse. Preset and clear are independent of the clock and accomplished by a low level at the appropriate input.

The 54HC/74HC logic family is functionally and pinout compatible with the standard 54LS/74LS logic family. All inputs are protected from damage due to static discharge by internal diode clamps to V_{CC} and ground.

Features

- Typical propagation delay: 20 ns
- Wide power supply range: 2–6V
- Low quiescent current: 40 μA maximum (74HC Series)
- Low input current: 1 μA maximum
- Fanout of 10 LS-TTL loads

Connection and Logic Diagrams

Dual-In-Line Package

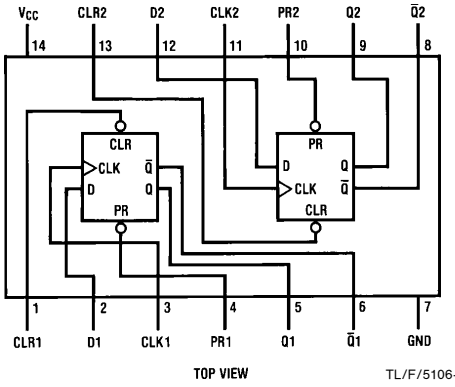

TOP VIEW

TL/F/5106–1

Order Number MM54HC74A or MM74HC74A

Truth Table

Inputs				Outputs	
PR	CLR	CLK	D	Q	$\overline{Q}$
L	H	X	X	H	L
H	L	X	X	L	H
L	L	X	X	H*	H*
H	H	↑	H	H	L
H	H	↑	L	L	H
H	H	L	X	Q0	$\overline{Q}$0

Note: Q0 = the level of Q before the indicated input conditions were established.

* This configuration is nonstable; that is, it will not persist when preset and clear inputs return to their inactive (high) level.

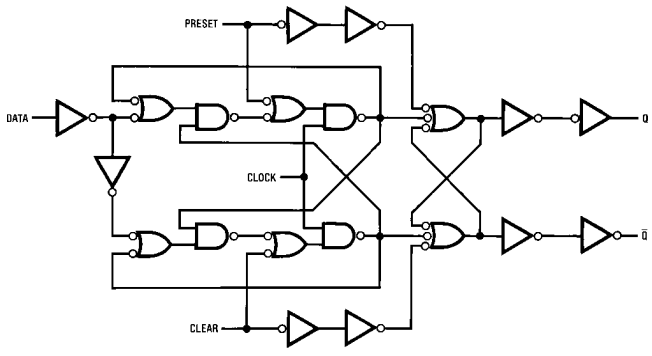

TL/F/5106–2

©1995 National Semiconductor Corporation

RRD-B30M105/Printed in U. S. A.

Absolute Maximum Ratings (Notes 1 & 2)

If Military/Aerospace specified devices are required, please contact the National Semiconductor Sales Office/Distributors for availability and specifications.

Supply Voltage (V_{CC})	−0.5 to +7.0V
DC Input Voltage (V_{IN})	−1.5 to V_{CC} +1.5V
DC Output Voltage (V_{OUT})	−0.5 to V_{CC} +0.5V
Clamp Diode Current (I_{IK}, I_{OK})	±20 mA
DC Output Current, per pin (I_{OUT})	±25 mA
DC V_{CC} or GND Current, per pin (I_{CC})	±50 mA
Storage Temperature Range (T_{STG})	−65°C to +150°C
Power Dissipation (P_D) (Note 3)	600 mW
S.O. Package only	500 mW
Lead Temp. (T_L) (Soldering 10 seconds)	260°C

Operating Conditions

		Min	Max	Units
Supply Voltage (V_{CC})		2	6	V
DC Input or Output Voltage (V_{IN}, $_{OUT}$)		0	V_{CC}	V
Operating Temp. Range (T_A)				
MM74HC		−40	+85	°C
MM54HC		−55	+125	°C
Input Rise or Fall Times (t_r, t_f)	V_{CC} = 2.0V		1000	ns
	V_{CC} = 4.5V		500	ns
	V_{CC} = 6.0V		400	ns

DC Electrical Characteristics (Note 4)

Symbol	Parameter	Conditions	V_{CC}	T_A = 25°C	74HC T_A = −40 to 85°C	54HC T_A = −55 to 125°C	Units
				Typ	Guaranteed Limits		
V_{IH}	Minimum High Level Input Voltage		2.0V		1.5	1.5	V
			4.5V		3.15	3.15	V
			6.0V		4.2	4.2	V
V_{IL}	Maximum Low Level Input Voltage**		2.0V		0.5	0.5	V
			4.5V		1.35	1.35	V
			6.0V		1.8	1.8	V
V_{OH}	Minimum High Level Output Voltage	V_{IN} = V_{IH} or V_{IL} $\|I_{OUT}\| \leq 20\ \mu A$	2.0V	2.0	1.9	1.9	V
			4.5V	4.5	4.4	4.4	V
			6.0V	6.0	5.9	5.9	V
		V_{IN} = V_{IH} or V_{IL} $\|I_{OUT}\| \leq 4.0$ mA	4.5V	4.3	3.98	3.84	3.7	V
		$\|I_{OUT}\| \leq 5.2$ mA	6.0V	5.2	5.48	5.34	5.2	V
V_{OL}	Maximum Low Level Output Voltage	V_{IN} = V_{IH} or V_{IL} $\|I_{OUT}\| \leq 20\ \mu A$	2.0V	0	0.1	0.1	0.1	V
			4.5V	0	0.1	0.1	0.1	V
			6.0V	0	0.1	0.1	0.1	V
		V_{IN} = V_{IH} or V_{IL} $\|I_{OUT}\| \leq 4.0$ mA	4.5V	0.2	0.26	0.33	0.4	V
		$\|I_{OUT}\| \leq 5.2$ mA	6.0V	0.2	0.26	0.33	0.4	V
I_{IN}	Maximum Input Current	V_{IN} = V_{CC} or GND	6.0V		±0.1	±1.0	±1.0	μA
I_{CC}	Maximum Quiescent Supply Current	V_{IN} = V_{CC} or GND I_{OUT} = 0 μA	6.0V		4.0	40	80	μA

Note 1: Absolute Maximum Ratings are those values beyond which damage to the device may occur.

Note 2: Unless otherwise specified all voltages are referenced to ground.

Note 3: Power Dissipation temperature derating — plastic "N" package: −12 mW/°C from 65°C to 85°C; ceramic "J" package: −12 mW/°C from 100°C to 125°C.

Note 4: For a power supply of 5V ±10% the worst case output voltages (V_{OH}, and V_{OL}) occur for HC at 4.5V. Thus the 4.5V values should be used when designing with this supply. Worst case V_{IH} and V_{IL} occur at V_{CC} = 5.5V and 4.5V respectively. (The V_{IH} value at 5.5V is 3.85V.) The worst case leakage current (I_{IN}, I_{CC}, and I_{OZ}) occur for CMOS at the higher voltage and so the 6.0V values should be used.

**V_{IL} limits are currently tested at 20% of V_{CC}. The above V_{IL} specification (30% of V_{CC}) will be implemented no later than Q1, CY'89.

AC Electrical Characteristics $V_{CC}=5V$, $T_A=25°C$, $C_L=15$ pF, $t_r=t_f=6$ ns

Symbol	Parameter	Conditions	Typ	Guaranteed Limit	Units
f_{MAX}	Maximum Operating Frequency		72	30	MHz
t_{PHL}, t_{PLH}	Maximum Propagation Delay Clock to Q or $\overline{Q}$		10	30	ns
t_{PHL}, t_{PLH}	Maximum Propagation Delay Preset or Clear to Q or $\overline{Q}$		17	40	ns
t_{REM}	Minimum Removal Time, Preset or Clear to Clock		6	5	ns
t_s	Minimum Setup Time Data to Clock		10	20	ns
t_H	Minimum Hold Time Clock to Data		0	0	ns
t_W	Minimum Pulse Width Clock, Preset or Clear		8	16	ns

AC Electrical Characteristics $C_L=50$ pF, $t_r=t_f=6$ ns (unless otherwise specified)

Symbol	Parameter	Conditions	V_{CC}	$T_A=25°C$	74HC $T_A=-40$ to $85°C$		54HC $T_A=-55$ to $125°C$	Units
				Typ	Guaranteed Limits			
f_{MAX}	Maximum Operating Frequency		2.0V 4.5V 6.0V	22 72 94	6 30 35	5 24 28	4 20 24	MHz MHz MHz
t_{PHL}, t_{PLH}	Maximum Propagation Delay Clock to Q or $\overline{Q}$		2.0V 4.5V 6.0V	34 12 10	110 22 19	140 28 24	165 33 28	ns ns ns
t_{PHL}, t_{PLH}	Maximum Propagation Delay Preset or Clear To Q or $\overline{Q}$		2.0V 4.5V 6.0V	66 20 16	150 30 26	190 38 33	225 45 38	ns ns ns
t_{REM}	Minimum Removal Time Preset or Clear To Clock		2.0V 4.5V 6.0V	20 6 5	50 10 9	65 13 11	75 15 13	ns ns ns
t_s	Minimum Setup Time Data to Clock		2.0V 4.5V 6.0V	35 10 8	80 16 14	100 20 17	120 24 20	ns ns ns
t_H	Minimum Hold Time Clock to Data		2.0V 4.5V 6.0V		0 0 0	0 0 0	0 0 0	ns ns ns
t_W	Minimum, Pulse Width Clock, Preset or Clear		2.0V 4.5V 6.0V	30 9 8	80 16 14	101 20 17	119 24 20	ns ns ns
t_{TLH}, t_{THL}	Maximum Output Rise and Fall Time		2.0V 4.5V 6.0V	25 7 6	75 15 13	95 19 16	110 22 19	ns ns ns
t_r, t_f	Maximum Input Rise and Fall Time		2.0V 4.5V 6.0V		1000 500 400	1000 500 400	1000 500 400	ns ns ns
C_{PD}	Power Dissipation Capacitance (Note 5)	(per flip-flop)		80				pF
C_{IN}	Maximum Input Capacitance			5	10	10	10	pF

Note 5: C_{PD} determines the no load dynamic power consumption, $P_D=C_{PD}\,V_{CC}^2\,f+I_{CC}\,V_{CC}$, and the no load dynamic current consumption, $I_S=C_{PD}\,V_{CC}\,f+I_{CC}$.

Physical Dimensions inches (millimeters)

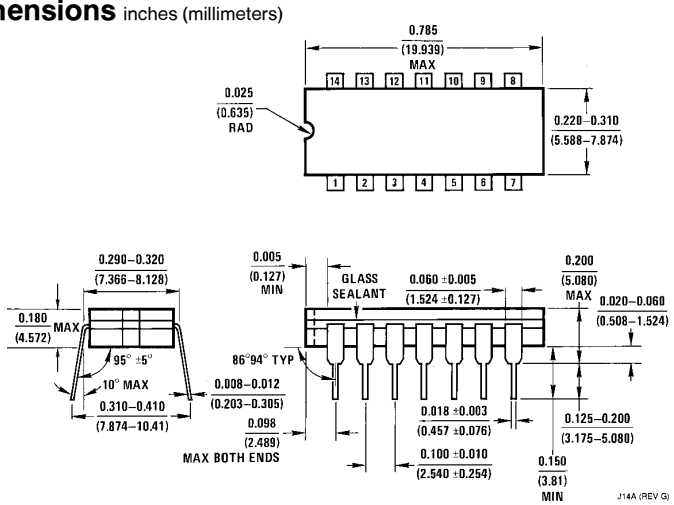

Order Number MM54HC74J or MM74HC74J
NS Package J14A

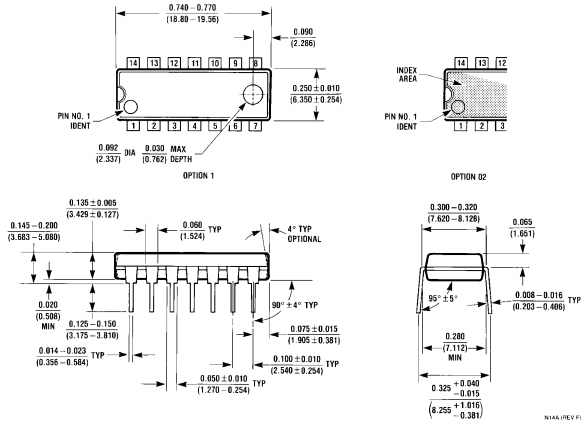

Order Number MM74HC74N
NS Package N14A

LIFE SUPPORT POLICY

NATIONAL'S PRODUCTS ARE NOT AUTHORIZED FOR USE AS CRITICAL COMPONENTS IN LIFE SUPPORT DEVICES OR SYSTEMS WITHOUT THE EXPRESS WRITTEN APPROVAL OF THE PRESIDENT OF NATIONAL SEMICONDUCTOR CORPORATION. As used herein:

1. Life support devices or systems are devices or systems which, (a) are intended for surgical implant into the body, or (b) support or sustain life, and whose failure to perform, when properly used in accordance with instructions for use provided in the labeling, can be reasonably expected to result in a significant injury to the user.
2. A critical component is any component of a life support device or system whose failure to perform can be reasonably expected to cause the failure of the life support device or system, or to affect its safety or effectiveness.

National Semiconductor Corporation
1111 West Bardin Road
Arlington, TX 76017
Tel: 1(800) 272-9959
Fax: 1(800) 737-7018

National Semiconductor Europe
Fax: (+49) 0-180-530 85 86
Email: cnjwge@tevm2.nsc.com
Deutsch Tel: (+49) 0-180-530 85 85
English Tel: (+49) 0-180-532 78 32
Français Tel: (+49) 0-180-532 93 58
Italiano Tel: (+49) 0-180-534 16 80

National Semiconductor Hong Kong Ltd.
13th Floor, Straight Block,
Ocean Centre, 5 Canton Rd.
Tsimshatsui, Kowloon
Hong Kong
Tel: (852) 2737-1600
Fax: (852) 2736-9960

National Semiconductor Japan Ltd.
Tel: 81-043-299-2309
Fax: 81-043-299-2408

National does not assume any responsibility for use of any circuitry described, no circuit patent licenses are implied and National reserves the right at any time without notice to change said circuitry and specifications.

This datasheet has been download from:

www.datasheetcatalog.com

Datasheets for electronics components.

National Semiconductor was acquired by Texas Instruments.

http://www.ti.com/corp/docs/investor_relations/pr_09_23_2011_national_semiconductor.html

This file is the datasheet for the following electronic components:

MM74HC74A - http://www.ti.com/product/mm74hc74a?HQS=TI-null-null-dscatalog-df-pf-null-wwe

ENTEGRECİ

Bu belge www.entegreci.com üzerinden sunulmaktadır.

Elektronik komponent tedarikinde Entegreci

Entegreci, Eskişehir merkezli, Türkiye geneline satış yapan bir elektronik komponent mağazasıdır. Entegreler (IC), mikrodenetleyiciler, transistörler, diyotlar, pasif elemanlar, konnektörler, modüller ve geliştirme kartları tek adetten seri üretim adetlerine kadar satılır. Ürün sayfalarında güncel stok durumunu, fiyatı ve datasheet bağlantısını bulabilirsiniz.

Parça koduyla arama

Üretici parça numarasını yazın; stok ve fiyatı hemen görün.

www.entegreci.com

Ürün kategorileri

Entegreden kapasitöre tüm elektronik komponent kategorileri.

Kategorilere göz atın

Üreticiler

Aradığınız üreticinin ürünlerini tek sayfada inceleyin.

Üreticileri görün

Toplu alım ve teklif

Listede olmayan ya da yüksek adetli parçalar için teklif isteyin.

Teklif isteyin

www.entegreci.com | **destek@entegreci.com** | **0850 305 90 34**

Entegreci is an online electronic components store based in Türkiye. Search by manufacturer part number to see stock, prices and datasheets for integrated circuits, microcontrollers, transistors, passive components and connectors, or request a quote for parts that are not listed.

Bu sayfa Entegreci tarafından eklenmiştir. Belgenin önceki sayfaları asıl yayıncısına aittir ve içeriği değiştirilmemiştir; en güncel sürüm için belgenin yayıncısına başvurun.