March 1998

DM74LS02
Quad 2-Input NOR Gates

General Description

This device contains four independent gates each of which performs the logic NOR function.

Features

- Alternate Military/Aerospace device (54LS02) is available. Contact a Fairchild Semiconductor Sales Office/Distributor for specifications

Connection Diagram

Dual-In-Line Package

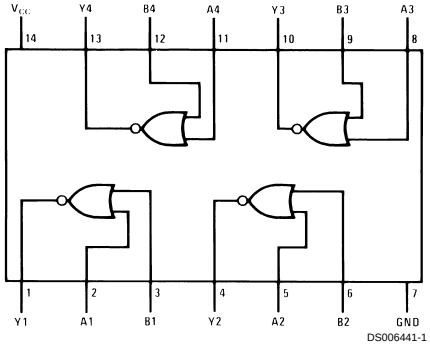

DS006441-1

Order Number 54LS02DMQB, 54LS02FMQB, 54LS02LMQB, DM54LS02J, DM54LS02W, DM74LS02M or DM74LS02N
See Package Number E20A, J14A, M14A, N14A or W14B

Function Table

$Y = \overline{A + B}$

Inputs		Output
A	B	Y
L	L	H
L	H	L
H	L	L
H	H	L

H = High Logic Level
L = Low Logic Level

© 1998 Fairchild Semiconductor Corporation

Absolute Maximum Ratings (Note 1)

Supply Voltage	7V
Input Voltage	7V
Operating Free Air Temperature Range	
DM54LS and 54LS	−55˚C to +125˚C
DM74LS	0˚C to +70˚C
Storage Temperature Range	−65˚C to +150˚C

Note 1: *The "Absolute Maximum Ratings" are those values beyond which the safety of the device cannot be guaranteed. The device should not be operated at these limits. The parametric values defined in the "Electrical Characteristics" table are not guaranteed at the absolute maximum ratings. The "Recommended Operating Conditions" table will define the conditions for actual device operation.*

Recommended Operating Conditions

Symbol	Parameter	DM54LS02			DM74LS02			Units
		Min	Nom	Max	Min	Nom	Max	
V_{CC}	Supply Voltage	4.5	5	5.5	4.75	5	5.25	V
V_{IH}	High Level Input Voltage	2			2			V
V_{IL}	Low Level Input Voltage			0.7			0.8	V
I_{OH}	High Level Output Current			−0.4			−0.4	mA
I_{OL}	Low Level Output Current			4			8	mA
T_A	Free Air Operating Temperature	−55		125	0		70	˚C

Electrical Characteristics

over recommended operating free air temperature range (unless otherwise noted)

Symbol	Parameter	Conditions		Min	Typ (Note 2)	Max	Units
V_I	Input Clamp Voltage	V_{CC} = Min, I_I = −18 mA				−1.5	V
V_{OH}	High Level Output Voltage	V_{CC} = Min, I_{OH} = Max, V_{IL} = Max	DM54	2.5	3.4		V
			DM74	2.7	3.4		
V_{OL}	Low Level Output Voltage	V_{CC} = Min, I_{OL} = Max, V_{IH} = Min	DM54		0.25	0.4	V
			DM74		0.35	0.5	
		I_{OL} = 4 mA, V_{CC} = Min	DM74		0.25	0.4	
I_I	Input Current @ Max Input Voltage	V_{CC} = Max, V_I = 7V				0.1	mA
I_{IH}	High Level Input Current	V_{CC} = Max, V_I = 2.7V				20	µA
I_{IL}	Low Level Input Current	V_{CC} = Max, V_I = 0.4V				−0.40	mA
I_{OS}	Short Circuit Output Current	V_{CC} = Max (Note 3)	DM54	−20		−100	mA
			DM74	−20		−100	
I_{CCH}	Supply Current with Outputs High	V_{CC} = Max			1.6	3.2	mA
I_{CCL}	Supply Current with Outputs Low	V_{CC} = Max			2.8	5.4	mA

Switching Characteristics

at V_{CC} = 5V and T_A = 25˚C (See Section 1 for Test Waveforms and Output Load)

Symbol	Parameter	R_L = 2 kΩ				Units
		C_L = 15 pF		C_L = 50 pF		
		Min	Max	Min	Max	
t_{PLH}	Propagation Delay Time Low to High Level Output		13		18	ns
t_{PHL}	Propagation Delay Time High to Low Level Output		10		15	ns

Note 2: All typicals are at V_{CC} = 5V, T_A = 25˚C.

Note 3: Not more than one output should be shorted at a time, and the duration should not exceed one second.

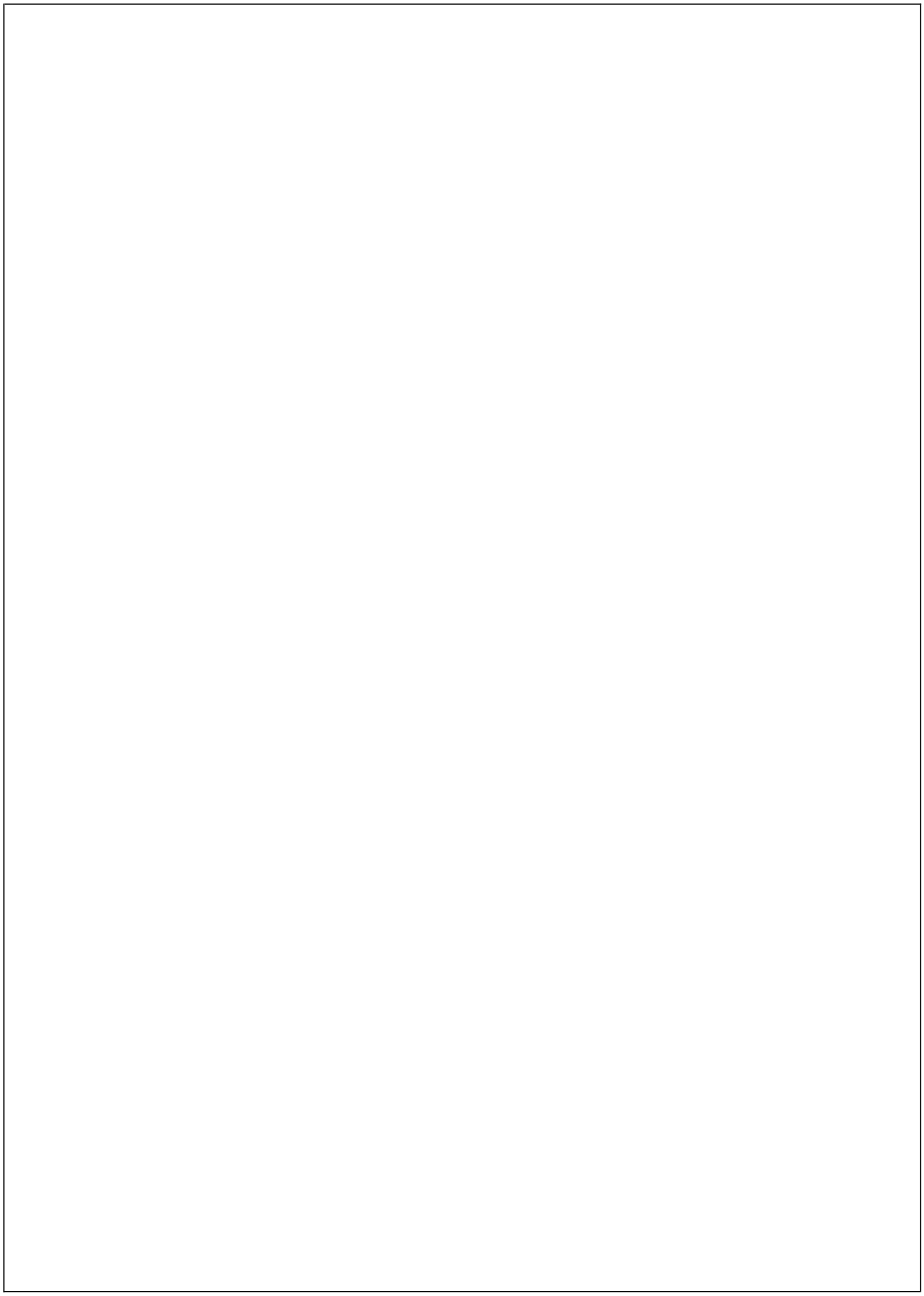

Physical Dimensions inches (millimeters) unless otherwise noted

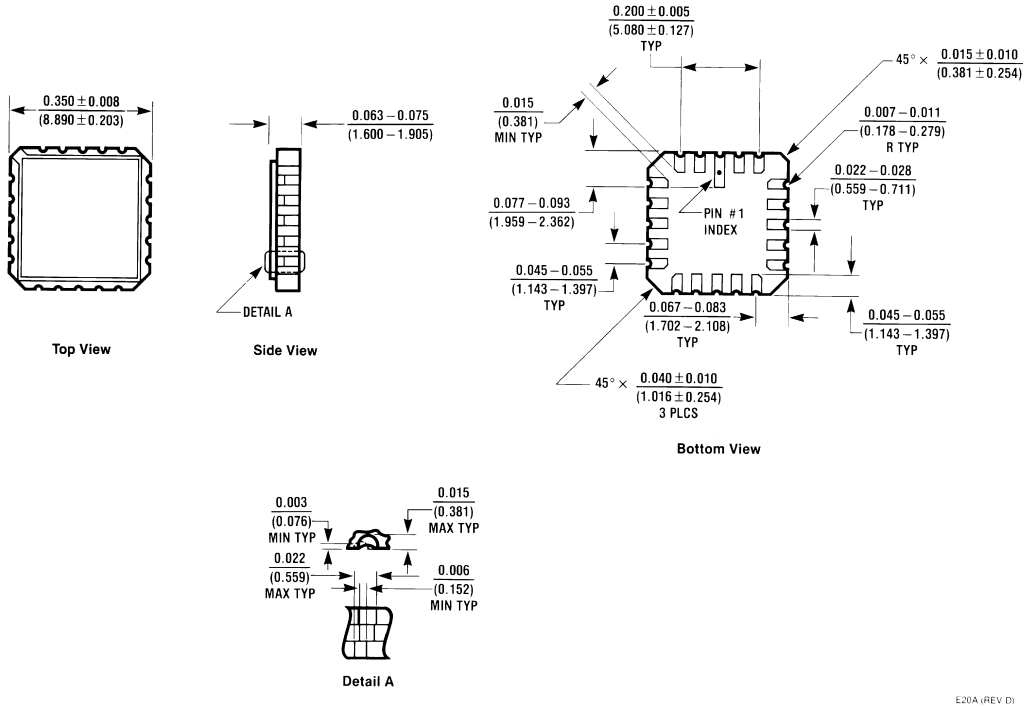

Ceramic Leadless Chip Carrier Package (E)
Order Number 54LS02LMQB
Package Number E20A

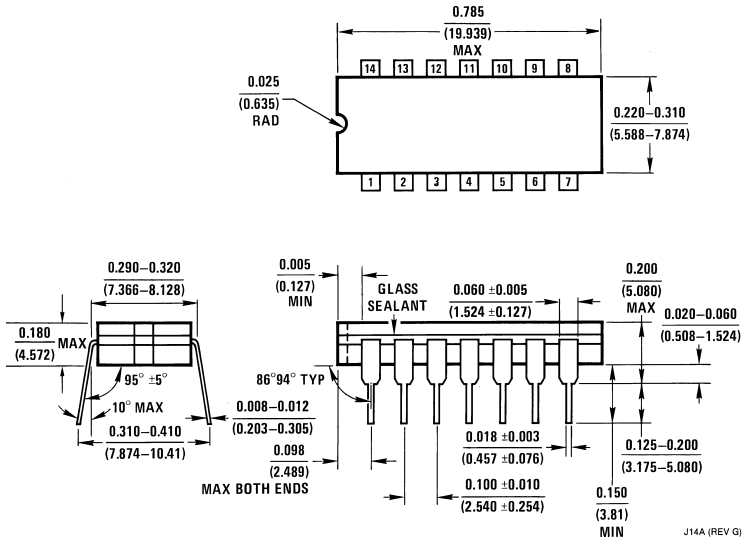

14-Lead Ceramic Dual-In-Line Package (J)
Order Number 54LS02DMQB or DM54LS02J
Package Number J14A

Physical Dimensions inches (millimeters) unless otherwise noted (Continued)

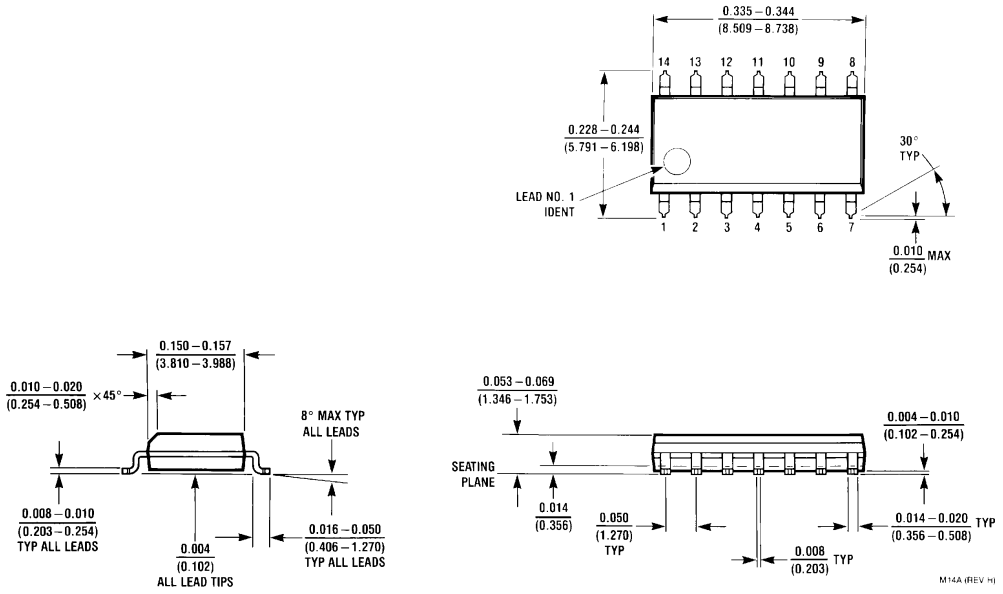

14-Lead Small Outline Molded Package (M)
Order Number DM74LS02M
Package Number M14A

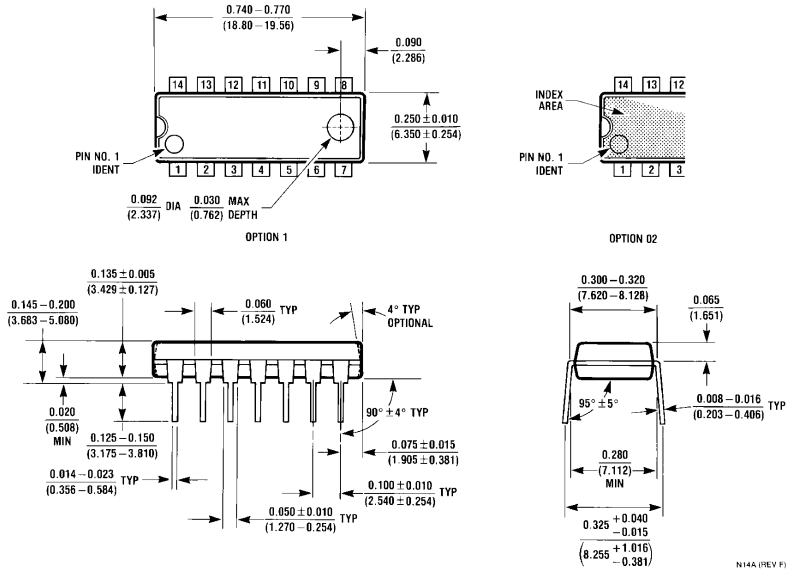

14-Lead Molded Dual-In-Line Package (N)
Order Number DM74LS02N
Package Number N14A

Physical Dimensions inches (millimeters) unless otherwise noted (Continued)

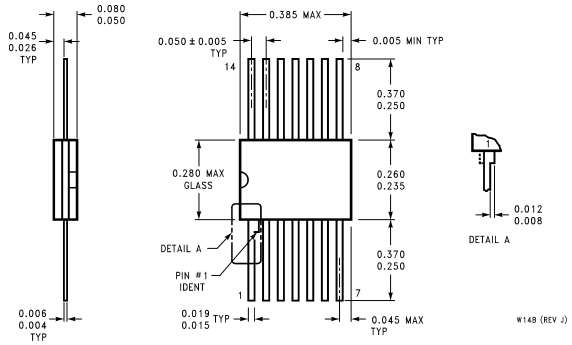

14-Lead Ceramic Flat Package (W)
Order Number 54LS02FMQB or DM54LS02W
Package Number W14B

LIFE SUPPORT POLICY

FAIRCHILD'S PRODUCTS ARE NOT AUTHORIZED FOR USE AS CRITICAL COMPONENTS IN LIFE SUPPORT DEVICES OR SYSTEMS WITHOUT THE EXPRESS WRITTEN APPROVAL OF THE PRESIDENT OF FAIRCHILD SEMICONDUCTOR CORPORATION. As used herein:

1. Life support devices or systems are devices or systems which, (a) are intended for surgical implant into the body, or (b) support or sustain life, and (c) whose failure to perform when properly used in accordance with instructions for use provided in the labeling, can be reasonably expected to result in a significant injury to the user.
2. A critical component in any component of a life support device or system whose failure to perform can be reasonably expected to cause the failure of the life support device or system, or to affect its safety or effectiveness.

Fairchild Semiconductor Corporation
Americas
Customer Response Center
Tel: 1-888-522-5372

Fairchild Semiconductor Europe
Fax: +49 (0) 1 80-530 85 86
Email: europe.support@nsc.com
Deutsch Tel: +49 (0) 8 141-35-0
English Tel: +44 (0) 1 793-85-68-56
Italy Tel: +39 (0) 2 57 5631

Fairchild Semiconductor Hong Kong Ltd.
13th Floor, Straight Block,
Ocean Centre, 5 Canton Rd.
Tsimshatsui, Kowloon
Hong Kong
Tel: +852 2737-7200
Fax: +852 2314-0061

National Semiconductor Japan Ltd.
Tel: 81-3-5620-6175
Fax: 81-3-5620-6179

www.fairchildsemi.com

Fairchild does not assume any responsibility for use of any circuitry described, no circuit patent licenses are implied and Fairchild reserves the right at any time without notice to change said circuitry and specifications.

ENTEGRECİ

Bu belge www.entegreci.com üzerinden sunulmaktadır.

Elektronik komponent tedarikinde Entegreci

Entegreci, Eskişehir merkezli, Türkiye geneline satış yapan bir elektronik komponent mağazasıdır. Entegreler (IC), mikrodenetleyiciler, transistörler, diyotlar, pasif elemanlar, konnektörler, modüller ve geliştirme kartları tek adetten seri üretim adetlerine kadar satılır. Ürün sayfalarında güncel stok durumunu, fiyatı ve datasheet bağlantısını bulabilirsiniz.

Parça koduyla arama

Üretici parça numarasını yazın; stok ve fiyatı hemen görün.

www.entegreci.com

Ürün kategorileri

Entegreden kapasitöre tüm elektronik komponent kategorileri.

Kategorilere göz atın

Üreticiler

Aradığınız üreticinin ürünlerini tek sayfada inceleyin.

Üreticileri görün

Toplu alım ve teklif

Listede olmayan ya da yüksek adetli parçalar için teklif isteyin.

Teklif isteyin

www.entegreci.com | **destek@entegreci.com** | **0850 305 90 34**

Entegreci is an online electronic components store based in Türkiye. Search by manufacturer part number to see stock, prices and datasheets for integrated circuits, microcontrollers, transistors, passive components and connectors, or request a quote for parts that are not listed.

Bu sayfa Entegreci tarafından eklenmiştir. Belgenin önceki sayfaları asıl yayıncısına aittir ve içeriği değiştirilmemiştir; en güncel sürüm için belgenin yayıncısına başvurun.