M74HCT573

OCTAL D-TYPE LATCH WITH 3 STATE OUTPUT NON INVERTING

- HIGH SPEED:
  t_{PD} = 21ns (TYP.) at V_{CC} = 4.5V
- LOW POWER DISSIPATION:
  I_{CC} = 4µA(MAX.) at T_A=25°C
- COMPATIBLE WITH TTL OUTPUTS :
  V_{IH} = 2V (MIN.) V_{IL} = 0.8V (MAX)
- BALANCED PROPAGATION DELAYS:
  $t_{PLH} \cong t_{PHL}$
- SYMMETRICAL OUTPUT IMPEDANCE:
  $|I_{OH}| = I_{OL}$ = 6mA (MIN)
- PIN AND FUNCTION COMPATIBLE WITH 74 SERIES 573

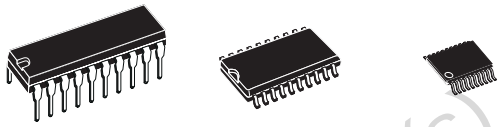

DIP SOP TSSOP

ORDER CODES

PACKAGE	TUBE	T & R
DIP	M74HCT573B1R	
SOP	M74HCT573M1R	M74HCT573RM13TR
TSSOP		M74HCT573TTR

DESCRIPTION

The M74HCT573 is an high speed CMOS OCTAL LATCH WITH 3-STATE OUTPUTS fabricated with silicon gate C^2MOS technology.
This 8-BIT D-Type latches is controlled by a latch enable input (LE) and output enable input ($\overline{OE}$).
While the LE input is held at a high level, the Q outputs will follow the data input precisely. When the LE is taken low, the Q outputs will be latched precisely at the logic level of D input data.
While the $\overline{OE}$ input is at low level, the eight outputs will be in a normal logic state (high or low logic level) and while $\overline{OE}$ is at high level the outputs will be in a high impedance state.

The 3-State output configuration and the wide choice of outline make bus organized system simple.
The M74HCT573 is designed to directly interface HSC^2MOS systems with TTL and NMOS components.
All inputs are equipped with protection circuits against static discharge and transient excess voltage.

Obsolete Product(s) - Obsolete Product(s)

PIN CONNECTION AND IEC LOGIC SYMBOLS

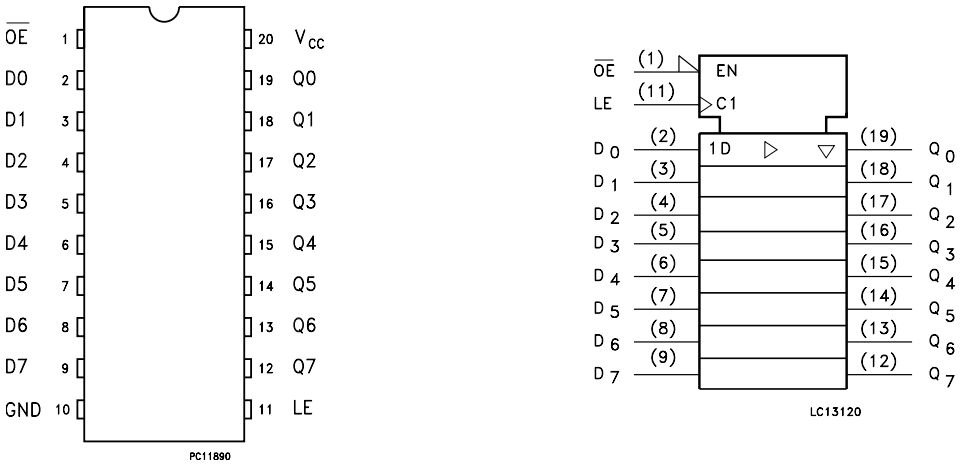

INPUT AND OUTPUT EQUIVALENT CIRCUIT

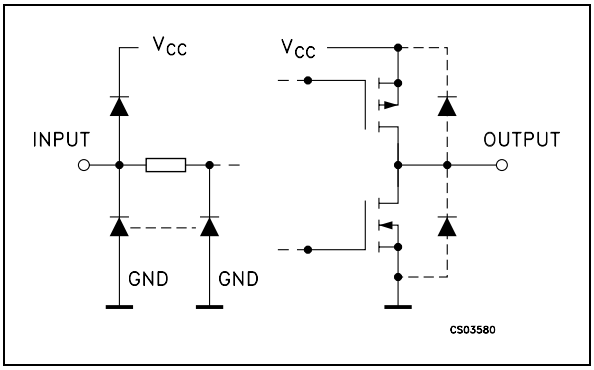

PIN DESCRIPTION

PIN No	SYMBOL	NAME AND FUNCTION
1	$\overline{OE}$	3 State Output Enable Input (Active LOW)
2, 3, 4, 5, 6, 7, 8, 9	D0 to D7	Data Inputs
12, 13, 14, 15, 16, 17, 18, 19	Q0 to Q7	3 State Latch Outputs
11	LE	Latch Enable Input
10	GND	Ground (0V)
20	V_{CC}	Positive Supply Voltage

TRUTH TABLE

INPUTS			OUTPUTS
$\overline{OE}$	LE	D	Q
H	X	X	Z
L	L	X	NO CHANGE (*)
L	H	L	L
L	H	H	H

X: Don't Care
Z: High Impedance
(*): Q Outputs are latched at the time when the LE input is taken low logic level.

LOGIC DIAGRAM

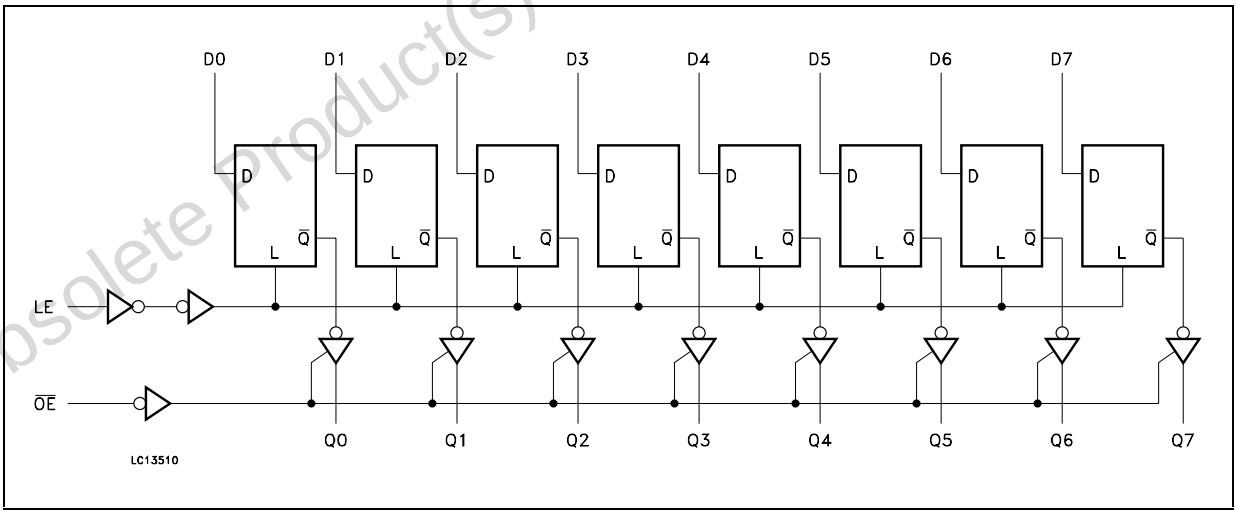

Obsolete Product(s) - Obsolete Product(s)

ABSOLUTE MAXIMUM RATINGS

Symbol	Parameter	Value	Unit
V_{CC}	Supply Voltage	-0.5 to +7	V
V_I	DC Input Voltage	-0.5 to V_{CC} + 0.5	V
V_O	DC Output Voltage	-0.5 to V_{CC} + 0.5	V
I_{IK}	DC Input Diode Current	± 20	mA
I_{OK}	DC Output Diode Current	± 20	mA
I_O	DC Output Current	± 35	mA
I_{CC} or I_{GND}	DC V_{CC} or Ground Current	± 70	mA
P_D	Power Dissipation	500(*)	mW
T_{stg}	Storage Temperature	-65 to +150	°C
T_L	Lead Temperature (10 sec)	300	°C

Absolute Maximum Ratings are those values beyond which damage to the device may occur. Functional operation under these conditions is not implied
(*) 500mW at 65 °C; derate to 300mW by 10mW/°C from 65°C to 85°C

RECOMMENDED OPERATING CONDITIONS

Symbol	Parameter	Value	Unit
V_{CC}	Supply Voltage	4.5 to 5.5	V
V_I	Input Voltage	0 to V_{CC}	V
V_O	Output Voltage	0 to V_{CC}	V
T_{op}	Operating Temperature	-55 to 125	°C
t_r, t_f	Input Rise and Fall Time (V_{CC} = 4.5 to 5.5V)	0 to 500	ns

Obsolete Product(s) - Obsolete Product(s)

DC SPECIFICATIONS

Symbol	Parameter	Test Condition		Value							Unit
		V_{CC} (V)		T_A = 25°C			-40 to 85°C		-55 to 125°C		
				Min.	Typ.	Max.	Min.	Max.	Min.	Max.	
V_{IH}	High Level Input Voltage	4.5 to 5.5		2.0			2.0		2.0		V
V_{IL}	Low Level Input Voltage	4.5 to 5.5				0.8		0.8		0.8	V
V_{OH}	High Level Output Voltage	4.5	I_O=-20 µA	4.4	4.5		4.4		4.4		V
			I_O=-6.0 mA	4.18	4.31		4.13		4.10		
V_{OL}	Low Level Output Voltage	4.5	I_O=20 µA		0.0	0.1		0.1		0.1	V
			I_O=6.0 mA		0.17	0.26		0.33		0.40	
I_I	Input Leakage Current	5.5	V_I = V_{CC} or GND			± 0.1		± 1		± 1	µA
I_{OZ}	High Impedance Output Leakage Current	5.5	V_I = V_{IH} or V_{IL} V_O = V_{CC} or GND			± 0.5		± 5		± 10	µA
I_{CC}	Quiescent Supply Current	5.5	V_I = V_{CC} or GND			4		40		80	µA
ΔI_{CC}	Additional Worst Case Supply Current	5.5	Per Input pin V_I = 0.5V or V_I = 2.4V Other Inputs at V_{CC} or GND			2.0		2.9		3.0	mA

AC ELECTRICAL CHARACTERISTICS (C_L = 50 pF, Input t_r = t_f = 6ns)

Symbol	Parameter	Test Condition			Value						Unit
		V_{CC} (V)	C_L (pF)		T_A = 25°C			-40 to 85°C		-55 to 125°C	
					Min.	Typ.	Max.	Min.	Max.	Min.	Max.	
t_{TLH} t_{THL}	Output Transition Time	4.5	50			7	12		15		18	ns
t_{PLH} t_{PHL}	Propagation Delay Time (LE - Q,$\overline{Q}$)	4.5	50			21	33		41		50	ns
		4.5	150			25	39		49		59	
t_{PLH} t_{PHL}	Propagation Delay Time (D - Q,$\overline{Q}$)	4.5	50			19	30		38		45	ns
		4.5	150			23	36		45		54	
t_{PZL} t_{PZH}	Output Enable Time	4.5	50	R_L = 1 KΩ		19	30		38		45	ns
		4.5	150			23	36		45		54	
t_{PLZ} t_{PHZ}	Output Disable Time	4.5	50	R_L = 1 KΩ		18	25		31		38	ns
$t_{W(L)}$ $t_{W(H)}$	Minimum Pulse Width (LE)	4.5	50			7	15		19		22	ns
t_s	Minimum Set-Up Time	4.5	50			4	10		13		15	ns
t_h	Minimum Hold Time	4.5	50				5		5		5	ns

Obsolete Product(s) - Obsolete Product(s)

CAPACITIVE CHARACTERISTICS

Symbol	Parameter	Test Condition		Value							Unit
		V_{CC} (V)		T_A = 25°C			-40 to 85°C		-55 to 125°C		
				Min.	Typ.	Max.	Min.	Max.	Min.	Max.	
C_{IN}	Input Capacitance				5	10		10		10	pF
C_{OUT}	Output Capacitance				10						pF
C_{PD}	Power Dissipation Capacitance (note 1)				51						pF

1) C_{PD} is defined as the value of the IC's internal equivalent capacitance which is calculated from the operating current consumption without load. (Refer to Test Circuit). Average operating current can be obtained by the following equation. $I_{CC(opr)} = C_{PD} \times V_{CC} \times f_{IN} + I_{CC}/8$ (per Flip Flop)

TEST CIRCUIT

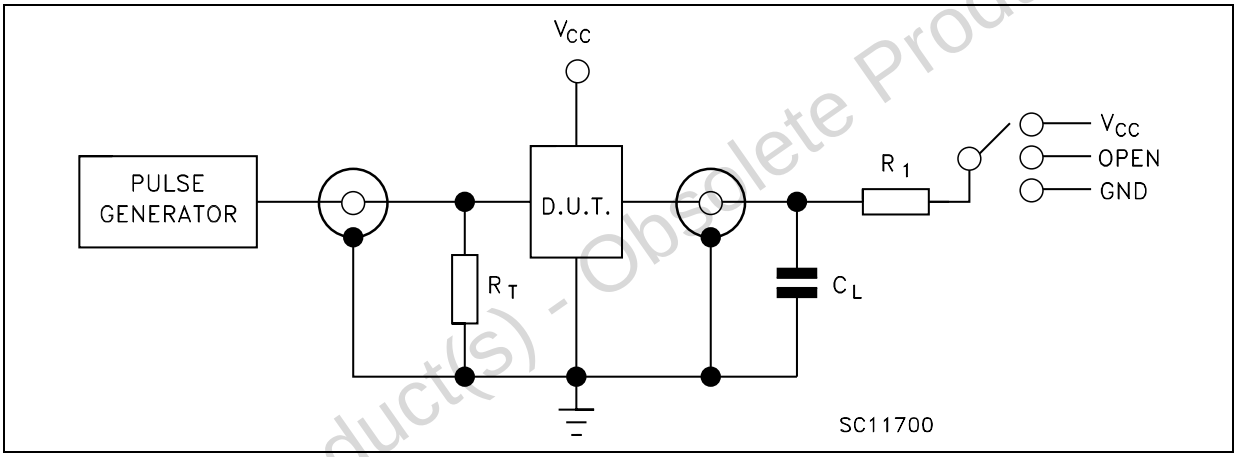

TEST	SWITCH
t_{PLH}, t_{PHL}	Open
t_{PZL}, t_{PLZ}	V_{CC}
t_{PZH}, t_{PHZ}	GND

C_L = 50pF/150pF or equivalent (includes jig and probe capacitance)
R_1 = 1KΩ or equivalent
R_T = Z_{OUT} of pulse generator (typically 50Ω)

Obsolete Product(s) - Obsolete Product(s)

WAVEFORM 1: LE TO Qn PROPAGATION DELAYS, LE MINIMUM PULSE WIDTH, Dn TO LE SETUP AND HOLD TIMES (f=1MHz; 50% duty cycle)

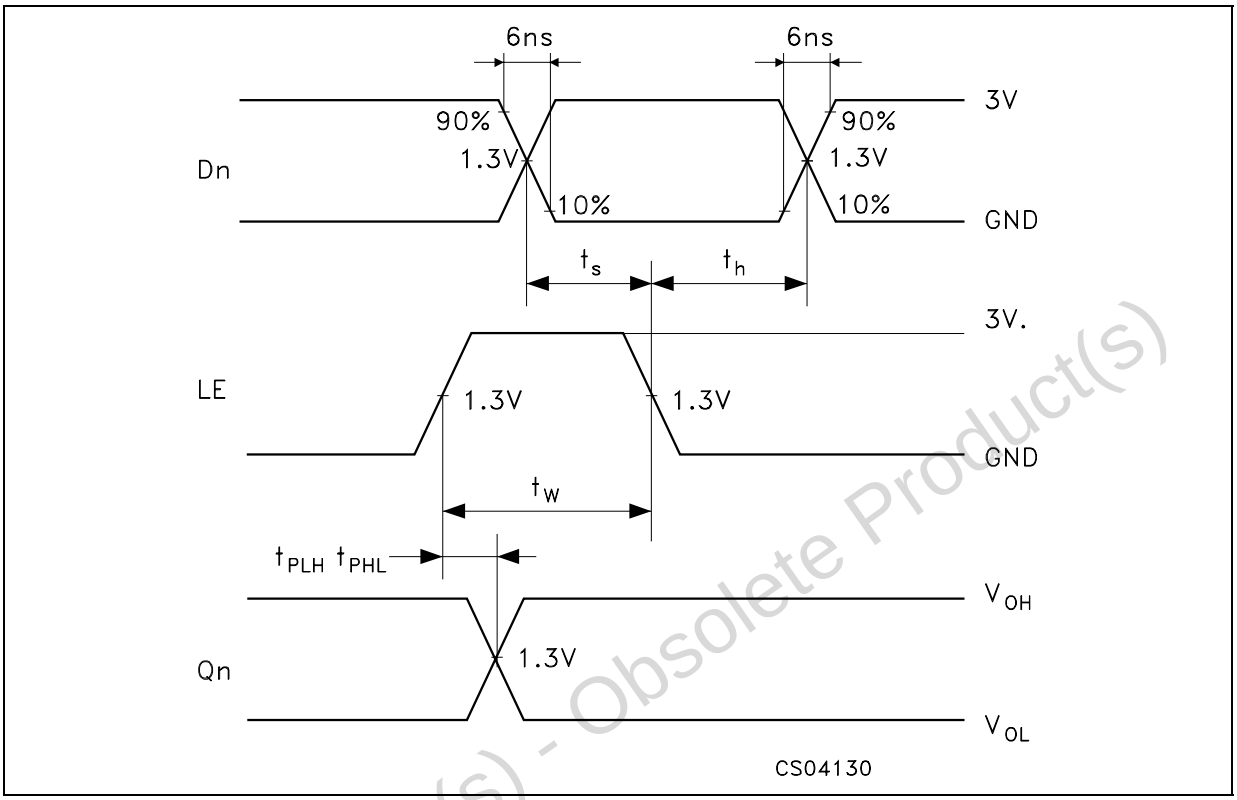

Obsolete Product(s) - Obsolete Product(s)

WAVEFORM 2: OUTPUT ENABLE AND DISABLE TIMES (f=1MHz; 50% duty cycle)

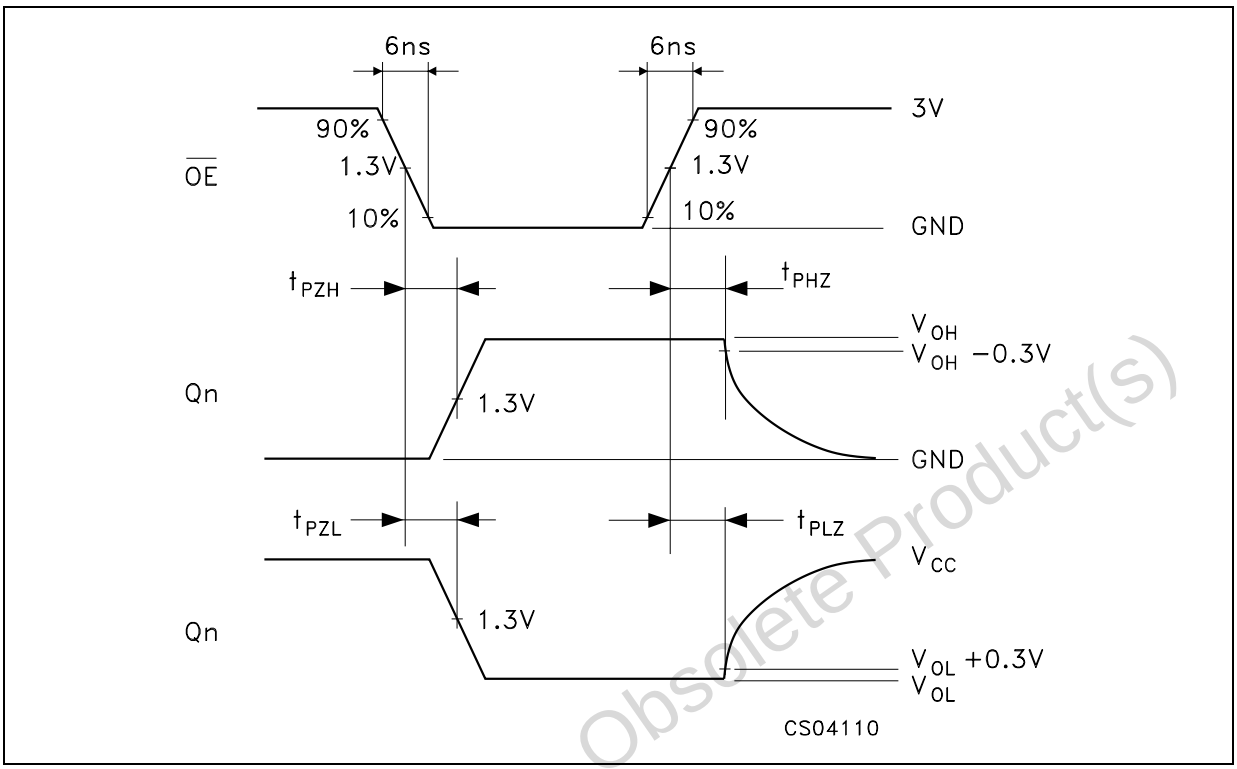

WAVEFORM 3: PROPAGATION DELAY TIMES (f=1MHz; 50% duty cycle)

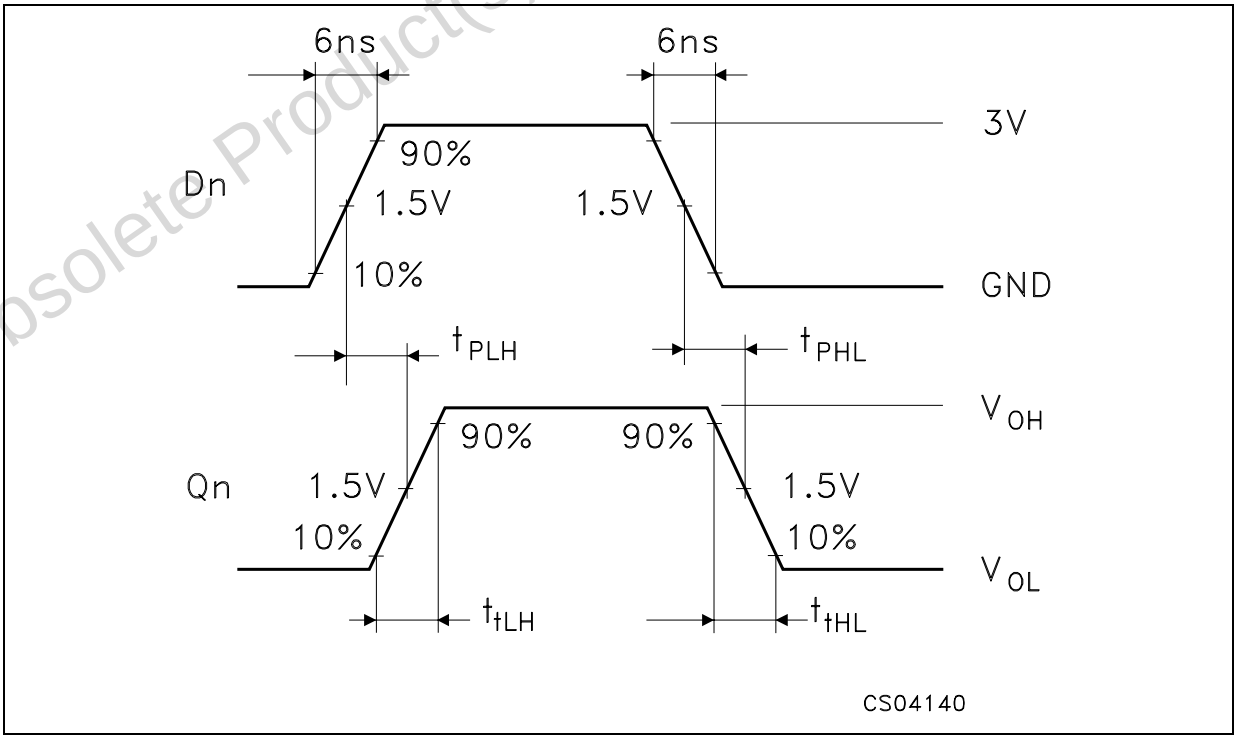

Obsolete Product(s) - Obsolete Product(s)

Plastic DIP-20 (0.25) MECHANICAL DATA

DIM.	mm.			inch		
	MIN.	TYP	MAX.	MIN.	TYP.	MAX.
a1	0.254			0.010		
B	1.39		1.65	0.055		0.065
b		0.45			0.018	
b1		0.25			0.010	
D			25.4			1.000
E		8.5			0.335	
e		2.54			0.100	
e3		22.86			0.900	
F			7.1			0.280
I			3.93			0.155
L		3.3			0.130	
Z			1.34			0.053

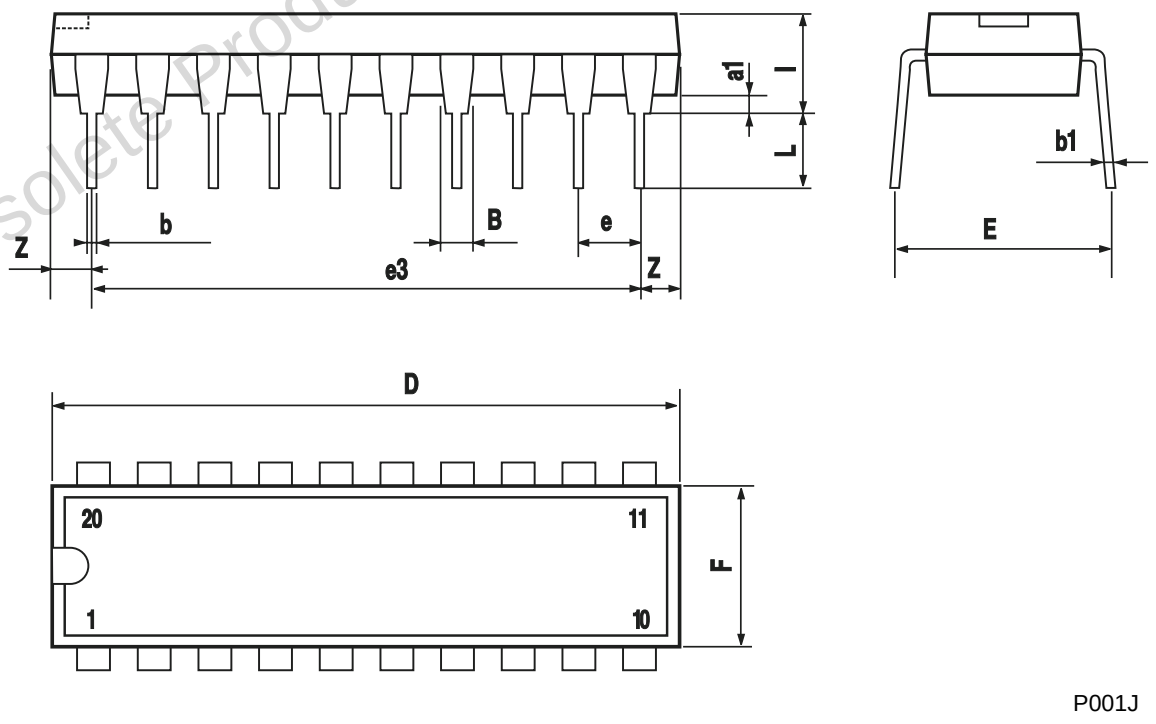

P001J

Obsolete Product(s) - Obsolete Product(s)

SO-20 MECHANICAL DATA

DIM.	mm.			inch		
	MIN.	TYP	MAX.	MIN.	TYP.	MAX.
A			2.65			0.104
a1	0.1		0.2	0.004		0.008
a2			2.45			0.096
b	0.35		0.49	0.014		0.019
b1	0.23		0.32	0.009		0.012
C		0.5			0.020	
c1	45° (typ.)					
D	12.60		13.00	0.496		0.512
E	10.00		10.65	0.393		0.419
e		1.27			0.050	
e3		11.43			0.450	
F	7.40		7.60	0.291		0.300
L	0.50		1.27	0.020		0.050
M			0.75			0.029
S	8° (max.)					

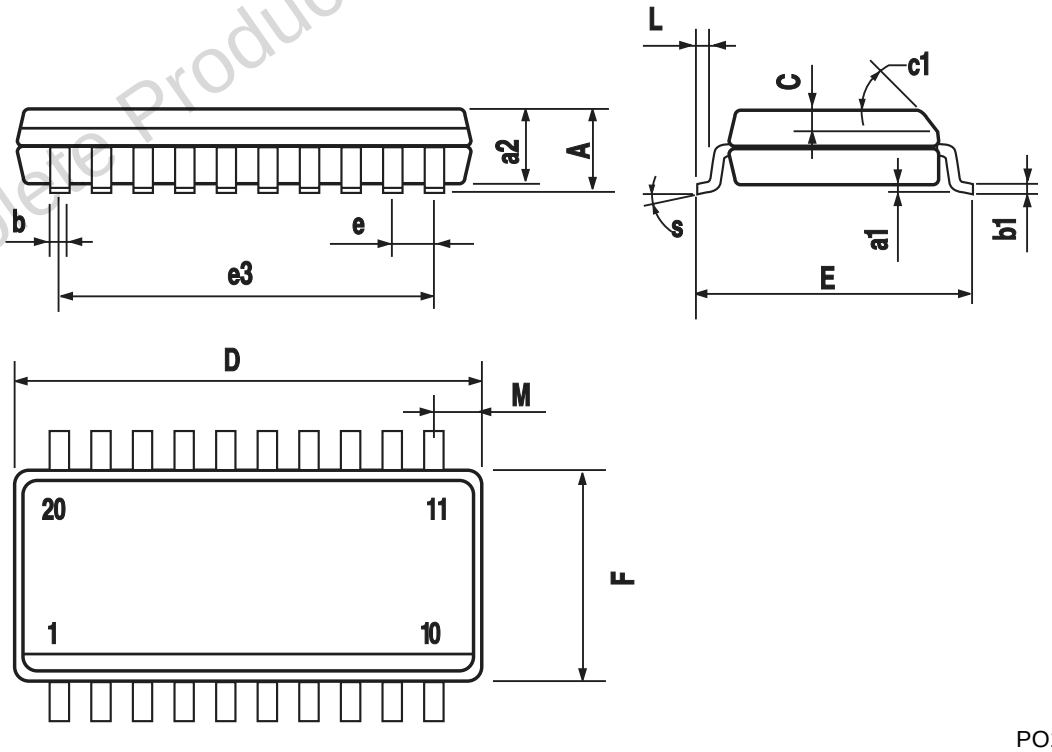

PO13L

Obsolete Product(s) - Obsolete Product(s)

TSSOP20 MECHANICAL DATA

DIM.	mm.			inch		
	MIN.	TYP	MAX.	MIN.	TYP.	MAX.
A			1.2			0.047
A1	0.05		0.15	0.002	0.004	0.006
A2	0.8	1	1.05	0.031	0.039	0.041
b	0.19		0.30	0.007		0.012
c	0.09		0.20	0.004		0.0089
D	6.4	6.5	6.6	0.252	0.256	0.260
E	6.2	6.4	6.6	0.244	0.252	0.260
E1	4.3	4.4	4.48	0.169	0.173	0.176
e		0.65 BSC			0.0256 BSC	
K	0°		8°	0°		8°
L	0.45	0.60	0.75	0.018	0.024	0.030

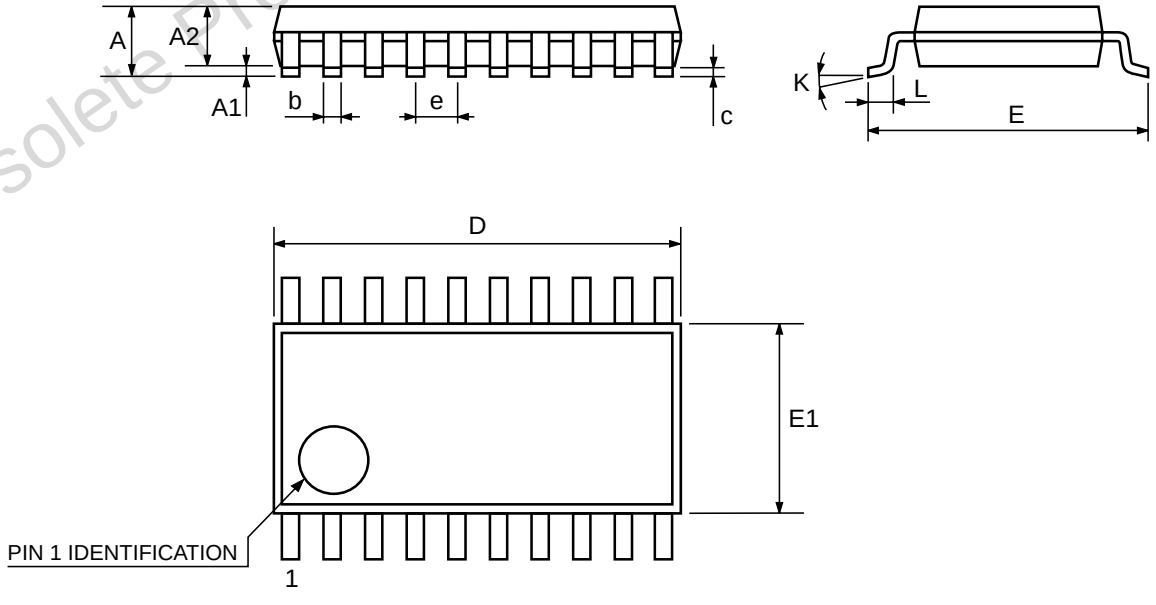

Obsolete Product(s) - Obsolete Product(s)

Obsolete Product(s) - Obsolete Product(s)

Information furnished is believed to be accurate and reliable. However, STMicroelectronics assumes no responsibility for the consequences of use of such information nor for any infringement of patents or other rights of third parties which may result from its use. No license is granted by implication or otherwise under any patent or patent rights of STMicroelectronics. Specifications mentioned in this publication are subject to change without notice. This publication supersedes and replaces all information previously supplied. STMicroelectronics products are not authorized for use as critical components in life support devices or systems without express written approval of STMicroelectronics.

© The ST logo is a registered trademark of STMicroelectronics

© 2000 STMicroelectronics - Printed in Italy - All Rights Reserved
STMicroelectronics GROUP OF COMPANIES
Australia - Brazil - China - Finland - France - Germany - Hong Kong - India - Italy - Japan - Malaysia - Malta - Morocco
Singapore - Spain - Sweden - Switzerland - United Kingdom
© http://www.st.com

ENTEGRECİ

Bu belge www.entegreci.com üzerinden sunulmaktadır.

Elektronik komponent tedarikinde Entegreci

Entegreci, Eskişehir merkezli, Türkiye geneline satış yapan bir elektronik komponent mağazasıdır. Entegreler (IC), mikrodenetleyiciler, transistörler, diyotlar, pasif elemanlar, konnektörler, modüller ve geliştirme kartları tek adetten seri üretim adetlerine kadar satılır. Ürün sayfalarında güncel stok durumunu, fiyatı ve datasheet bağlantısını bulabilirsiniz.

Parça koduyla arama

Üretici parça numarasını yazın; stok ve fiyatı hemen görün.

www.entegreci.com

Ürün kategorileri

Entegreden kapasitöre tüm elektronik komponent kategorileri.

Kategorilere göz atın

Üreticiler

Aradığınız üreticinin ürünlerini tek sayfada inceleyin.

Üreticileri görün

Toplu alım ve teklif

Listede olmayan ya da yüksek adetli parçalar için teklif isteyin.

Teklif isteyin

www.entegreci.com | **destek@entegreci.com** | **0850 305 90 34**

Entegreci is an online electronic components store based in Türkiye. Search by manufacturer part number to see stock, prices and datasheets for integrated circuits, microcontrollers, transistors, passive components and connectors, or request a quote for parts that are not listed.

Bu sayfa Entegreci tarafından eklenmiştir. Belgenin önceki sayfaları asıl yayıncısına aittir ve içeriği değiştirilmemiştir; en güncel sürüm için belgenin yayıncısına başvurun.