M74LS156P

DUAL 2-BIT BINARY TO 4-LINE DECODER/DEMULTIPLEXER WITH OPEN COLLECTOR OUTPUT

DESCRIPTION

The M74LS156P is a semiconductor integrated circuit containing two 2-bit binary to 4-line decoders/demultiplexers with open collector outputs

FEATURES

- Usable in AND Tie connection
- Enable inputs provided
- 8-bit output decoder/demultiplexer function is provided without the use of external components
- Wide operating temperature range (T_a=−20~+75°C)

APPLICATION

General purpose, for use in industrial and consumer equipment.

FUNCTIONAL DESCRIPTION

When a 2-bit binary number is decoded as a quaternary number and the 2-bit binary number is applied to inputs D_A and D_B, the corresponding $\overline{Y_0}$~$\overline{Y_3}$ output is set low and all the other 3 outputs are set high. In this case, enable inputs $1E_1$ and $2\overline{E_1}$ are kept high and low, respectively, and enable inputs $1\overline{E_2}$ and $2\overline{E_2}$ are kept low. When $1\overline{E_2}$ and $2\overline{E_2}$ are set high, all the outputs are set high. When decoding a 3-bit binary number in octal numbers, $1E_1$ and $2\overline{E_2}$ are connected and by applying the third bit binary number to them, the outputs appear in $2\overline{Y_0}$~$2\overline{Y_3}$ and $1\overline{Y_0}$~$1\overline{Y_3}$, in accordance with the function table.

PIN CONFIGURATION (TOP VIEW)

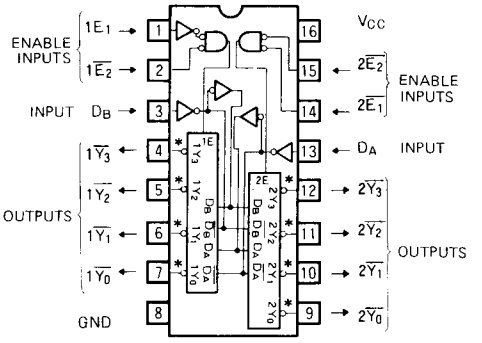

* OPEN COLLECTOR OUTPUT

Outline 16P4

For use as a 1-line to 4-line demultiplexer, the outputs appear in $\overline{Y_0}$~$\overline{Y_3}$ by making $1E_1$ and $2\overline{E_1}$ the data inputs and D_A and D_B the selection inputs. For use as a 1-line to 8-line demultiplexer, $1E_1$ and $1\overline{E_1}$ are connected to to be made the third bit selection input and $1\overline{E_2}$ and $2\overline{E_2}$ are connected to be made the data inputs so that the outputs appear in $2\overline{Y_0}$~$2\overline{Y_3}$ and $1\overline{Y_0}$~$1\overline{Y_3}$.

M74LS156P has the same functions and pin connections as M74LS155P but the latter is provided with active pull-up resistor outputs.

BLOCK DIAGRAM

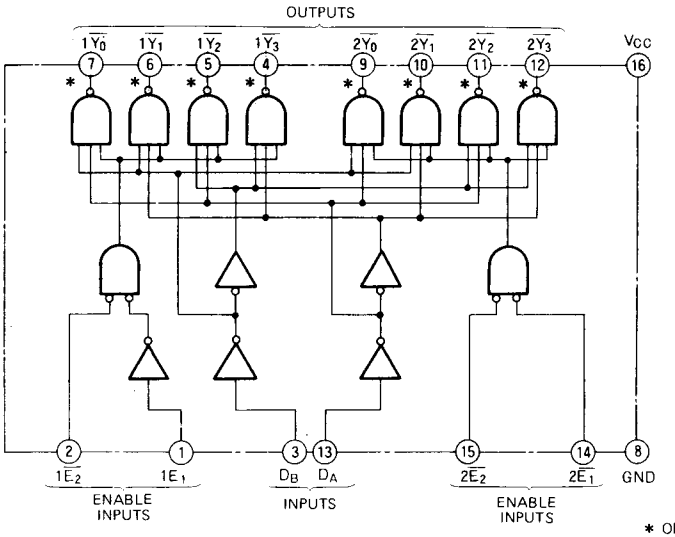

* OPEN COLLECTOR OUTPUT

DUAL 2-BIT BINARY TO 4-LINE DECODER/DEMULTIPLEXER WITH OPEN COLLECTOR OUTPUT

FUNCTION TABLE (Note 1)

(2-bit binary to 4-line decoder/1 line to 4-line demultiplexer)

D_B	D_A	$1\overline{E_2}$	$1E_1$	$1\overline{Y_0}$	$1\overline{Y_1}$	$1\overline{Y_2}$	$1\overline{Y_3}$
X	X	H	X	H	H	H	H
L	L	L	H	L	H	H	H
L	H	L	H	H	L	H	H
H	L	L	H	H	H	L	H
H	H	L	H	H	H	H	L
X	X	X	L	H	H	H	H

D_B	D_A	$2\overline{E_2}$	$2\overline{E_1}$	$2\overline{Y_0}$	$2\overline{Y_1}$	$2\overline{Y_2}$	$2\overline{Y_3}$
X	X	H	X	H	H	H	H
L	L	L	L	L	H	H	H
L	H	L	L	H	L	H	H
H	L	L	L	H	H	L	H
H	H	L	L	H	H	H	L
X	X	X	H	H	H	H	H

(3-bit binary to 8-line decoder/1 line to 8 line demultiplexer)

D_C	D_B	D_A	$\overline{E}$	$2\overline{Y_0}$	$2\overline{Y_1}$	$2\overline{Y_2}$	$2\overline{Y_3}$	$1\overline{Y_0}$	$1\overline{Y_1}$	$1\overline{Y_2}$	$1\overline{Y_3}$
X	X	X	H	H	H	H	H	H	H	H	H
L	L	L	L	L	H	H	H	H	H	H	H
L	L	H	L	H	L	H	H	H	H	H	H
L	H	L	L	H	H	L	H	H	H	H	H
L	H	H	L	H	H	H	L	H	H	H	H
H	L	L	L	H	H	H	H	L	H	H	H
H	L	H	L	H	H	H	H	H	L	H	H
H	H	L	L	H	H	H	H	H	H	L	H
H	H	H	L	H	H	H	H	H	H	H	L

Note 1 X : Irrelevant
D_C : Pin connecting $1E_1$ and $2\overline{E_1}$
$\overline{E}$: Pin connecting $1\overline{E_2}$ and $2\overline{E_2}$

ABSOLUTE MAXIMUM RATINGS (Ta = −20 ~ +75℃, unless otherwise noted)

Symbol	Parameter	Conditions	Limits	Unit
V_{CC}	Supply voltage		−0.5 ~ +7	V
V_I	Input voltage		−0.5 ~ +15	V
V_O	Output voltage	High-level state	−0.5 ~ V_{CC}	V
Topr	Operating free-air ambient temperature range		−20 ~ +75	℃
Tstg	Storage temperature range		−65 ~ +150	℃

RECOMMENDED OPERATING CONDITIONS (Ta = −20 ~ +75℃, unless otherwise noted)

Symbol	Parameter		Limits			Unit
			Min	Typ	Max	
V_{CC}	Supply voltage		4.75	5	5.25	V
I_{OH}	High-level output current	V_O=5.5V	0		100	μA
I_{OL}	Low-level output current	V_{OL}≦0.4V	0		4	mA
		V_{OL}≦0.5V	0		8	mA

ELECTRICAL CHARACTERISTICS (Ta = −20 ~ +75℃, unless otherwise noted)

Symbol	Parameter	Test conditions		Limits			Unit
				Min	Typ *	Max	
V_{IH}	High-level input voltage			2			V
V_{IL}	Low-level input voltage					0.8	V
V_{IC}	Input clamp voltage	V_{CC}=4.75V, I_{IC}=−18mA				−1.5	V
I_{OH}	High-level output current	V_{CC}=4.75V, V_I=0.8V V_I=2V, V_O=5.5V				100	μA
V_{OL}	Low-level output voltage	V_{CC}=4.75V	I_{OL}=4mA		0.25	0.4	V
		V_I=0.8V, V_I=2V	I_{OL}=8mA		0.35	0.5	V
I_{IH}	High-level input current	V_{CC}=5.25V, V_I=2.7V				20	μA
		V_{CC}=5.25V, V_I=10V				0.1	mA
I_{IL}	Low-level input current	V_{CC}=5.25V, V_I=0.4V				−0.4	mA
I_{CC}	Supply current	V_{CC}=5.25V (Note 2)			6.1	10	mA

* : All typical values are at V_{CC}= 5V, T_a= 25°C.
Note 2. I_{CC} is measured with inputs $1\overline{E_2}$, $2\overline{E_1}$ and $2\overline{E_2}$ at 0V and with D_A, D_B and $1E_1$ at 4.5V

DUAL 2-BIT BINARY TO 4-LINE DECODER/DEMULTIPLEXER WITH OPEN COLLECTOR OUTPUT

SWITCHING CHARACTERISTICS (V_{CC}=5V, Ta=25℃, unless otherwise noted)

Symbol	Parameter		Test conditions	Limits			Unit
				Min	Typ	Max	
t_{PLH}	Low-to-high-level, high-to-low-level output propagation time, from inputs D_A, D_B to outputs $\overline{Y_0}$~$\overline{Y_3}$	delay gate stages 2	R_L=2kΩ, C_L=15pF (Note 3)		18	40	ns
t_{PHL}					18	51	ns
t_{PLH}		delay gate stages 3			20	46	ns
t_{PHL}					18	51	ns
t_{PLH}	Low-to-high-level, high-to-low-level output propagation time, from inputs $1\overline{E_2}$, $2\overline{E_1}$, $2\overline{E_2}$ to outputs $\overline{Y_0}$~$\overline{Y_3}$				16	40	ns
t_{PHL}					20	51	ns
t_{PLH}	Low-to-high-level, high-to-low-level output propagation time, from input $1E_1$ to outputs $1\overline{Y_0}$ ~ $1\overline{Y_3}$				20	48	ns
t_{PHL}					25	48	ns

Note 3: Measurement circuit

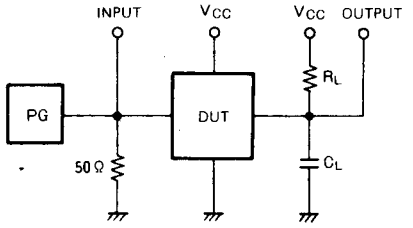

(1) The pulse generator (PG) has the following characteristics:
PRR=1MHz, t_r=6ns, t_f=6ns, t_w=500ns, V_P = $3V_{P-P}$, Z_O=50Ω.
(2) C_L includes probe and jig capacitance

TIMING DIAGRAM (Reference level = 1.3V)

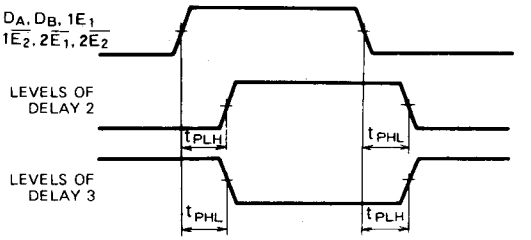

APPLICATION EXAMPLE

4-bit binary/hexadecimal decoder/demultiplexer

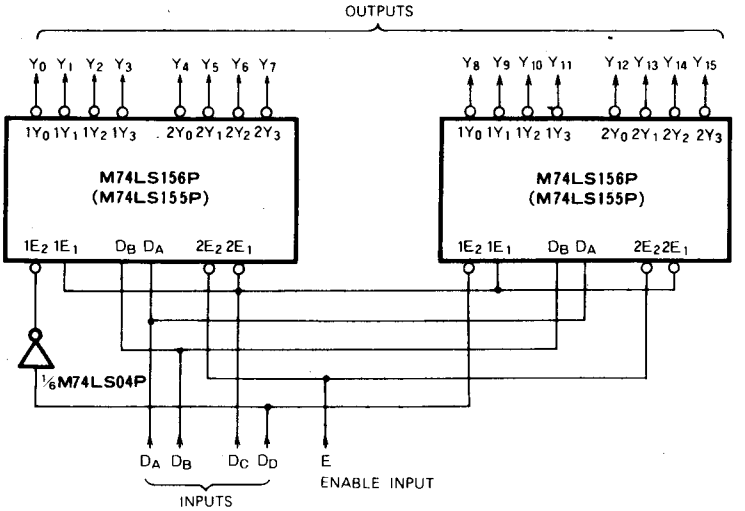

MITSUBISHI {DGTL LOGIC} 07E D 6249827 0013561 3

T-90-20

TYPE 14P4 14-PIN MOLDED PLASTIC DIL

Dimension in mm

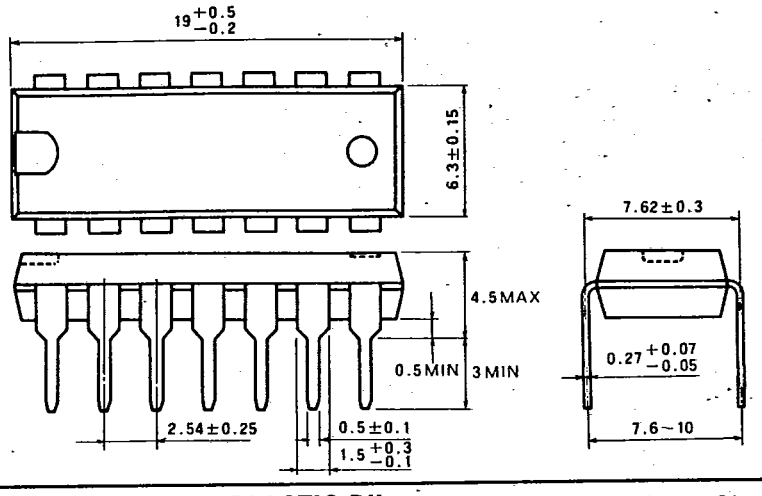

TYPE 16P4 16-PIN MOLDED PLASTIC DIL

Dimension in mm

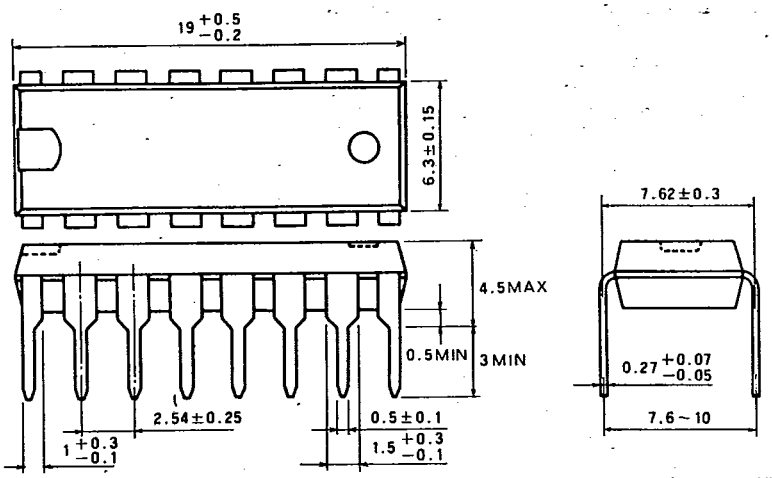

TYPE 20P4 20-PIN MOLDED PLASTIC DIL

Dimension in mm

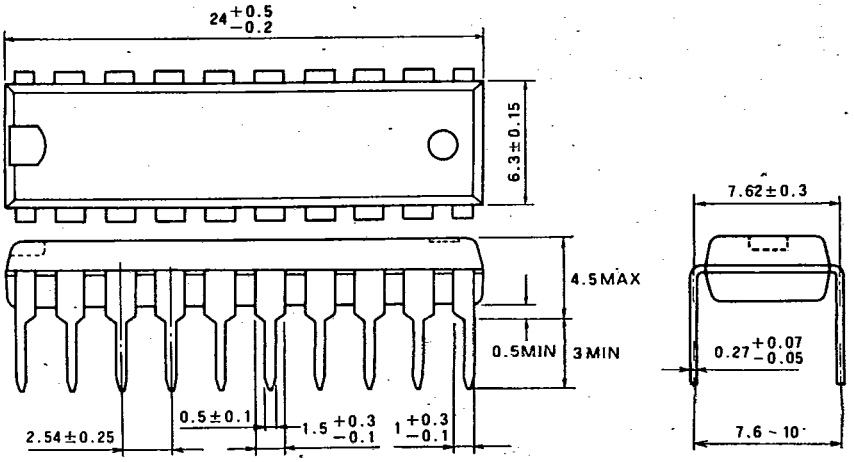

ENTEGRECİ

Bu belge www.entegreci.com üzerinden sunulmaktadır.

Elektronik komponent tedarikinde Entegreci

Entegreci, Eskişehir merkezli, Türkiye geneline satış yapan bir elektronik komponent mağazasıdır. Entegreler (IC), mikrodenetleyiciler, transistörler, diyotlar, pasif elemanlar, konnektörler, modüller ve geliştirme kartları tek adetten seri üretim adetlerine kadar satılır. Ürün sayfalarında güncel stok durumunu, fiyatı ve datasheet bağlantısını bulabilirsiniz.

Parça koduyla arama

Üretici parça numarasını yazın; stok ve fiyatı hemen görün.

www.entegreci.com

Ürün kategorileri

Entegreden kapasitöre tüm elektronik komponent kategorileri.

Kategorilere göz atın

Üreticiler

Aradığınız üreticinin ürünlerini tek sayfada inceleyin.

Üreticileri görün

Toplu alım ve teklif

Listede olmayan ya da yüksek adetli parçalar için teklif isteyin.

Teklif isteyin

www.entegreci.com | **destek@entegreci.com** | **0850 305 90 34**

Entegreci is an online electronic components store based in Türkiye. Search by manufacturer part number to see stock, prices and datasheets for integrated circuits, microcontrollers, transistors, passive components and connectors, or request a quote for parts that are not listed.

Bu sayfa Entegreci tarafından eklenmiştir. Belgenin önceki sayfaları asıl yayıncısına aittir ve içeriği değiştirilmemiştir; en güncel sürüm için belgenin yayıncısına başvurun.