National Semiconductor

June 1989

54LS138/DM54LS138/DM74LS138, 54LS139/DM54LS139/DM74LS139 Decoders/Demultiplexers

General Description

These Schottky-clamped circuits are designed to be used in high-performance memory-decoding or data-routing applications, requiring very short propagation delay times. In high-performance memory systems these decoders can be used to minimize the effects of system decoding. When used with high-speed memories, the delay times of these decoders are usually less than the typical access time of the memory. This means that the effective system delay introduced by the decoder is negligible.

The LS138 decodes one-of-eight lines, based upon the conditions at the three binary select inputs and the three enable inputs. Two active-low and one active-high enable inputs reduce the need for external gates or inverters when expanding. A 24-line decoder can be implemented with no external inverters, and a 32-line decoder requires only one inverter. An enable input can be used as a data input for demultiplexing applications.

The LS139 comprises two separate two-line-to-four-line decoders in a single package. The active-low enable input can be used as a data line in demultiplexing applications.

All of these decoders/demultiplexers feature fully buffered inputs, presenting only one normalized load to its driving circuit. All inputs are clamped with high-performance Schottky diodes to suppress line-ringing and simplify system design.

Features

- Designed specifically for high speed:
  - Memory decoders
  - Data transmission systems
- LS138 3-to-8-line decoders incorporates 3 enable inputs to simplify cascading and/or data reception
- LS139 contains two fully independent 2-to-4-line decoders/demultiplexers
- Schottky clamped for high performance
- Typical propagation delay (3 levels of logic)
  - LS138 21 ns
  - LS139 21 ns
- Typical power dissipation
  - LS138 32 mW
  - LS139 34 mW
- Alternate Military/Aerospace devices (54LS138, 54LS139) are available. Contact a National Semiconductor Sales Office/Distributor for specifications.

Connection Diagrams

Dual-in-Line Package

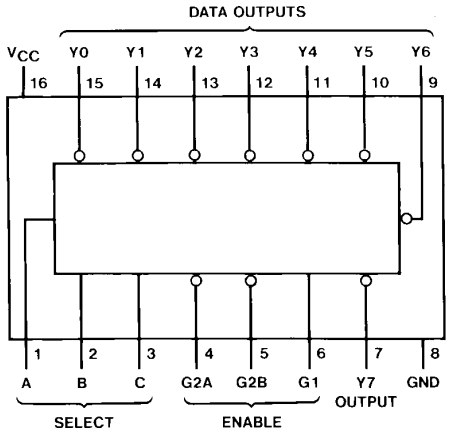

TL/F/6391–1

Order Number 54LS138DMQB, 54LS138FMQB, 54LS138LMQB, DM54LS138J, DM54LS138W, DM74LS138M or DM74LS138N
See NS Package Number E20A, J16A, M16A, N16E or W16A

Dual-in-Line Package

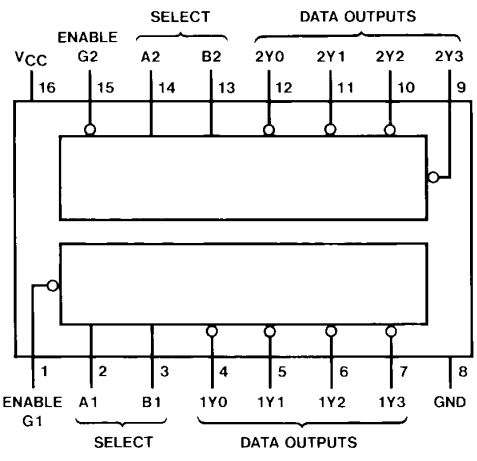

TL/F/6391–2

Order Number 54LS139DMQB, 54LS139FMQB, 54LS139LMQB, DM54LS139J, DM54LS139W, DM74LS139M or DM74LS139N
See NS Package Number E20A, J16A, M16A, N16E or W16A

©1995 National Semiconductor Corporation

RRD-B30M105/Printed in U. S. A.

Absolute Maximum Ratings (Note)

If Military/Aerospace specified devices are required, please contact the National Semiconductor Sales Office/Distributors for availability and specifications.

Supply Voltage	7V
Input Voltage	7V
Operating Free Air Temperature Range	
DM54LS and 54LS	−55°C to +125°C
DM74LS	0°C to +70°C
Storage Temperature Range	−65°C to +150°C

Note: *The "Absolute Maximum Ratings" are those values beyond which the safety of the device cannot be guaranteed. The device should not be operated at these limits. The parametric values defined in the "Electrical Characteristics" table are not guaranteed at the absolute maximum ratings. The "Recommended Operating Conditions" table will define the conditions for actual device operation.*

Recommended Operating Conditions

Symbol	Parameter	DM54LS138			DM74LS138			Units
		Min	Nom	Max	Min	Nom	Max	
V_{CC}	Supply Voltage	4.5	5	5.5	4.75	5	5.25	V
V_{IH}	High Level Input Voltage	2			2			V
V_{IL}	Low Level Input Voltage			0.7			0.8	V
I_{OH}	High Level Output Current			−0.4			−0.4	mA
I_{OL}	Low Level Output Current			4			8	mA
T_A	Free Air Operating Temperature	−55		125	0		70	°C

'LS138 Electrical Characteristics

over recommended operating free air temperature range (unless otherwise noted)

Symbol	Parameter	Conditions		Min	Typ (Note 1)	Max	Units
V_I	Input Clamp Voltage	V_{CC} = Min, I_I = −18 mA				−1.5	V
V_{OH}	High Level Output Voltage	V_{CC} = Min, I_{OH} = Max, V_{IL} = Max, V_{IH} = Min	DM54	2.5	3.4		V
			DM74	2.7	3.4		
V_{OL}	Low Level Output Voltage	V_{CC} = Min, I_{OL} = Max, V_{IL} = Max, V_{IH} = Min	DM54		0.25	0.4	V
			DM74		0.35	0.5	
		I_{OL} = 4 mA, V_{CC} = Min	DM74		0.25	0.4	
I_I	Input Current @ Max Input Voltage	V_{CC} = Max, V_I = 7V				0.1	mA
I_{IH}	High Level Input Current	V_{CC} = Max, V_I = 2.7V				20	μA
I_{IL}	Low Level Input Current	V_{CC} = Max, V_I = 0.4V				−0.36	mA
I_{OS}	Short Circuit Output Current	V_{CC} = Max (Note 2)	DM54	−20		−100	mA
			DM74	−20		−100	
I_{CC}	Supply Current	V_{CC} = Max (Note 3)			6.3	10	mA

Note 1: All typicals are at V_{CC} = 5V, T_A = 25°C.

Note 2: Not more than one output should be shorted at a time, and the duration should not exceed one second.

Note 3: I_{CC} is measured with all outputs enabled and open.

'LS138 Switching Characteristics

at V_{CC} = 5V and T_A = 25°C (See Section 1 for Test Waveforms and Output Load)

Symbol	Parameter	From (Input) To (Output)	Levels of Delay	R_L = 2 kΩ				Units
				C_L = 15 pF		C_L = 50 pF		
				Min	Max	Min	Max	
t_{PLH}	Propagation Delay Time Low to High Level Output	Select to Output	2		18		27	ns
t_{PHL}	Propagation Delay Time High to Low Level Output	Select to Output	2		27		40	ns
t_{PLH}	Propagation Delay Time Low to High Level Output	Select to Output	3		18		27	ns
t_{PHL}	Propagation Delay Time High to Low Level Output	Select to Output	3		27		40	ns
t_{PLH}	Propagation Delay Time Low to High Level Output	Enable to Output	2		18		27	ns
t_{PHL}	Propagation Delay Time High to Low Level Output	Enable to Output	2		24		40	ns
t_{PLH}	Propagation Delay Time Low to High Level Output	Enable to Output	3		18		27	ns
t_{PHL}	Propagation Delay Time High to Low Level Output	Enable to Output	3		28		40	ns

Recommended Operating Conditions

Symbol	Parameter	DM54LS139			DM74LS139			Units
		Min	Nom	Max	Min	Nom	Max	
V_{CC}	Supply Voltage	4.5	5	5.5	4.75	5	5.25	V
V_{IH}	High Level Input Voltage	2			2			V
V_{IL}	Low Level Input Voltage			0.7			0.8	V
I_{OH}	High Level Output Current			−0.4			−0.4	mA
I_{OL}	Low Level Output Current			4			8	mA
T_A	Free Air Operating Temperature	−55		125	0		70	°C

’LS139 Electrical Characteristics

over recommended operating free air temperature range (unless otherwise noted)

Symbol	Parameter	Conditions		Min	Typ (Note 1)	Max	Units
V_I	Input Clamp Voltage	V_{CC} = Min, I_I = −18 mA				−1.5	V
V_{OH}	High Level Output Voltage	V_{CC} = Min, I_{OH} = Max, V_{IL} = Max, V_{IH} = Min	DM54	2.5	3.4		V
			DM74	2.7	3.4		
V_{OL}	Low Level Output Voltage	V_{CC} = Min, I_{OL} = Max V_{IL} = Max, V_{IH} = Min	DM54		0.25	0.4	V
			DM74		0.35	0.5	
		I_{OL} = 4 mA, V_{CC} = Min	DM74		0.25	0.4	
I_I	Input Current @ Max Input Voltage	V_{CC} = Max, V_I = 7V				0.1	mA
I_{IH}	High Level Input Current	V_{CC} = Max, V_I = 2.7V				20	μA
I_{IL}	Low Level Input Current	V_{CC} = Max, V_I = 0.4V				−0.36	mA
I_{OS}	Short Circuit Output Current	V_{CC} = Max (Note 2)	DM54	−20		−100	mA
			DM74	−20		−100	
I_{CC}	Supply Current	V_{CC} = Max (Note 3)			6.8	11	mA

Note 1: All typicals are at V_{CC} = 5V, T_A = 25°C.

Note 2: Not more than one output should be shorted at a time, and the duration should not exceed one second.

Note 3: I_{CC} is measured with all outputs enabled and open.

’LS139 Switching Characteristics

at V_{CC} = 5V and T_A = 25°C (See Section 1 for Test Waveforms and Output Load)

Symbol	Parameter	From (Input) To (Output)	R_L = 2 kΩ				Units
			C_L = 15 pF		C_L = 50 pF		
			Min	Max	Min	Max	
t_{PLH}	Propagation Delay Time Low to High Level Output	Select to Output		18		27	ns
t_{PHL}	Propagation Delay Time High to Low Level Output	Select to Output		27		40	ns
t_{PLH}	Propagation Delay Time Low to High Level Output	Enable to Output		18		27	ns
t_{PHL}	Propagation Delay Time High to Low Level Output	Enable to Output		24		40	ns

Function Tables

LS138

Inputs					Outputs							
Enable		Select										
G1	G2*	C	B	A	YO	Y1	Y2	Y3	Y4	Y5	Y6	Y7
X	H	X	X	X	H	H	H	H	H	H	H	H
L	X	X	X	X	H	H	H	H	H	H	H	H
H	L	L	L	L	L	H	H	H	H	H	H	H
H	L	L	L	H	H	L	H	H	H	H	H	H
H	L	L	H	L	H	H	L	H	H	H	H	H
H	L	L	H	H	H	H	H	L	H	H	H	H
H	L	H	L	L	H	H	H	H	L	H	H	H
H	L	H	L	H	H	H	H	H	H	L	H	H
H	L	H	H	L	H	H	H	H	H	H	L	H
H	L	H	H	H	H	H	H	H	H	H	H	L

* G2 = G2A + G2B

H = High Level, L = Low Level, X = Don’t Care

LS139

Inputs			Outputs			
Enable	Select					
G	B	A	Y0	Y1	Y2	Y3
H	X	X	H	H	H	H
L	L	L	L	H	H	H
L	L	H	H	L	H	H
L	H	L	H	H	L	H
L	H	H	H	H	H	L

H = High Level, L = Low Level, X = Don’t Care

Logic Diagrams

LS138

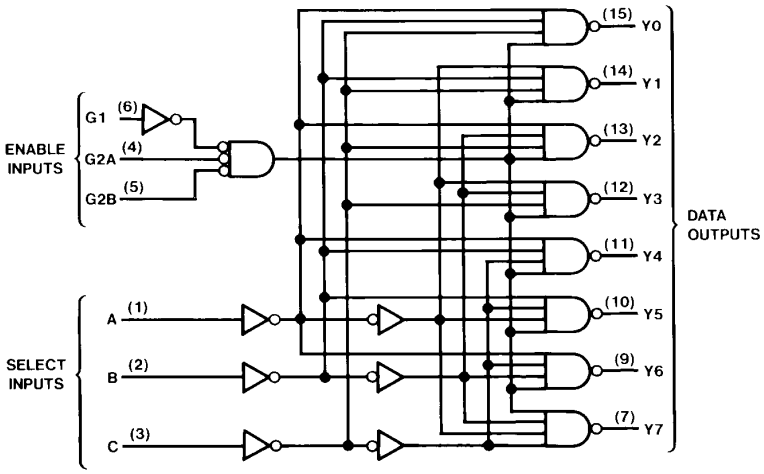

TL/F/6391–3

LS139

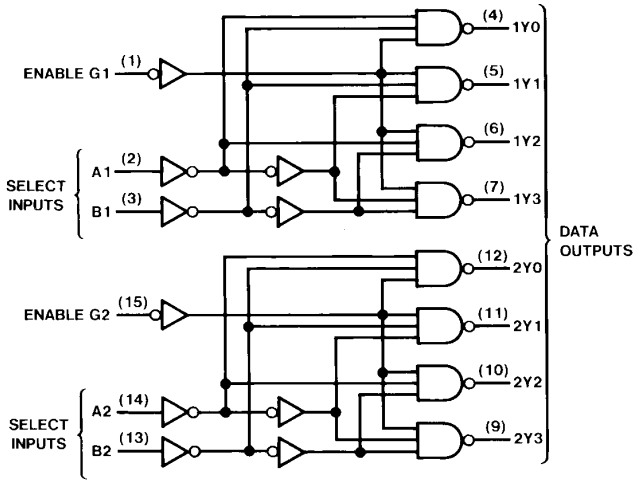

TL/F/6391–4

Physical Dimensions inches (millimeters)

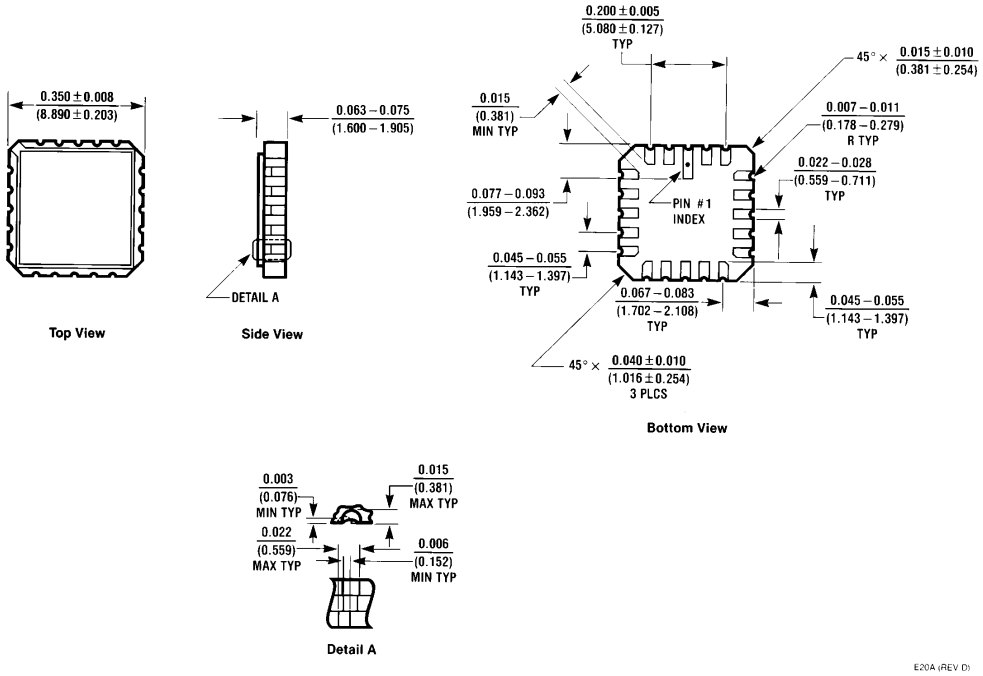

Ceramic Leadless Chip Carrier Package (E)
Order Number 54LS138LMQB or 54LS139LMQB
NS Package Number E20A

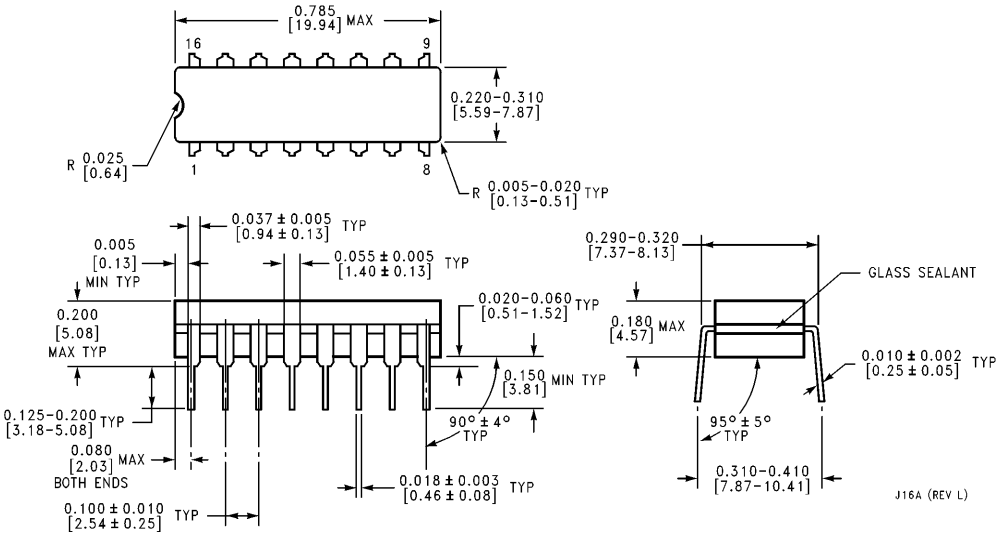

16-Lead Ceramic Dual-In-Line Package (J)
Order Number 54LS138DMQB, 54LS139DMQB, DM54LS138J or DM54LS139J
NS Package Number J16A

Physical Dimensions inches (millimeters) (Continued)

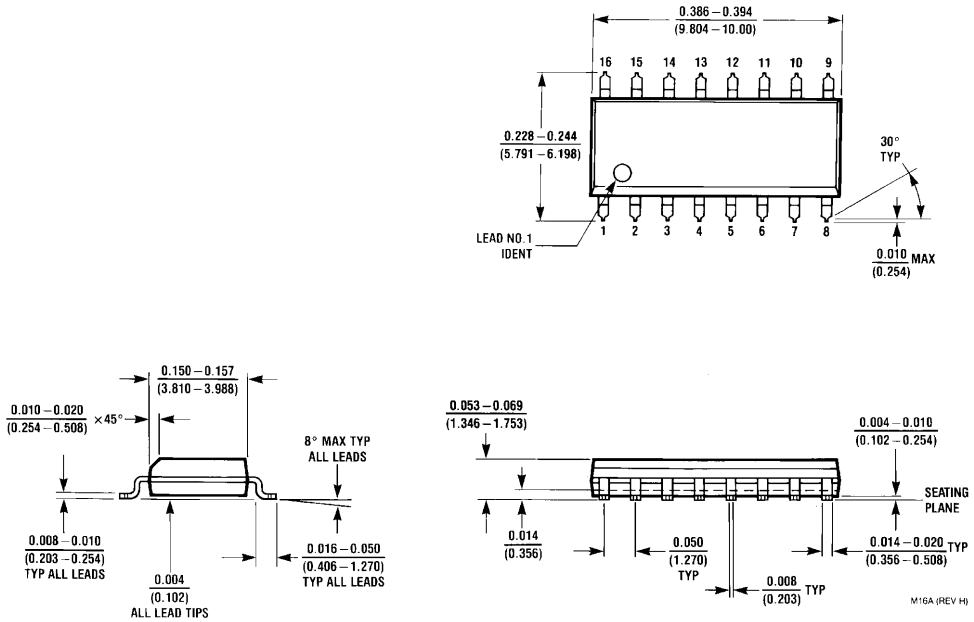

16-Lead Small Outline Molded Package (M)
Order Number DM74LS138M or DM74LS139M
NS Packge Number M16A

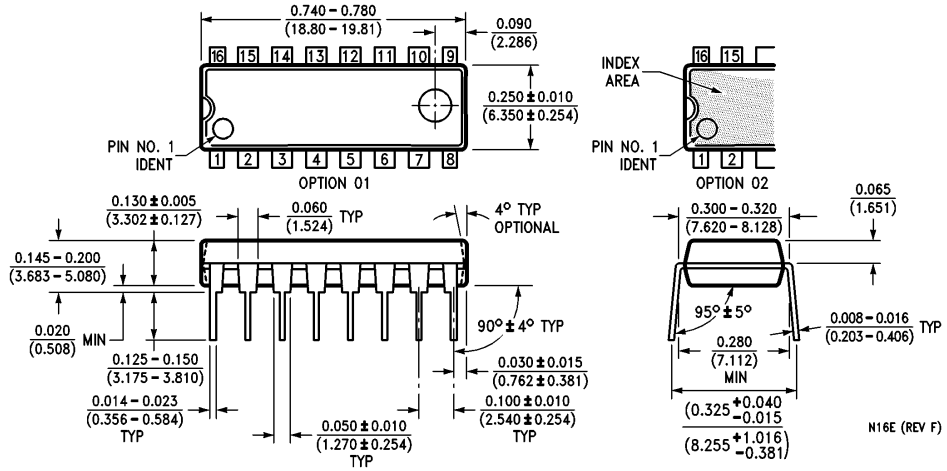

16-Lead Molded Dual-In-Line Package (N)
Order Number DM74LS138N or DM74LS139N
NS Package Number N16E

Physical Dimensions inches (millimeters) (Continued)

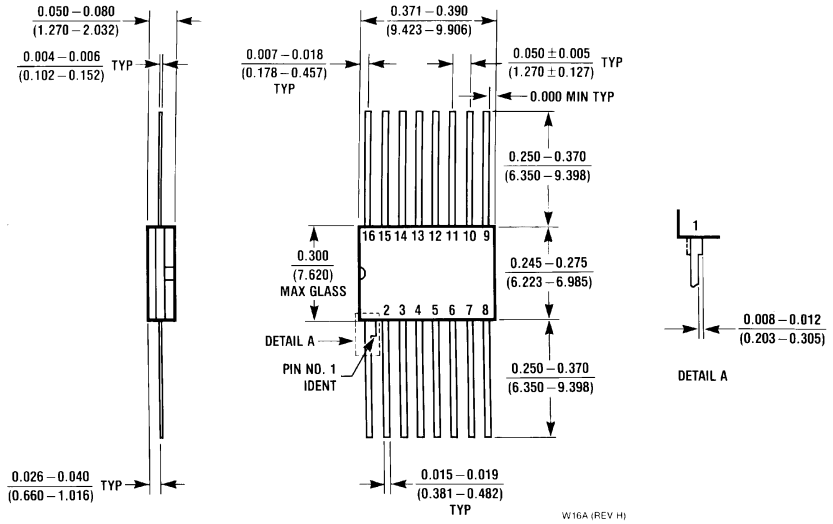

16-Lead Ceramic Flat Package (W)
Order Number 54LS138FMQB, 54LS139FMQB, DM54LS138W or DM54LS139W
NS Package Number W16A

LIFE SUPPORT POLICY

NATIONAL'S PRODUCTS ARE NOT AUTHORIZED FOR USE AS CRITICAL COMPONENTS IN LIFE SUPPORT DEVICES OR SYSTEMS WITHOUT THE EXPRESS WRITTEN APPROVAL OF THE PRESIDENT OF NATIONAL SEMICONDUCTOR CORPORATION. As used herein:

1. Life support devices or systems are devices or systems which, (a) are intended for surgical implant into the body, or (b) support or sustain life, and whose failure to perform, when properly used in accordance with instructions for use provided in the labeling, can be reasonably expected to result in a significant injury to the user.
2. A critical component is any component of a life support device or system whose failure to perform can be reasonably expected to cause the failure of the life support device or system, or to affect its safety or effectiveness.

National Semiconductor Corporation
1111 West Bardin Road
Arlington, TX 76017
Tel: 1(800) 272-9959
Fax: 1(800) 737-7018

National Semiconductor Europe
Fax: (+49) 0-180-530 85 86
Email: cnjwge@tevm2.nsc.com
Deutsch Tel: (+49) 0-180-530 85 85
English Tel: (+49) 0-180-532 78 32
Français Tel: (+49) 0-180-532 93 58
Italiano Tel: (+49) 0-180-534 16 80

National Semiconductor Hong Kong Ltd.
13th Floor, Straight Block,
Ocean Centre, 5 Canton Rd.
Tsimshatsui, Kowloon
Hong Kong
Tel: (852) 2737-1600
Fax: (852) 2736-9960

National Semiconductor Japan Ltd.
Tel: 81-043-299-2309
Fax: 81-043-299-2408

National does not assume any responsibility for use of any circuitry described, no circuit patent licenses are implied and National reserves the right at any time without notice to change said circuitry and specifications.

This datasheet has been download from:

www.datasheetcatalog.com

Datasheets for electronics components.

National Semiconductor was acquired by Texas Instruments.

http://www.ti.com/corp/docs/investor_relations/pr_09_23_2011_national_semiconductor.html

This file is the datasheet for the following electronic components:

DM74LS138 - http://www.ti.com/product/dm74ls138?HQS=TI-null-null-dscatalog-df-pf-null-wwe

54LS138 - http://www.ti.com/product/54ls138?HQS=TI-null-null-dscatalog-df-pf-null-wwe

DM74LS139 - http://www.ti.com/product/dm74ls139?HQS=TI-null-null-dscatalog-df-pf-null-wwe

54LS139 - http://www.ti.com/product/54ls139?HQS=TI-null-null-dscatalog-df-pf-null-wwe

DM54LS138 - http://www.ti.com/product/dm54ls138?HQS=TI-null-null-dscatalog-df-pf-null-wwe

DM54LS139 - http://www.ti.com/product/dm54ls139?HQS=TI-null-null-dscatalog-df-pf-null-wwe

ENTEGRECİ

Bu belge www.entegreci.com üzerinden sunulmaktadır.

Elektronik komponent tedarikinde Entegreci

Entegreci, Eskişehir merkezli, Türkiye geneline satış yapan bir elektronik komponent mağazasıdır. Entegreler (IC), mikrodenetleyiciler, transistörler, diyotlar, pasif elemanlar, konnektörler, modüller ve geliştirme kartları tek adetten seri üretim adetlerine kadar satılır. Ürün sayfalarında güncel stok durumunu, fiyatı ve datasheet bağlantısını bulabilirsiniz.

Parça koduyla arama

Üretici parça numarasını yazın; stok ve fiyatı hemen görün.

www.entegreci.com

Ürün kategorileri

Entegreden kapasitöre tüm elektronik komponent kategorileri.

Kategorilere göz atın

Üreticiler

Aradığınız üreticinin ürünlerini tek sayfada inceleyin.

Üreticileri görün

Toplu alım ve teklif

Listede olmayan ya da yüksek adetli parçalar için teklif isteyin.

Teklif isteyin

www.entegreci.com | **destek@entegreci.com** | **0850 305 90 34**

Entegreci is an online electronic components store based in Türkiye. Search by manufacturer part number to see stock, prices and datasheets for integrated circuits, microcontrollers, transistors, passive components and connectors, or request a quote for parts that are not listed.

Bu sayfa Entegreci tarafından eklenmiştir. Belgenin önceki sayfaları asıl yayıncısına aittir ve içeriği değiştirilmemiştir; en güncel sürüm için belgenin yayıncısına başvurun.