RFM69C ISM TRANSCEIVER MODULE V1.1

GENERAL DESCRIPTION

The RFM69C is a transceiver module capable of operation over a wide frequency range, including the 315,433, 868 and 915MHz license-free ISM (Industry Scientific and Medical) frequency bands. All major RF communication parameters are programmable and most of them can be dynamically set. The RFM69C offers the unique advantage of programmable narrow-band and wide- band communication modes The RFM69C is optimized for low power consumption while offering high RF output power and channelized operation. Compliance ETSI and FCC regulations.

In order to better use RFM69C modules, this specification also involves a large number of the parameters and functions of its core chip RF69's,including those IC pins which are not leaded out. All of these can help customers gain a better understanding of the performance of RFM69C modules, and enhance the application skills.



RFM69C

APPLICATIONS

- Automated Meter reading
- Wireless Sensor Networks
- Home and Building Automation
- Wireless Alarm and Security Systems
- Industrial Monitoring and Control
- Wireless M-BUS

KEY PRODUCT FEATURES

- +13 dBm Power Output Capability
- High Sensitivity: down to -120 dBm at 1.2 kbps
- High Selectivity: 16-tap FIR Channel Filter
- Bullet-proof front end: IIP3 = -18 dBm, IIP2 = +35 dBm,80 dB Blocking Immunity, no Image Frequency response
- Low current: Rx = 16 mA, 100nA register retention
- Programmable Pout: -18 to +13 dBm in 1dB steps
- Constant RF performance over voltage range of module
- FSK Bit rates up to 300 kb/s
- Fully integrated synthesizer with a resolution of 61 Hz
- FSK, GFSK, MSK, GMSK and OOK modulations
- Built-in Bit Synchronizer performing Clock Recovery
- Incoming Sync Word Recognition
- 115 dB+ Dynamic Range RSSI
- Automatic RF Sense with ultra-fast AFC
- Packet engine with CRC-16, AES-128, 66-byte FIFO
- Built-in temperature sensor
- Module Size:16X16mm

Tel: +86-755-82973805 Fax: +86-755-82973550 E-mail: sales@hoperf.com http://www.hoperf.com

Table of Contents Page

1. General Description 8
1.1. Simplified Block Diagram 8
1.2. Pin and Marking Diagram 9
1.3. Pin Description 10
2. Electrical Characteristics 11
2.1. ESD Notice 11
2.2. Absolute Maximum Ratings 11
2.3. Operating Range 11
2.4. Module Specification 12
2.4.1. Power Consumption 12
2.4.2. Frequency Synthesis 12
2.4.3. Receiver 13
2.4.4. Transmitter 14
2.4.5. Digital Specification 15
3. Module Description 16
3.1. Power Supply Strategy 16
3.2. Frequency Synthesis 16
3.2.1. Reference Oscillator 16
3.2.2. CLKOUT Output 17
3.2.3. PLL Architecture 17
3.2.4. Lock Time 18
3.2.5. Lock Detect Indicator 18
3.3. Transmitter Description 19
3.3.1. Architecture Description 19
3.3.2. Bit Rate Setting 19
3.3.3. FSK Modulation 20
3.3.4. OOK Modulation 20
3.3.5. Modulation Shaping 21
3.3.6. Power Amplifiers 21
3.3.7. High Power Settings 22
3.3.8. Output Power Summary 22
3.3.9. Over Current Protection 22
3.4. Receiver Description 23
3.4.1. Block Diagram 23
3.4.2. LNA - Single to Differential Buffer 23
3.4.3. Automatic Gain Control 24
3.4.4. Continuous-Time DAGC 25
3.4.5. Quadrature Mixer - ADCs - Decimators 26
3.4.6. Channel Filter 26
3.4.7. DC Cancellation 27

Tel: +86-755-82973805 Fax: +86-755-82973550 E-mail: sales@hoperf.com http://www.hoperf.com

3.4.8. Complex Filter - OOK 27
3.4.9. RSSI 27
3.4.10. Cordic 28
3.4.11. FSK Demodulator 29
3.4.12. OOK Demodulator 29
3.4.13. Bit Synchronizer 31
3.4.14. Frequency Error Indicator 31
3.4.15. Automatic Frequency Correction 32
3.4.16. Optimized Setup for Low Modulation Index Systems 33
3.4.17. Temperature Sensor 34
3.4.18. Timeout Function 34
4. Operating Modes 35
4.1. Basic Modes 35
4.2. Automatic Sequencer and Wake-Up Times 35
4.2.1. Transmitter Startup Time 36
4.2.2. Tx Start Procedure 36
4.2.3. Receiver Startup Time 36
4.2.4. Rx Start Procedure 38
4.2.5. Optimized Frequency Hopping Sequences 38
4.3. Listen Mode 39
4.3.1. Timings 39
4.3.2. Criteria 40
4.3.3. End of Cycle Actions 40
4.3.4. Stopping Listen Mode 41
4.3.5. RC Timer Accuracy 41
4.4. AutoModes 42
5. Data Processing 43
5.1. Overview 43
5.1.1. Block Diagram 43
5.1.2. Data Operation Modes 43
5.2. Control Block Description 44
5.2.1. SPI Interface 44
5.2.2. FIFO 45
5.2.3. Sync Word Recognition 46
5.2.4. Packet Handler 47
5.2.5. Control 47
5.3. Digital IO Pins Mapping 47
5.3.1. DIO Pins Mapping in Continuous Mode 48
5.3.2. DIO Pins Mapping in Packet Mode 48
5.4. Continuous Mode 49
5.4.1. General Description 49
5.4.2. Tx Processing 49

Tel: +86-755-82973805 Fax: +86-755-82973550 E-mail: sales@hoperf.com http://www.hoperf.com

5.4.3. Rx Processing 50
5.5. Packet Mode 50
5.5.1. General Description 50
5.5.2. Packet Format 51
5.5.3. Tx Processing (without AES) 53
5.5.4. Rx Processing (without AES) 54
5.5.5. AES 54
5.5.6. Handling Large Packets 56
5.5.7. Packet Filtering 56
5.5.8. DC-Free Data Mechanisms 58
6. Configuration and Status Registers 60
6.1. General Description 60
6.2. Common Configuration Registers 63
6.3. Transmitter Registers 66
6.4. Receiver Registers 67
6.5. IRQ and Pin Mapping Registers 69
6.6. Packet Engine Registers 71
6.7. Temperature Sensor Registers 74
6.8. Test Registers 74
7. Application Information 75
7.1. Crystal Resonator Specification 75
7.2. Reset of the Module 76
7.2.1. POR 76
7.2.2. Manual Reset 76
7.3. Reference Design 76
8. Packaging Information 77
8.1. Package Outline Drawing 77
9. Ordering Information 78

Tel: +86-755-82973805 Fax: +86-755-82973550 E-mail: sales@hoperf.com http://www.hoperf.com

Index of Figures

Page

Figure 1. Block Diagram 8
Figure 2. Pin Diagram 9
Figure 3. Marking Diagram 9
Figure 4. TBD 16
Figure 5. Transmitter Block Diagram 19
Figure 6. Output Power Curves 22
Figure 7. Receiver Block Diagram 23
Figure 8. AGC Thresholds Settings 24
Figure 9. RSSI Dynamic Curve 28
Figure 10. Cordic Extraction 28
Figure 11. OOK Peak Demodulator Description 29
Figure 12. Floor Threshold Optimization 30
Figure 13. Bit Synchronizer Description 31
Figure 14. FEI Process 32
Figure 15. Optimized AFC (AfcLowBetaOn=1) 33
Figure 16. Temperature Sensor Response 34
Figure 17. Tx Startup, FSK and OOK 36
Figure 18. Rx Startup - No AGC, no AFC 37
Figure 19. Rx Startup - AGC, no AFC 37
Figure 20. Rx Startup - AGC and AFC 37
Figure 21. Listen Mode Sequence (no wanted signal is received) 39
Figure 22. Listen Mode Sequence (wanted signal is received) 41
Figure 23. Auto Modes of Packet Handler 42
Figure 24. RFM69C Data Processing Conceptual View 43
Figure 25. SPI Timing Diagram (single access) 44
Figure 26. FIFO and Shift Register (SR) 45
Figure 27. FifoLevel IRQ Source Behavior 46
Figure 28. Sync Word Recognition 47
Figure 29. Continuous Mode Conceptual View 49
Figure 30. Tx Processing in Continuous Mode 49
Figure 31. Rx Processing in Continuous Mode 50
Figure 32. Packet Mode Conceptual View 51
Figure 33. Fixed Length Packet Format 52
Figure 34. Variable Length Packet Format 52
Figure 35. Unlimited Length Packet Format 53
Figure 36. CRC Implementation 58
Figure 37. Manchester Encoding/Decoding 58
Figure 38. Data Whitening 59
Figure 39. POR Timing Diagram 75
Figure 40. Manual Reset Timing Diagram 76
Figure 41. +13dBm Schematic 76

Tel: +86-755-82973805 Fax: +86-755-82973550 E-mail: sales@hoperf.com http://www.hoperf.com

Figure 42. Packaging Outline Drawing 77

Index of Tables

Page

Table 1. RFM69C Pinouts 10
Table 2. Absolute Maximum Ratings 11
Table 3. Operating Range 11
Table 4. Power Consumption Specification 12
Table 5. Frequency Synthesizer Specification 12
Table 6. Receiver Specification 13
Table 7. Transmitter Specification 14
Table 8. Digital Specification 15
Table 9. Bit Rate Examples 20
Table 10. Power Amplifier Mode Selection Truth Table 21
Table 11. High Power Settings 22
Table 12. LNA Gain Settings 23
Table 13. Receiver Performance Summary 25
Table 14. Available RxBw Settings 26
Table 15. Available DCC Cutoff Frequencies 27
Table 16. Basic Transceiver Modes 35
Table 17. Range of Durations in Listen Mode 39
Table 18. Signal Acceptance Criteria in Listen Mode 40
Table 19. End of Listen Cycle Actions 40
Table 20. Status of FIFO when Switching Between Different Modes of the Module 46
Table 21. DIO Mapping, Continuous Mode 48
Table 22. DIO Mapping, Packet Mode 48
Table 23. Registers Summary 60
Table 24. Common Configuration Registers 63
Table 25. Transmitter Registers 66
Table 26. Receiver Registers 67
Table 27. IRQ and Pin Mapping Registers 69
Table 28. Packet Engine Registers 71
Table 29. Temperature Sensor Registers 74
Table 30. Test Registers 74
Table 31. Crystal Specification 75

Tel: +86-755-82973805 Fax: +86-755-82973550 E-mail: sales@hoperf.com http://www.hoperf.com

Acronyms

BOM	Bill Of Materials
BR	Bit Rate
BW	Bandwidth
CCITT	Comité Consultatif International Téléphonique et Télégraphique - ITU
CRC	Cyclic Redundancy Check
DAC	Digital to Analog Converter
ETSI	European Telecommunications Standards Institute
FCC	Federal Communications Commission
Fdev	Frequency Deviation
FIFO	First In First Out
FIR	Finite Impulse Response
FS	Frequency Synthesizer
FSK	Frequency Shift Keying
GUI	Graphical User Interface
IC	Integrated Circuit
ID	IDentificator
IF	Intermediate Frequency
IRQ	Interrupt ReQuest
ITU	International Telecommunication Union
LFSR	Linear Feedback Shift Register
LNA	Low Noise Amplifier
LO	Local Oscillator
LSB	Least Significant Bit
MSB	Most Significant Bit
NRZ	Non Return to Zero
OOK	On Off Keying
PA	Power Amplifier
PCB	Printed Circuit Board
PLL	Phase-Locked Loop
POR	Power On Reset
RBW	Resolution BandWidth
RF	Radio Frequency
RSSI	Received Signal Strength Indicator
Rx	Receiver
SAW	Surface Acoustic Wave
SPI	Serial Peripheral Interface
SR	Shift Register
Stby	Standby
Tx	Transmitter
uC	Microcontroller
VCO	Voltage Controlled Oscillator
XO	Crystal Oscillator
XOR	eXclusive OR

Tel: +86-755-82973805 Fax: +86-755-82973550 E-mail: sales@hoperf.com http://www.hoperf.com

This product datasheet contains a detailed description of the RFM69C performance and functionality.

1. General Description

The RFM69C is a transceiver module ideally suited for today's high performance ISM band RF applications. It is intended for use as high-performance, low-cost FSK and OOK RF transceiver for robust frequency agile, half-duplex bi-directional RF links, and where stable and constant RF performance is required over the full operating range of the device down to 1.8V.

The RFM69C is intended for applications over a wide frequency range, including the 315MHz,433 MHz,868 MHz and 915MHz ISM bands. Coupled with a link budget in excess of 133 dB, the advanced system features of the RFM69C include a 66 byte TX/RX FIFO, configurable automatic packet handler, listen mode, temperature sensor and configurable DIOs which greatly enhance system flexibility whilst at the same time significantly reducing MCU requirements.

The RFM69C complies with both ETSI and FCC regulatory requirements

1.1. Simplified Block Diagram

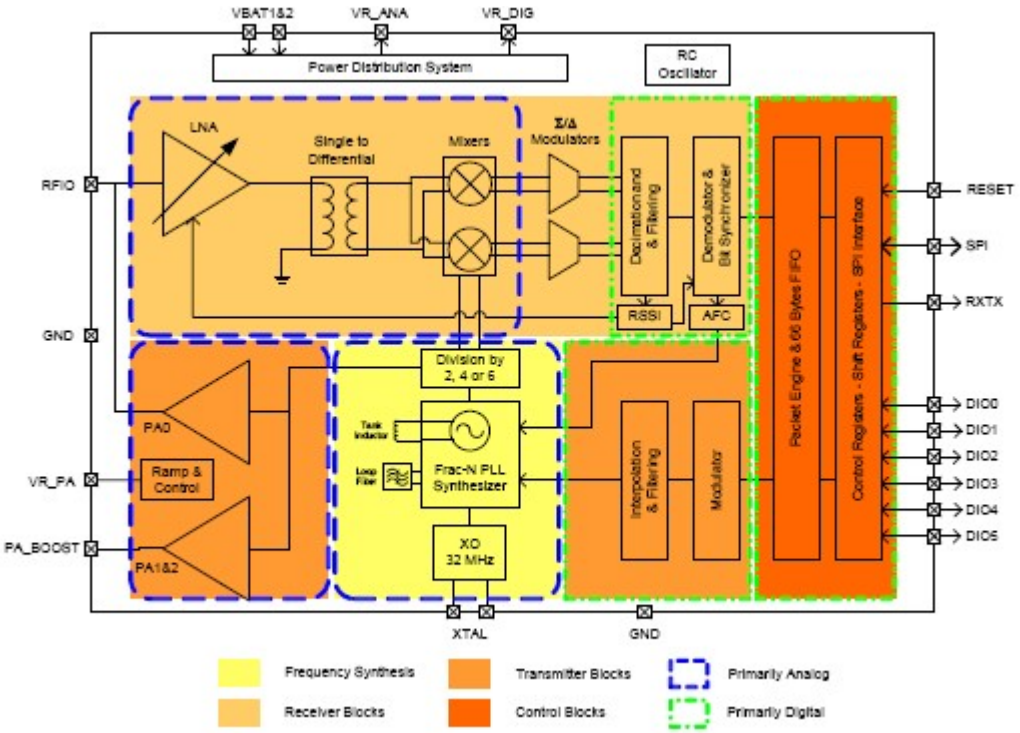

Figure 1. Block Diagram

Tel: +86-755-82973805 Fax: +86-755-82973550 E-mail: sales@hoperf.com http://www.hoperf.com

1.2. Pin and Marking Diagram

The following diagram shows the pin arrangement, top view.

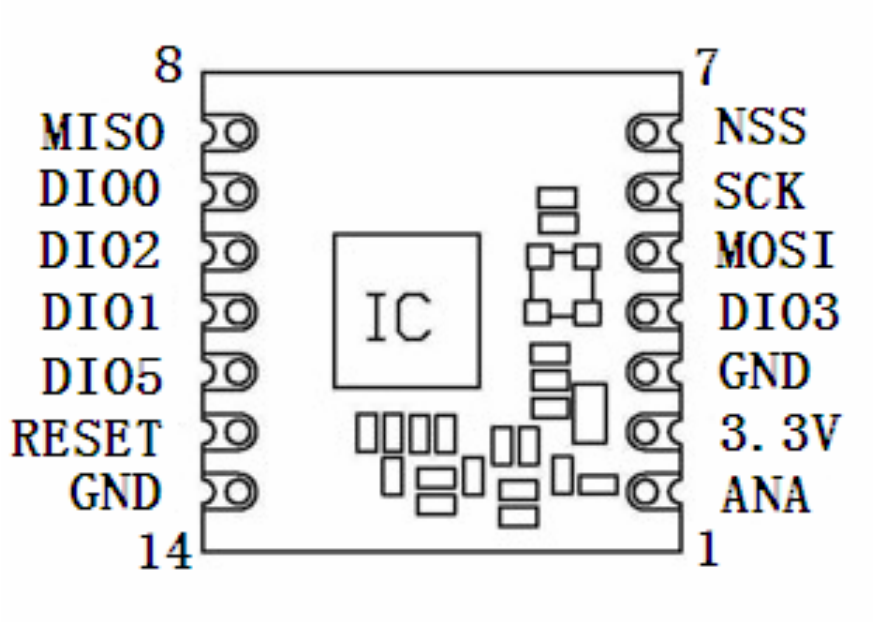

Figure 2. Pin Diagram

Tel: +86-755-82973805 Fax: +86-755-82973550 E-mail: sales@hoperf.com http://www.hoperf.com

1.3. Pin Description

Table 1 RFM69C Pinouts

Number	Name	Type	Description
1	ANA		RF signal output/input.
2	3.3V	-	Supply voltage
3	GND	-	Ground
4	DIO3	I/O	Digital I/O, software configured
5	MOSI	I	SPI Data input
6	SCK	I	SPI Clock input
7	NSS	I	SPI Chip select input
8	MISO	O	SPI Data output
9	DIO0	I/O	Digital I/O, software configured
10	DIO2	I/O	Digital I/O, software configured
11	DIO1	I/O	Digital I/O, software configured
12	DIO5	I/O	Digital I/O, software configured
13	RESET	I/O	Reset trigger input
14	GND	-	Ground

Tel: +86-755-82973805 Fax: +86-755-82973550 E-mail: sales@hoperf.com http://www.hoperf.com

2. Electrical Characteristics



2.2. Absolute Maximum Ratings

Stresses above the values listed below may cause permanent device failure. Exposure to absolute maximum ratings for extended periods may affect device reliability.

Table 2 Absolute Maximum Ratings

Symbol	Description	Min	Max	Unit
VDDmr	Supply Voltage	-0.5	3.9	V
Tmr	Temperature	-55	+115	° C
Tj	Junction temperature	-	+125	° C
Pmr	RF Input Level	-	+6	dBm
DC_13dBm	Duty Cycle of transmission at +13dBm output	-	1	%
VSWR_13dBm	Maximum VSWR at antenna port	-	3:1	-

2.3. Operating Range

Table 3 Operating Range

Symbol	Description	Min	Max	Unit
VDDop	Supply voltage	1.8	3.6	V
Top	Operational temperature range	-40	+85	°C
Clop	Load capacitance on digital ports	-	25	pF
ML	RF Input Level	-	0	dBm

Tel: +86-755-82973805 Fax: +86-755-82973550 E-mail: sales@hoperf.com http://www.hoperf.com

2.4.Module Consumption

The tables below give the electrical specifications of the transceiver under the following conditions: Supply voltage VBAT1= VBAT2=VDD=3.3 V, temperature = 25 °C, Pout = +13dBm, 2-level FSK modulation without pre-filtering, FDA = 5 kHz, Bit Rate = 4.8 kb/s and terminated in a matched 50 Ohm impedance, unless otherwise specified.

Note Unless otherwise specified, the performances in the other frequency bands are similar or better.

2.4.1. Power Consumption

Table 4 Power Consumption Specification

Symbol	Description	Conditions	Min	Typ	Max	Unit
IDDSL	Supply current in Sleep mode		-	0.1	1	uA
IDDIDLE	Supply current in Idle mode	RC oscillator enabled	-	1.2	-	uA
IDDST	Supply current in Standby mode	Crystal oscillator enabled	-	1.25	1.5	mA
IDDFS	Supply current in Synthesizer mode		-	9	-	mA
IDDR	Supply current in Receive mode		-	16	-	mA
IDDT	Supply current in Transmit mode with appropriate matching, stable across VDD range	RFOP = +13 dBm, on RFIO pin RFOP = +10 dBm, on RFIO pin RFOP = 0 dBm, on RFIO pin RFOP = -1 dBm, on RFIO pin	- - - -	45 33 20 16	- - - -	mA mA mA mA

2.4.2. Frequency Synthesis

Table 5 Frequency Synthesizer Specification

Symbol	Description	Conditions	Min	Typ	Max	Unit
FR	Synthesizer Frequency Range	315MHz Module 433MHz Module 868MHz Module 915MHz Module	290 424 862 890		340 510 890 1020	MHz MHz MHz MHz
FXOSC	Crystal oscillator frequency	For All Module	-	32	-	MHz
TS_OSC	Crystal oscillator wake-up time		-	250	500	us
TS_FS	Frequency synthesizer wake-up time to PllLock signal	From Standby mode	-	80	150	us
TS_HOP	Frequency synthesizer hop time at most 10 kHz away from the target	200 kHz step 1 MHz step 5 MHz step 7 MHz step 12 MHz step 20 MHz step 25 MHz step	- - - - - - -	20 20 50 50 80 80 80	- - - - - - -	us us us us us us us

Tel: +86-755-82973805 Fax: +86-755-82973550 E-mail: sales@hoperf.com http://www.hoperf.com

FSTEP	Frequency synthesizer step	FSTEP = FXOSC/2^{19}	-	61.0	-	Hz
FRC	RC Oscillator frequency	After calibration	-	62.5	-	kHz
BRF	Bit rate, FSK	Programmable	1.2	-	300	kbps
BRO	Bit rate, OOK	Programmable	1.2	-	32.768	kbps
FDA	Frequency deviation, FSK	Programmable FDA + BRF/2 =< 500 kHz	0.6	-	300	kHz

2.4.3. Receiver

All receiver tests are performed with *RxBw* = 10 kHz (Single Side Bandwidth) as programmed in *RegRxBw*, receiving a PN15 sequence with a BER of 0.1% (Bit Synchronizer is enabled), unless otherwise specified. The LNA impedance is set to 200 Ohms, by setting bit *LnaZin* in *RegLna* to 1. Blocking tests are performed with an unmodulated interferer. The wanted signal power for the Blocking Immunity, ACR, IIP2, IIP3 and AMR tests is set 3 dB above the nominal sensitivity level.

Table 6 Receiver Specification

Symbol	Description	Conditions	Min	Typ	Max	Unit
RFS_F	FSK sensitivity, highest LNA gain	FDA = 5 kHz, BR = 1.2 kb/s FDA = 5 kHz, BR = 4.8 kb/s FDA = 40 kHz, BR = 38.4 kb/s	- - -	-118 -114 -105	- - -	dBm dBm dBm
		FDA = 5 kHz, BR = 1.2 kb/s *	-	-120	-	dBm
RFS_O	OOK sensitivity, highest LNA gain	BR = 4.8 kb/s	-	-112	-109	dBm
CCR	Co-Channel Rejection		-13	-10	-	dB
ACR	Adjacent Channel Rejection	Offset = +/- 25 kHz Offset = +/- 50 kHz	- 37	42 42	- -	dB dB
BI	Blocking Immunity	Offset = +/- 1 MHz Offset = +/- 2 MHz Offset = +/- 10 MHz	- - -	66 71 79	- - -	dB dB dB
	Blocking Immunity Wanted signal at sensitivity +16dB	Offset = +/- 1 MHz Offset = +/- 2 MHz Offset = +/- 10 MHz	- - -	62 65 73	- - -	dB dB dB
AMR	AM Rejection , AM modulated interferer with 100% modulation depth, fm = 1 kHz, square	Offset = +/- 1 MHz Offset = +/- 2 MHz Offset = +/- 10 MHz	- - -	66 71 79	- - -	dB dB dB
IIP2	2nd order Input Intercept Point Unwanted tones are 20 MHz above the LO	Lowest LNA gain Highest LNA gain	- -	+75 +35	- -	dBm dBm

Tel: +86-755-82973805 Fax: +86-755-82973550 E-mail: sales@hoperf.com http://www.hoperf.com

IIP3	3rd order Input Intercept point Unwanted tones are 1MHz and 1.995 MHz above the LO	Lowest LNA gain Highest LNA gain	- -23	+13 -18	- -	dBm dBm
BW_SSB	Single Side channel filter BW	Programmable	2.6	-	500	kHz
IMR_OOK	Image rejection in OOK mode	Wanted signal level = -106 dBm	27	30	-	dB
TS_RE	Receiver wake-up time, from PLL locked state to *RxReady*	RxBw = 10 kHz, BR = 4.8 kb/s RxBw = 200 kHz, BR = 100 kb/s	- -	1.7 96	- -	ms us
TS_RE_AGC	Receiver wake-up time, from PLL locked state, AGC enabled	RxBw = 10 kHz, BR = 4.8 kb/s RxBw = 200 kHz, BR = 100 kb/s	-	3.0 163		ms us
TS_RE_AGC &AFC	Receiver wake-up time, from PLL lock state, AGC and AFC enabled	RxBw = 10 kHz, BR = 4.8 kb/s RxBw = 200 kHz, BR = 100 kb/s		4.8 265		ms us
TS_FEI	FEI sampling time	Receiver is ready	-	$4.T_{bit}$	-	-
TS_AFC	AFC Response Time	Receiver is ready	-	$4.T_{bit}$	-	-
TS_RSSI	RSSI Response Time	Receiver is ready	-	$2.T_{bit}$	-	-
DR_RSSI	RSSI Dynamic Range	AGC enabled Min Max	- -	-115 0	- -	dBm dBm

* *Set SensitivityBoost in RegTestLna to 0x2D to reduce the noise floor in the receiver*

2.4.4. Transmitter

Table 7 Transmitter Specification

Symbol	Description	Conditions	Min	Typ	Max	Unit
RF_OP	RF output power in 50 ohms On RFIO pin	Programmable with 1dB steps Max Min	- -	+13 -18	- -	dBm dBm
					-	
ΔRF_OP	RF output power stability	From VDD=1.8V to 3.6V	-	+/-0.3	-	dB
PHN	Transmitter Phase Noise	50 kHz Offset from carrier 868 / 915 MHz bands 434 / 315 MHz bands	 - -	 -95 -99	 - -	 dBc/ Hz
ACP	Transmitter adjacent channel power (measured at 25 kHz off-set)	BT=0.5 . Measurement conditions as defined by EN 300 220-1 V2.1.1	-	-	-37	dBm
TS_TR	Transmitter wake up time, to the first rising edge of DCLK	Frequency Synthesizer enabled, *PaRamp* = 10 us, BR = 4.8 kb/s.	-	120	-	us

Tel: +86-755-82973805 Fax: +86-755-82973550 E-mail: sales@hoperf.com http://www.hoperf.com

2.4.5. Digital Specification

Conditions: Temp = 25°C, VDD = 3.3V, FXOSC = 32 MHz, unless otherwise specified.

Table 8 Digital Specification

Symbol	Description	Conditions	Min	Typ	Max	Unit
V_{IH}	Digital input level high		0.8	-	-	VDD
V_{IL}	Digital input level low		-	-	0.2	VDD
V_{OH}	Digital output level high	Imax = 1 mA	0.9	-	-	VDD
V_{OL}	Digital output level low	Imax = -1 mA	-	-	0.1	VDD
F_{SCK}	SCK frequency		-	-	10	MHz
t_{ch}	SCK high time		50	-	-	ns
t_{cl}	SCK low time		50	-	-	ns
t_{rise}	SCK rise time		-	5	-	ns
t_{fall}	SCK fall time		-	5	-	ns
t_{setup}	MOSI setup time	from MOSI change to SCK rising edge	30	-	-	ns
t_{hold}	MOSI hold time	from SCK rising edge to MOSI change	60	-	-	ns
t_{nsetup}	NSS setup time	from NSS falling edge to SCK rising edge	30	-	-	ns
t_{nhold}	NSS hold time	from SCK falling edge to NSS rising edge, normal mode	30	-	-	ns
t_{nhigh}	NSS high time between SPI accesses		20	-	-	ns
T_DATA	DATA hold and setup time		250	-	-	ns

3. Module Description

This section describes in depth the architecture of the RFM69C low-power, highly integrated transceiver.

3.1. Power Supply Strategy

The RFM69C employs an advanced power supply scheme, which provides stable operating characteristics over the full temperature and voltage range of operation. This includes the full output power of +13dBm maintained from 1.8Vto 3.6V.

The RFM69C can be powered from any low-noise voltage source via pins VBAT1 and VBAT2. Decoupling capacitors should be connected, as suggested in the reference design, on VR_PA, VR_DIG and VR_ANA pins to ensure a correct operation of the built-in voltage regulators.

3.2. Frequency Synthesis

The LO generation on the RFM69C is based on a state-of-the-art fractional-N PLL. The PLL is fully integrated with

Tel: +86-755-82973805 Fax: +86-755-82973550 E-mail: sales@hoperf.com http://www.hoperf.com

automatic calibration.

3.2.1. Reference Oscillator

The crystal oscillator is the main timing reference of the RFM69C. It is used as a reference for the frequency synthesizer and as a clock for the digital processing.

The XO startup time, TS_OSC, depends on the actual XTAL being connected on pins XTA and XTB. When using the built-in sequencer, the RFM69C optimizes the startup time and automatically triggers the PLL when the XO signal is stable. To manually control the startup time, the user should either wait for TS_OSC max, or monitor the signal CLKOUT which will only be made available on the output buffer when a stable XO oscillation is achieved.

Figure 4. ： T B D

Tel: +86-755-82973805 Fax: +86-755-82973550 E-mail: sales@hoperf.com http://www.hoperf.com

3.2.2. CLKOUT Output

The reference frequency, or a fraction of it, can be provided on DIO5 by modifying bits *ClkOut* in *RegDioMapping2*. Two typical applications of the CLKOUT output include:

- To provide a clock output for a companion processor, thus saving the cost of an additional oscillator. CLKOUT can be made available in any operation mode except Sleep mode and is automatically enabled at power on reset.
- To provide an oscillator reference output. Measurement of the CLKOUT signal enables simple software trimming of the initial crystal tolerance.

Note *to minimize the current consumption of the RFM69C, please ensure that the CLKOUT signal is disabled when not required.*

3.2.3. PLL Architecture

The frequency synthesizer generating the LO frequency for both the receiver and the transmitter is a fractional-N sigma-delta PLL. The PLL incorporates a third order loop capable of fast auto-calibration, and it has a fast switching-time. The VCO and the loop filter are both fully integrated, removing the need for an external tight-tolerance, high-Q inductor in the VCO tank circuit.

3.2.3.1. VCO

The VCO runs at 2, 4 or 6 times the RF frequency (respectively in the 915, 434 and 315 MHz bands) to reduce any LO leakage in receiver mode, to improve the quadrature precision of the receiver, and to reduce the pulling effects on the VCO during transmission.

The VCO calibration is fully automated. A coarse adjustment is carried out at power on reset, and a fine tuning is performed each time the RFM69C PLL is activated. Automatic calibration times are fully transparent to the end-user, as their processing time is included in the *TS_TE* and *TS_RE* specifications.

3.2.3.2. PLL Bandwidth

The bandwidth of the RFM69C Fractional-N PLL is wide enough to allow for:

- High speed FSK modulation, up to 300 kb/s, inside the PLL bandwidth
- Very fast PLL lock times, enabling both short startup and fast hop times required for frequency agile applications

3.2.3.3. Carrier Frequency and Resolution

The RFM69C PLL embeds a 19-bit sigma-delta modulator and its frequency resolution, constant over the whole frequency range, and is given by:

$$F_{STEP} = \frac{F_{XOSC}}{2^{19}}$$

The carrier frequency is programmed through *RegFrf*, split across addresses 0x07 to 0x09:

$$F_{RF} = F_{STEP} \cdot Frf(23,0)$$

Note *The Frf setting is split across 3 bytes. A change in the center frequency will only be taken into account when the least significant byte FrfLsb in RegFrfLsb is written. This allows for more complex modulation schemes such as m-ary FSK, where frequency modulation is achieved by changing the programmed RF frequency.*

Tel: +86-755-82973805 Fax: +86-755-82973550 E-mail: sales@hoperf.com http://www.hoperf.com

3.2.4. Lock Time

PLL lock time *TS_FS* is a function of a number of technical factors, such as synthesized frequency, frequency step, etc. When using the built-in sequencer, the RFM69C optimizes the startup time and automatically starts the receiver or the transmitter when the PLL has locked. To manually control the startup time, the user should either wait for *TS_FS* max given in the specification, or monitor the signal PLL lock detect indicator, which is set when the PLL has is within its locking range.

When performing an AFC, which usually corrects very small frequency errors, the PLL response time is approximately:

$$T_{PLLAFC} = \frac{5}{PLLBW}$$

In a frequency hopping scheme, the timings *TS_HOP* given in the table of specifications give an order of magnitude for the expected lock times.

3.2.5. Lock Detect Indicator

A lock indication signal can be made available on some of the DIO pins, and is toggled high when the PLL reaches its locking range. Please refer to Table 21 and Table 22 to map this interrupt to the desired pins.

Note *The lock detect block may indicate an unlock condition (signal toggling low) when the transmitter is FSK modulated with large frequency deviation settings.*

Tel: +86-755-82973805 Fax: +86-755-82973550 E-mail: sales@hoperf.com http://www.hoperf.com

3.3. Transmitter Description

The transmitter of RFM69C comprises the frequency synthesizer, modulator and power amplifier blocks.

3.3.1. Architecture Description

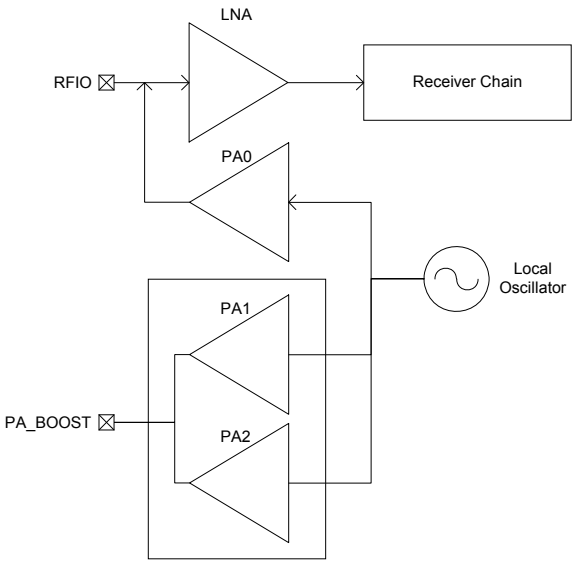

Figure 5. Transmitter Block Diagram

3.3.2. Bit Rate Setting

When using the RFM69C in Continuous mode, the data stream to be transmitted can be input directly to the modulator via the DIO2/DATA pin in an asynchronous manner, unless Gaussian filtering is used, in which case the DCLK signal on the DIO1/DCLK pin is used to synchronize the data stream. See section 3.3.5 for details on the Gaussian filter.

In Packet mode or in Continuous mode with Gaussian filtering enabled (refer to section 5.5 for details), the Bit Rate (BR) is controlled by bits *BitRate* in *RegBitrate*:

$$BR = \frac{F_{XOSC}}{BitRate}$$

Amongst others, the following Bit Rates are accessible:

Tel: +86-755-82973805 Fax: +86-755-82973550 E-mail: sales@hoperf.com http://www.hoperf.com

Table 9 Bit Rate Examples

Type	BitRate (15:8)	BitRate (7:0)	(G)FSK (G)MSK	OOK	Actual BR (b/s)
Classical modem baud rates (multiples of 1.2 kbps)	0x68	0x2B	1.2 kbps	1.2 kbps	1200.015
	0x34	0x15	2.4 kbps	2.4 kbps	2400.060
	0x1A	0x0B	4.8 kbps	4.8 kbps	4799.760
	0x0D	0x05	9.6 kbps	9.6 kbps	9600.960
	0x06	0x83	19.2 kbps	19.2 kbps	19196.16
	0x03	0x41	38.4 kbps		38415.36
	0x01	0xA1	76.8 kbps		76738.60
	0x00	0xD0	153.6 kbps		153846.1
Classical modem baud rates (multiples of 0.9 kbps)	0x02	0x2C	57.6 kbps		57553.95
	0x01	0x16	115.2 kbps		115107.9
Round bit rates (multiples of 12.5, 25 and 50 kbps)	0x0A	0x00	12.5 kbps	12.5 kbps	12500.00
	0x05	0x00	25 kbps	25 kbps	25000.00
	0x02	0x80	50 kbps		50000.00
	0x01	0x40	100 kbps		100000.0
	0x00	0xD5	150 kbps		150234.7
	0x00	0xA0	200 kbps		200000.0
	0x00	0x80	250 kbps		250000.0
	0x00	0x6B	300 kbps		299065.4
Watch Xtal frequency	0x03	0xD1	32.768 kbps	32.768 kbps	32753.32

3.3.3. FSK Modulation

FSK modulation is performed inside the PLL bandwidth, by changing the fractional divider ratio in the feedback loop of the PLL. The large resolution of the sigma-delta modulator, allows for very narrow frequency deviation. The frequency deviation FDEV is given by:

$$F_{DEV} = F_{STEP} \times Fdev(13,0)$$

To ensure a proper modulation, the following limit applies:

$$F_{DEV} + \frac{BR}{2} \leq 500kHz$$

Note no constraint applies to the modulation index of the transmitter, but the frequency deviation must exceed 600 Hz.

3.3.4. OOK Modulation

OOK modulation is applied by switching on and off the Power Amplifier. Digital control and smoothing are available to improve the transient power response of the OOK transmitter.

Tel: +86-755-82973805 Fax: +86-755-82973550 E-mail: sales@hoperf.com http://www.hoperf.com

3.3.5. Modulation Shaping

Modulation shaping can be applied in both OOK and FSK modulation modes, to improve the narrowband response of the transmitter. Both shaping features are controlled with *PaRamp* bits in *RegPaRamp*.

- In FSK mode, a Gaussian filter with BT = 0.3, 0.5 or 1 is used to filter the modulation stream, at the input of the sigma-delta modulator. If the Gaussian filter is enabled when the RFM69C is in Continuous mode, DCLK signal on the DIO1/DCLK pin will trigger an interrupt on the uC each time a new bit has to be transmitted. Please refer to section 5.4.2 for details.
- When OOK modulation is used, the PA bias voltages are ramped up and down smoothly when the PA is turned on and off, to reduce spectral splatter.

Note the transmitter must be restarted if the PaRamp setting is changed, in order to recalibrate the built-in filter.

3.3.6. Power Amplifiers

Three power amplifier blocks are embedded in the RFM69C. The first one, herein referred to as PA0, can generate up to +13 dBm into a 50 Ohm load. PA0 shares a common front-end pin RFIO with the receiver LNA.

- A low power mode, where -2 dBm < Pout < 13 dBm, with PA1 enabled

All PA settings are controlled by *RegPaLevel*, and the truth table of settings is given in Table 10.

Table 10 Power Amplifier Mode Selection Truth Table

Pa0On	*Pa1On*	*Pa2On*	Mode	Power Range	Pout Formula
1	0	0	PA0 output on pin RFIO	-18 to +13 dBm	-18 dBm + *OutputPower*
Other combinations			Reserved		

Notes - To ensure correct operation at the highest power levels, please make sure to adjust the Over Current Protection Limit accordingly in RegOcp,

not used (+13dBm applications and less), the pin can be left floating.

Tel: +86-755-82973805 Fax: +86-755-82973550 E-mail: sales@hoperf.com http://www.hoperf.com

3.3.8. Output Power Summary

The curves below summarize the possible PA options on the RFM69C:

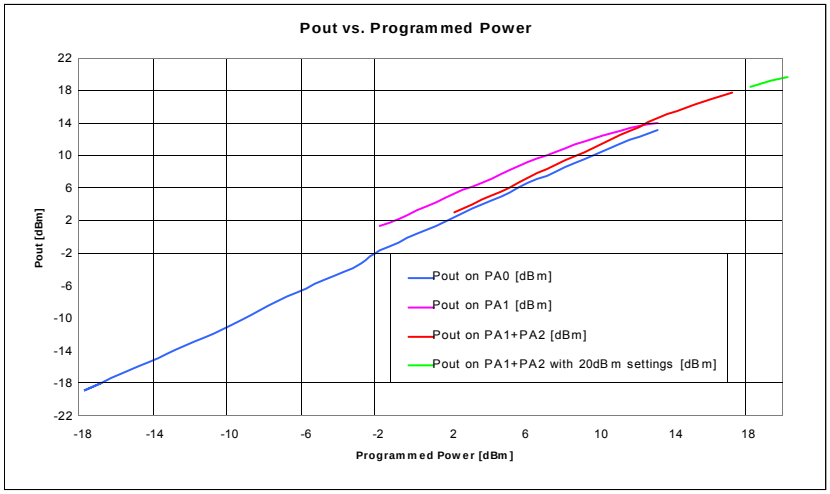

Figure 6. Output Power Curves

3.3.9. Over Current Protection

An over current protection block is built-in the module. It helps preventing surge currents required when the transmitter is used at its highest power levels, thus protecting the battery that may power the application. The current clamping value is controlled by *OcpTrim* bits in *RegOcp*, and is calculated with the following formula:

$$Imax = 45 + 5 * OcpTrim\ mA$$

Note *Imax sets a limit on the current drain of the Power Amplifier only, hence the maximum current drain of the RFM69C is equal to Imax + I_{FS}*

Tel: +86-755-82973805 Fax: +86-755-82973550 E-mail: sales@hoperf.com http://www.hoperf.com

3.4. Receiver Description

The RFM69C features a digital receiver with the analog to digital conversion process being performed directly following the LNA-Mixers block. The zero-IF receiver is able to handle (G)FSK and (G)MSK modulation. ASK and OOK modulation is, however, demodulated by a low-IF architecture. All the filtering, demodulation, gain control, synchronization and packet handling is performed digitally, which allows a very wide range of bit rates and frequency deviations to be selected. The receiver is also capable of automatic gain calibration in order to improve precision on RSSI measurements.

3.4.1. Block Diagram

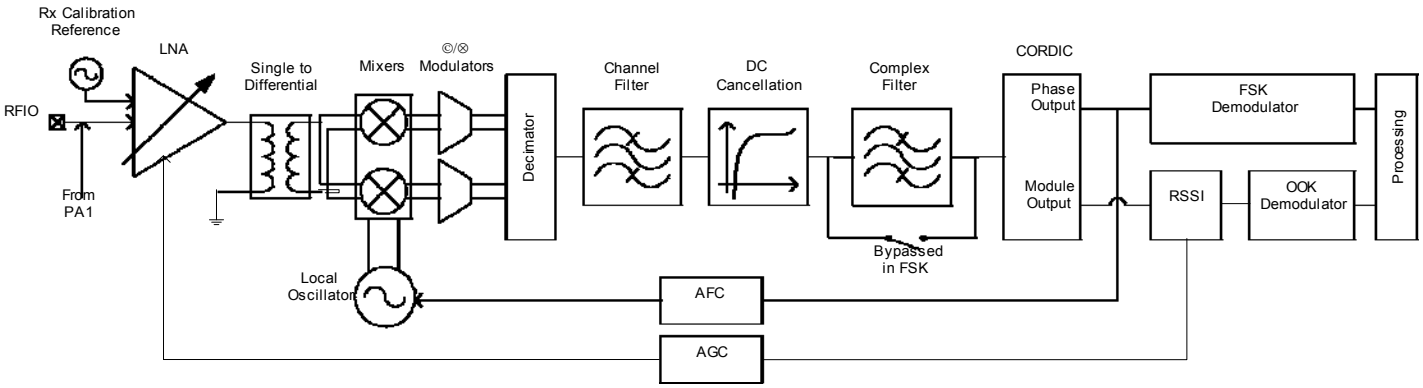

Figure 7. Receiver Block Diagram

The following sections give a brief description of each of the receiver blocks.

3.4.2. LNA - Single to Differential Buffer

The LNA uses a common-gate topology, which allows for a flat characteristic over the whole frequency range. It is designed to have an input impedance of 50 Ohms or 200 Ohms (as selected with bit *LnaZin* in *RegLna)*, and the parasitic capacitance at the LNA input port is cancelled with the external RF choke. A single to differential buffer is implemented to improve the second order linearity of the receiver.

The LNA gain, including the single-to-differential buffer, is programmable over a 48 dB dynamic range, and control is either manual or automatic with the embedded AGC function.

Note *In the specific case where the LNA gain is manually set by the user, the receiver will not be able to properly handle FSK signals with a modulation index smaller than 2 at an input power greater than the 1dB compression point, tabulated in section 3.4.3.*

Table 12 LNA Gain Settings

LnaGainSelect	LNA Gain	Gain Setting
000	Any of the below, set by the AGC loop	-
001	Max gain	G1
010	Max gain - 6 dB	G2
011	Max gain - 12 dB	G3
100	Max gain - 24 dB	G4
101	Max gain - 36 dB	G5
110	Max gain - 48 dB	G6
111	Reserved	-

Tel: +86-755-82973805 Fax: +86-755-82973550 E-mail: sales@hoperf.com http://www.hoperf.com

3.4.3. Automatic Gain Control

By default (*LnaGainSelect = 000*), the LNA gain is controlled by a digital AGC loop in order to obtain the optimal sensitivity/ linearity trade-off.

Regardless of the data transfer mode (Packet or Continuous), the following series of events takes place when the receiver is enabled:

- The receiver stays in WAIT mode, until *RssiValue* exceeds *RssiThreshold* for two consecutive samples. Its power consumption is the receiver power consumption.
- When this condition is satisfied, the receiver automatically selects the most suitable LNA gain, optimizing the sensitivity/linearity trade-off.
- The programmed LNA gain, read-accessible with *LnaCurrentGain* in *RegLna*, is carried on for the whole duration of the packet, until one of the following conditions is fulfilled:
- Packet mode: if *AutoRxRestartOn = 0,* the LNA gain will remain the same for the reception of the following packet. If *AutoRxRestartOn = 1*, after the controller has emptied the FIFO the receiver will re-enter the WAIT mode described above, after a delay of *InterPacketRxDelay*, allowing for the distant transmitter to ramp down, hence avoiding a false RSSI detection. In both cases (AutoRxRestartOn=0 or AutoRxRestartOn=1), the receiver can also re-enter the WAIT mode by setting *RestartRx* bit to 1. The user can decide to do so, to manually launch a new AGC procedure.
- Continuous mode: upon reception of valid data, the user can decide to either leave the receiver enabled with the same LNA gain, or to restart the procedure, by setting *RestartRx* bit to 1, resuming the WAIT mode of the receiver, described above.

Notes - the AGC procedure must be performed while receiving preamble in FSK mode

- in OOK mode, the AGC will give better results if performed while receiving a constant "1" sequence

The following figure illustrates the AGC behavior:

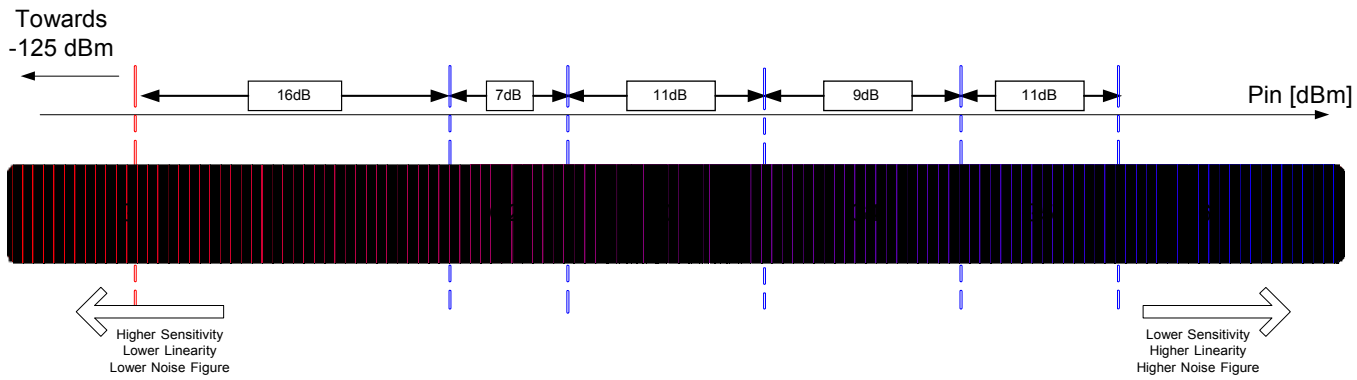

Figure 8. AGC Thresholds Settings

The following table summarizes the performance (typical figures) of the complete receiver:

Tel: +86-755-82973805 Fax: +86-755-82973550 E-mail: sales@hoperf.com http://www.hoperf.com

Table 13 Receiver Performance Summary

Input Power Pin	Gain Setting	Receiver Performance (typ)			
		P_{-1dB} [dBm]	NF [dB]	IIP3 [dBm]	IIP2 [dBm]
Pin < AgcThresh1	G1	-37	7	-18	+35
AgcThresh1 < Pin < AgcThresh2	G2	-31	13	-15	+40
AgcThresh2 < Pin < AgcThresh3	G3	-26	18	-8	+48
AgcThresh3 < Pin < AgcThresh4	G4	-14	27	-1	+62
AgcThresh4 < Pin < AgcThresh5	G5	>-6	36	+13	+68
AgcThresh5 < Pin	G6	>0	44	+20	+75

3.4.3.1. RssiThreshold Setting

For correct operation of the AGC, *RssiThreshold* in *RegRssiThresh* must be set to the sensitivity of the receiver. The receiver will remain in WAIT mode until *RssiThreshold* is exceeded.

Note *When AFC is enabled and performed automatically at the receiver startup, the channel filter used by the receiver during the AFC and the AGC is RxBwAfc instead of the standard RxBw setting. This may impact the sensitivity of the receiver, and the setting of RssiThreshold accordingly*

3.4.3.2. AGC Reference

The AGC reference level is automatically computed in the RFM69C, according to:

AGC Reference [dBm] = -174 + NF + DemodSnr +10.log(2*_RxBw_) + FadingMargin [dBm]

With:

- *NF* = 7dB : LNA's Noise Figure at maximum gain
- *DemodSnr* = 8 dB : SNR needed by the demodulator
- *RxBw* : Single sideband channel filter bandwidth
- *FadingMargin = 5 dB* : Fading margin

3.4.4. Continuous-Time DAGC

In addition to the automatic gain control described in section 3.4.3, the RFM69C is capable of continuously adjusting its gain in the digital domain, after the analog to digital conversion has occured. This feature, named DAGC, is fully transparent to the end user. The digital gain adjustment is repeated every 2 bits, and has the following benefits:

- Fully transparent to the end user
- Improves the fading margin of the receiver during the reception of a packet, even if the gain of the LNA is frozen
- Improves the receiver robustness in fast fading signal conditions, by quickly adjusting the receiver gain (every 2 bits)
- Works in Continuous, Packet, and unlimited length Packet modes

The DAGC is enabled by setting *RegTestDagc* to 0x20 for low modulation index systems (i.e. when *AfcLowBetaOn*=1, refer to section 3.4.16), and 0x30 for other systems. It is recommended to always enable the DAGC.

Tel: +86-755-82973805 Fax: +86-755-82973550 E-mail: sales@hoperf.com http://www.hoperf.com

3.4.5. Quadrature Mixer - ADCs - Decimators

The mixer is inserted between output of the RF buffer stage and the input of the analog to digital converter (ADC) of the receiver section. This block is designed to translate the spectrum of the input RF signal to base-band, and offer both high IIP2 and IIP3 responses.

In the lower bands of operation (290 to 510 MHz), the multi-phase mixing architecture with weighted phases improves the rejection of the LO harmonics in receiver mode, hence increasing the receiver immunity to out-of-band interferers.

The I and Q digitalization is made by two 5th order continuous-time Sigma-Delta Analog to Digital Converters (ADC). Their gain is not constant over temperature, but the whole receiver is calibrated before reception, so that this inaccuracy has no impact on the RSSI precision. The ADC output is one bit per channel. It needs to be decimated and filtered afterwards. This ADC can also be used for temperature measurement, please refer to section 3.4.17 for more details.

The decimators decrease the sample rate of the incoming signal in order to optimize the area and power consumption of the following receiver blocks.

3.4.6. Channel Filter

The role of the channel filter is to filter out the noise and interferers outside of the channel. Channel filtering on the RFM69C is implemented with a 16-tap Finite Impulse Response (FIR) filter, providing an outstanding Adjacent Channel Rejection performance, even for narrowband applications.

Note *to respect oversampling rules in the decimation chain of the receiver, the Bit Rate cannot be set at a higher value than 2 times the single-side receiver bandwidth (BitRate < 2 x RxBw)*

The single-side channel filter bandwidth *RxBw* is controlled by the parameters *RxBwMant* and *RxBwExp* in *RegRxBw:*

- When FSK modulation is enabled:

$$RxBw = \frac{FXOSC}{RxBwMant \cdot 2^{RxBwExp+2}}$$

- When OOK modulation is enabled:

$$RxBw = \frac{FXOSC}{RxBwMant \cdot 2^{RxBwExp+3}}$$

The following channel filter bandwidths are accessible (oscillator is mandated at 32 MHz):

Table 14 Available RxBw Settings

RxBwMant **(binary/value)**	***RxBwExp*** **(decimal)**	***RxBw (kHz)***	
		FSK ***ModulationType=00***	**OOK** ***ModulationType=01***
10b / 24	7	2.6	1.3
01b / 20	7	3.1	1.6
00b / 16	7	3.9	2.0
10b / 24	6	5.2	2.6
01b / 20	6	6.3	3.1
00b / 16	6	7.8	3.9
10b / 24	5	10.4	5.2
01b / 20	5	12.5	6.3
00b / 16	5	15.6	7.8
10b / 24	4	20.8	10.4

Tel: +86-755-82973805 Fax: +86-755-82973550 E-mail: sales@hoperf.com http://www.hoperf.com

01b / 20	4	25.0	12.5
00b / 16	4	31.3	15.6
10b / 24	3	41.7	20.8
01b / 20	3	50.0	25.0
00b / 16	3	62.5	31.3
10b / 24	2	83.3	41.7
01b / 20	2	100.0	50.0
00b / 16	2	125.0	62.5
10b / 24	1	166.7	83.3
01b / 20	1	200.0	100.0
00b / 16	1	250.0	125.0
10b / 24	0	333.3	166.7
01b / 20	0	400.0	200.0
00b / 16	0	500.0	250.0

3.4.7. DC Cancellation

DC cancellation is required in zero-IF architecture transceivers to remove any DC offset generated through self-reception. It is built-in the RFM69C and its adjustable cutoff frequency *fc* is controlled in *RegRxBw*:

Table 15 Available DCC Cutoff Frequencies

DccFreq* in *RegRxBw	**fc in % of RxBw**
000	16
001	8
010 (default)	4
011	2
100	1
101	0.5
110	0.25
111	0.125

The default value of *DccFreq* cutoff frequency is typically 4% of the RxBw (channel filter BW). The cutoff frequency of the DCC can however be increased to slightly improve the sensitivity, under wider modulation conditions. It is advised to adjust the DCC setting while monitoring the receiver sensitivity.

3.4.8. Complex Filter - OOK

In OOK mode the RFM69C is modified to a low-IF architecture. The IF frequency is automatically set to half the single side bandwidth of the channel filter (F_{IF} = 0.5 x *RxBw*). The Local Oscillator is automatically offset by the IF in the OOK receiver. A complex filter is implemented on the module to attenuate the resulting image frequency by typically 30 dB.

Note this filter is automatically bypassed when receiving FSK signals (ModulationType = 00 in *RegDataModul).*

3.4.9. RSSI

The RSSI block evaluates the amount of energy available within the receiver channel bandwidth. Its resolution is 0.5 dB, and it has a wide dynamic range to accommodate both small and large signal levels that may be present. Its acquisition time is very short, taking only 2 bit periods. The RSSI sampling must occur during the reception of preamble in FSK, and constant “1” reception in OOK.

Tel: +86-755-82973805 Fax: +86-755-82973550 E-mail: sales@hoperf.com http://www.hoperf.com

Note - RssiValue can only be read when it exceeds RssiThreshold

- The receiver is capable of automatic gain calibration, in order to improve the precision of its RSSI measurements. This function injects a known RF signal at the LNA input, and calibrates the receiver gain accordingly. This calibration is automatically performed during the PLL start-up, making it a transparent process to the end-user

- RSSI accuracy depends on all components located between the antenna port and pin RFIO, and is therefore limited to a few dB. Board-level calibration is advised to further improve accuracy

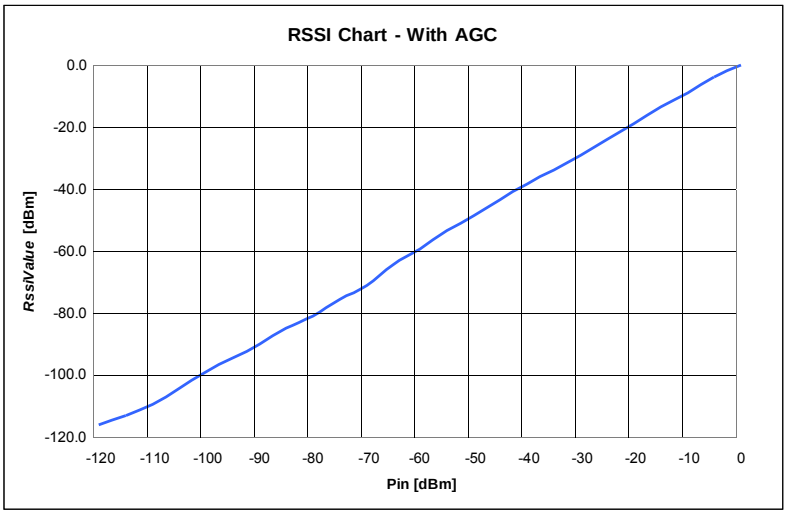

Figure 9. RSSI Dynamic Curve

3.4.10. Cordic

The Cordic task is to extract the phase and the amplitude of the modulation vector (I+j.Q). This information, still in the digital domain is used:

- Phase output: used by the FSK demodulator and the AFC blocks.
- Amplitude output: used by the RSSI block, for FSK demodulation, AGC and automatic gain calibration purposes.

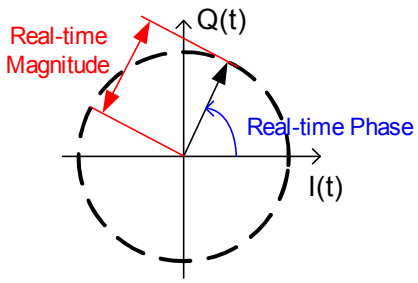

Figure 10. Cordic Extraction

Tel: +86-755-82973805 Fax: +86-755-82973550 E-mail: sales@hoperf.com http://www.hoperf.com

3.4.11. FSK Demodulator

The FSK demodulator of the RFM69C is designed to demodulate FSK, GFSK, MSK and GMSK modulated signals. It is most efficient when the modulation index of the signal is greater than 0.5 and below 10:

$$0.5 \le \beta = \frac{2 \times F_{DEV}}{BR} \le 10$$

The output of the FSK demodulator can be fed to the Bit Synchronizer (described in section 3.4.13), to provide the companion processor with a synchronous data stream in Continuous mode.

3.4.12. OOK Demodulator

The OOK demodulator performs a comparison of the RSSI output and a threshold value. Three different threshold modes are available, configured through bits *OokThreshType* in *RegOokPeak*.

The recommended mode of operation is the "Peak" threshold mode, illustrated in Figure 11:

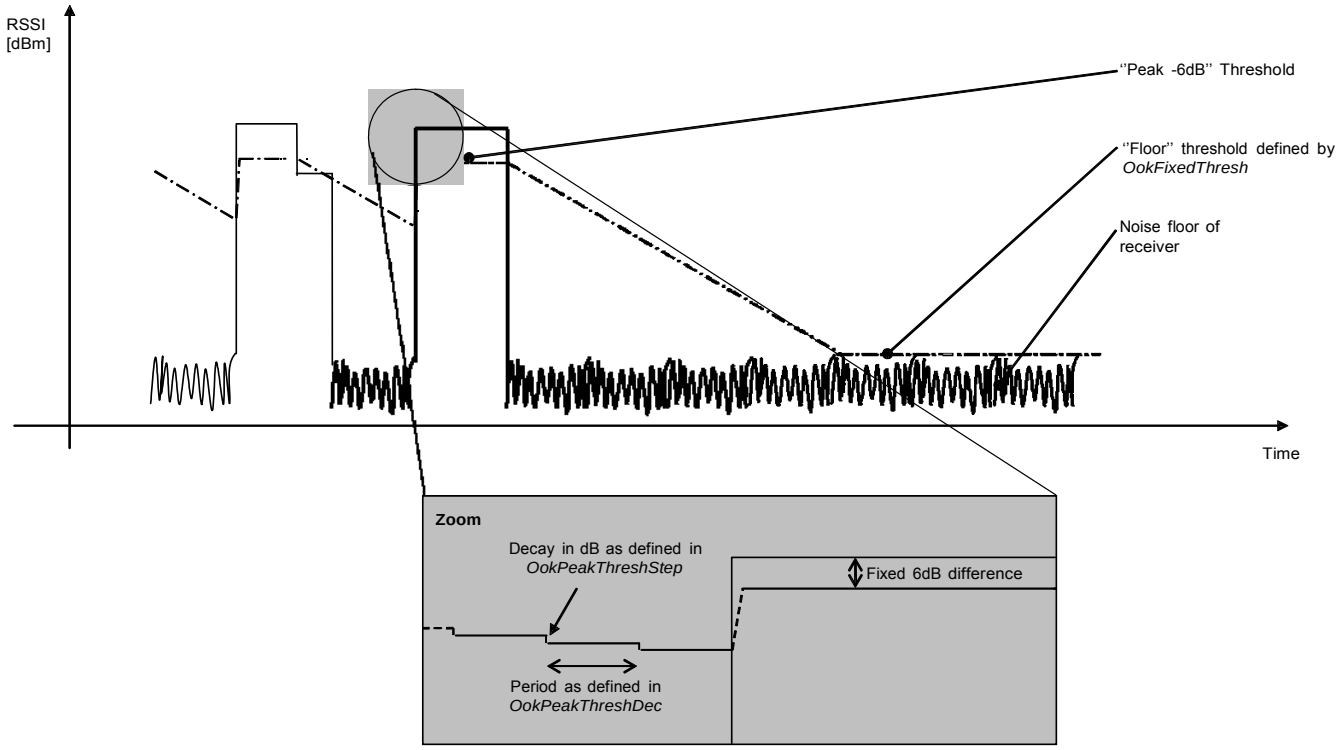

Figure 11. OOK Peak Demodulator Description

In peak threshold mode the comparison threshold level is the peak value of the RSSI, reduced by 6dB. In the absence of an input signal, or during the reception of a logical "0", the acquired peak value is decremented by one *OokPeakThreshStep* every *OokPeakThreshDec* period.

When the RSSI output is null for a long time (for instance after a long string of "0" received, or if no transmitter is present), the peak threshold level will continue falling until it reaches the "Floor Threshold", programmed in *OokFixedThresh*.

The default settings of the OOK demodulator lead to the performance stated in the electrical specification. However, in applications in which sudden signal drops are awaited during a reception, the three parameters should be optimized accordingly.

Tel: +86-755-82973805 Fax: +86-755-82973550 E-mail: sales@hoperf.com http://www.hoperf.com

3.4.12.1. Optimizing the Floor Threshold

OokFixedThresh determines the sensitivity of the OOK receiver, as it sets the comparison threshold for weak input signals (i.e. those close to the noise floor). Significant sensitivity improvements can be generated if configured correctly.

Note that the noise floor of the receiver at the demodulator input depends on:

- The noise figure of the receiver.
- The gain of the receive chain from antenna to base band.
- The matching - including SAW filter if any.
- The bandwidth of the channel filters.

It is therefore important to note that the setting of *OokFixedThresh* will be application dependant. The following procedure is recommended to optimize *OokFixedThresh*.

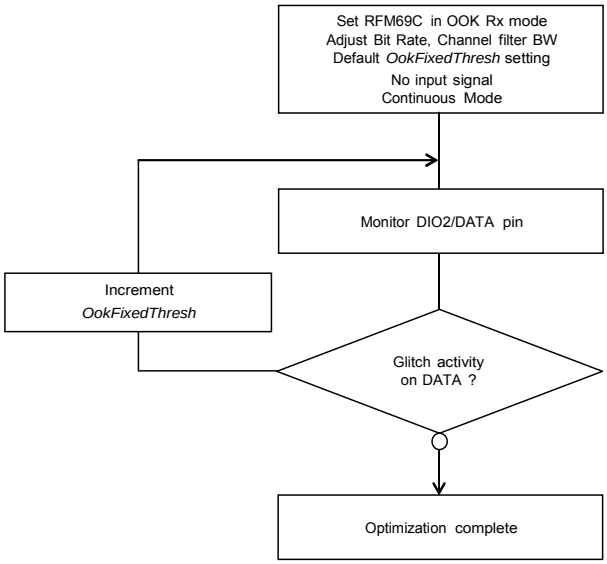

Figure 12. Floor Threshold Optimization

The new floor threshold value found during this test should be used for OOK reception with those receiver settings.

3.4.12.2. Optimizing OOK Demodulator for Fast Fading Signals

A sudden drop in signal strength can cause the bit error rate to increase. For applications where the expected signal drop can be estimated, the following OOK demodulator parameters *OokPeakThreshStep* and *OokPeakThreshDec* can be optimized as described below for a given number of threshold decrements per bit. Refer to *RegOokPeak* to access those settings.

3.4.12.3. Alternative OOK Demodulator Threshold Modes

In addition to the Peak OOK threshold mode, the user can alternatively select two other types of threshold detectors:

- Fixed Threshold: The value is selected through *OokFixedThresh*
- Average Threshold: Data supplied by the RSSI block is averaged, and this operation mode should only be used with DC-free encoded data.

Tel: +86-755-82973805 Fax: +86-755-82973550 E-mail: sales@hoperf.com http://www.hoperf.com

3.4.13. Bit Synchronizer

The Bit Synchronizer is a block that provides a clean and synchronized digital output, free of glitches. Its output is made available on pin DIO1/DCLK in Continuous mode and can be disabled through register settings. However, for optimum receiver performance its use when running Continuous mode is strongly advised.

The Bit Synchronizer is automatically activated in Packet mode. Its bit rate is controlled by *BitRateMsb* and *BitRateLsb* in *RegBitrate.*

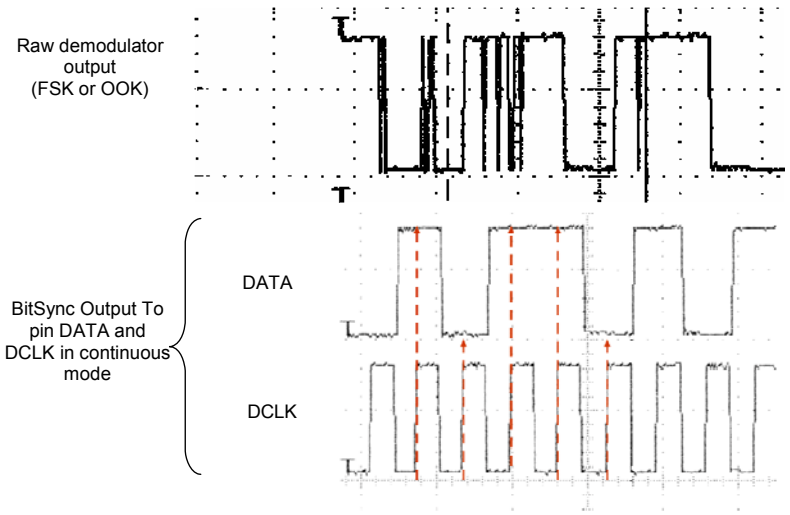

Figure 13. Bit Synchronizer Description

To ensure correct operation of the Bit Synchronizer, the following conditions have to be satisfied:

- A preamble (0x55 or 0xAA) of 12 bits is required for synchronization (from the *RxReady* interrupt)
- The subsequent payload bit stream must have at least one transition form '0' to '1' or '1' to '0 every 16 bits during data transmission
- The bit rate matching between the transmitter and the receiver must be better than 6.5 %.

Notes - If the Bit Rates of transmitter and receiver are known to be the same, the RFM69C will be able to receive an infinite unbalanced sequence (all "0s" or all "1s") with no restriction.

- If there is a difference in Bit Rate between Tx and Rx, the amount of adjacent bits at the same level that the BitSync can withstand can be estimated as follows:

$$NumberOfBits = \frac{1}{2} * \frac{BR}{\Delta BR}$$

- This implies approximately 6 consecutive unbalanced bytes when the Bit Rate precision is 1%, which is easily achievable (crystal tolerance is in the range of 50 to 100 ppm).

3.4.14. Frequency Error Indicator

This function provides information about the frequency error of the local oscillator (LO) compared with the carrier frequency of a modulated signal at the input of the receiver. When the FEI block is launched, the frequency error is measured and the signed result is loaded in *FeiValue* in *RegFei*, in 2's complement format. The time required for an FEI evaluation is 4 times the bit period.

Tel: +86-755-82973805 Fax: +86-755-82973550 E-mail: sales@hoperf.com http://www.hoperf.com

To ensure a proper behavior of the FEI:

- The operation must be done during the reception of preamble

The frequency error, in Hz, can be calculated with the following formula:

$$FEI = F_{STEP} \times FeiValue$$

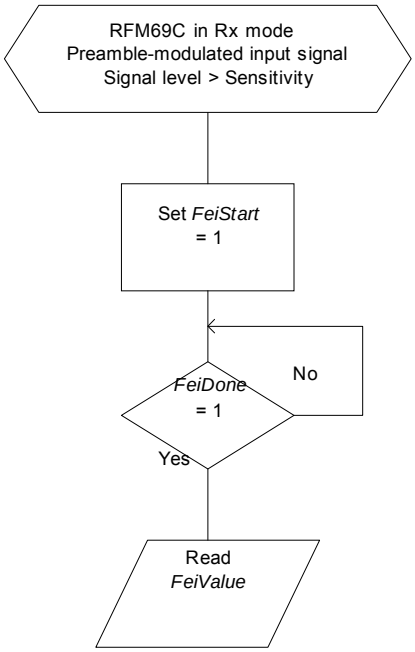

Figure 14. FEI Process

3.4.15. Automatic Frequency Correction

The AFC is based on the FEI block, and therefore the same input signal and receiver setting conditions apply. When the AFC procedure is done, *AfcValue* is directly subtracted to the register that defines the frequency of operation of the module, F_{RF}. The AFC can be launched:

- Each time the receiver is enabled, if *AfcAutoOn* = 1
- Upon user request, by setting bit *AfcStart* in *RegAfcFei*, if *AfcAutoOn* = 0

Tel: +86-755-82973805 Fax: +86-755-82973550 E-mail: sales@hoperf.com http://www.hoperf.com

When the AFC is automatically triggered (*AfcAutoOn* = 1), the user has the option to:

- Clear the former AFC correction value, if *AfcAutoClearOn* = 1
- Start the AFC evaluation from the previously corrected frequency. This may be useful in systems in which the LO keeps on drifting in the "same direction". Ageing compensation is a good example.

The RFM69C offers an alternate receiver bandwidth setting during the AFC phase, to accommodate large LO drifts. If the user considers that the received signal may be out of the receiver bandwidth, a higher channel filter bandwidth can be programmed in *RegAfcBw*, at the expense of the receiver noise floor, which will impact upon sensitivity.

3.4.16. Optimized Setup for Low Modulation Index Systems

- For wide band systems, where AFC is usually not required (XTAL inaccuracies do not typically impact the sensitivity), it is recommended to offset the LO frequency of the receiver to avoid desensitization. This can be simply done by modifying *Frf* in *RegFrfLsb*. A good rule of thumb is to offset the receiver's LO by 10% of the expected transmitter frequency deviation.
- For narrow band systems, it is recommended to perform AFC. The RFM69C has a dedicated AFC, enabled when *AfcLowBetaOn* in *RegAfcCtrl* is set to 1. A frequency offset, programmable through *LowBetaAfcOffset* in *RegTestAfc*, is added and is calculated as follows:

Offset = *LowBetaAfcOffset* x 488 Hz

The user should ensure that the programmed offset exceeds the DC canceller's cutoff frequency, set through *DccFreqAfc* in *RegAfcBw.*

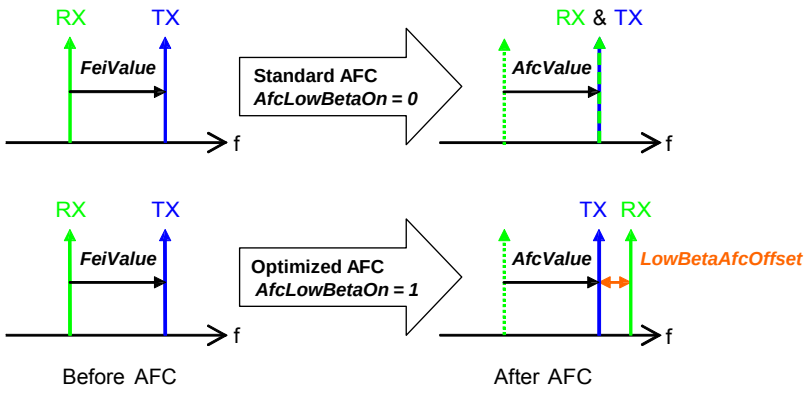

Figure 15. Optimized AFC (AfcLowBetaOn=1)

As shown on Figure 15, a standard AFC sequence uses the result of the FEI to correct the LO frequency and align both local oscillators. When the optimized AFC is enabled (*AfcLowBetaOn=1*), the receiver's LO is corrected by "*FeiValue* + *LowBetaAfcOffset*".

When the optimized AFC routine is enabled, the receiver startup time can be computed as follows (refer to section 4.2.3):

TS_RE_AGC&AFC (optimized AFC) = *Tana + 4.Tcf + 4.Tdcc + 3.Trssi + 2.Tafc + 2.Tpllafc*

Tel: +86-755-82973805 Fax: +86-755-82973550 E-mail: sales@hoperf.com http://www.hoperf.com

3.4.17. Temperature Sensor

When temperature is measured, the receiver ADC is used to digitize the sensor response. Most receiver blocks are disabled, and temperature measurement can only be triggered in Standby or Frequency Synthesizer modes.

The response of the temperature sensor is -1°C / Lsb. A CMOS temperature sensor is not accurate by nature, therefore it should be calibrated at ambient temperature for precise temperature readings.

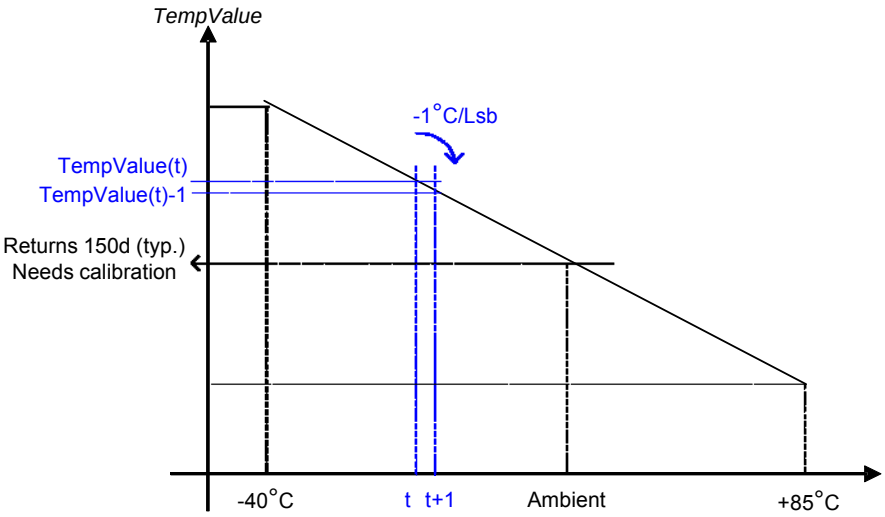

Figure 16. Temperature Sensor Response

It takes less than 100 microseconds for the RFM69C to evaluate the temperature (from setting *TempMeasStart* to 1 to *TempMeasRunning* reset).

3.4.18. Timeout Function

The RFM69C includes a Timeout function, which allows it to automatically shut-down the receiver after a receive sequence and therefore save energy.

- Timeout interrupt is generated *TimeoutRxStart x 16x Tbit* after switching to RX mode if *RssiThreshold* flag does not raise within this time frame
- Timeout interrupt is generated *TimeoutRssiThresh x 16 x Tbit* after *RssiThreshold* flag has been raised.

This timeout interrupt can be used to warn the companion processor to shut down the receiver and return to a lower power mode.

Tel: +86-755-82973805 Fax: +86-755-82973550 E-mail: sales@hoperf.com http://www.hoperf.com

4. Operating Modes

4.1. Basic Modes

The circuit can be set in 5 different basic modes which are described in Table 16.

By default, when switching from a mode to another one, the sub-blocks are woken up according to a pre-defined and optimized sequence. Alternatively, these operating modes can be selected directly by disabling the automatic sequencer (*SequencerOff* in *RegOpMode* = *1*).

Table 16 Basic Transceiver Modes

ListenOn **in *RegOpMode***	***Mode*** **in *RegOpMode***	**Selected mode**	**Enabled blocks**
0	0 0 0	Sleep Mode	None
0	0 0 1	Stand-by Mode	Top regulator and crystal oscillator
0	0 1 0	FS Mode	Frequency synthesizer
0	0 1 1	Transmit Mode	Frequency synthesizer and transmitter
0	1 0 0	Receive Mode	Frequency synthesizer and receiver
1	x	Listen Mode	See Listen Mode, section 4.3

4.2. Automatic Sequencer and Wake-Up Times

By default, when switching from one operating mode to another, the circuit takes care of the sequence of events in such a way that the transition timing is optimized. For example, when switching from Sleep mode to Transmit mode, the RFM69C goes first to Standby mode (XO started), then to frequency synthesizer mode, and finally, when the PLL has locked, to transmit mode. Entering transmit mode is also made according to a predefined sequence starting with the wake-up of the PA regulator before applying a ramp-up on the PA and generating the DCLK clock.

- The crystal oscillator wake-up time, TS_OSC, is directly related to the time for the crystal oscillator to reach its steady state. It depends notably on the crystal characteristics.
- The frequency synthesizer wake-up time, TS_FS, is directly related to the time needed by the PLL to reach its steady state. The signal PLL_LOCK, provided on an external pin, gives an indication of the lock status. It goes high when the PLL reaches its locking range.

Four specific cases can be highlighted:

- Transmitter Wake Up time from Sleep mode = *TS_OSC* + *TS_FS* + *TS_TR*
- Receiver Wake Up time from Sleep mode = *TS_OSC* + *TS_FS* + *TS_RE*
- Receiver Wake Up time from Sleep mode, AGC enabled = *TS_OSC* + *TS_FS* + *TS_RE_AGC*
- Receiver Wake Up time from Sleep mode, AGC and AFC enabled = *TS_OSC* + *TS_FS* + *TS_RE_AGC&AFC*

These timings are detailed in sections 4.2.1 and 4.2.3.

In applications where the target average power consumption, or the target startup time, do not require setting the RFM69C in the lowest power modes (Sleep or Standby), the respective timings *TS_OSC* and *TS_FS* in the former equations can be omitted.

Tel: +86-755-82973805 Fax: +86-755-82973550 E-mail: sales@hoperf.com http://www.hoperf.com

4.2.1. Transmitter Startup Time

The transmitter wake-up time, TS_TR, is given by the sequence controlled by the digital part. It is a pure digital delay which depends on the bit rate and the ramp-up time. In FSK mode, this time can be derived from the following equation.

$$TS_TR = 5\mu s + 1.25 \times PaRamp + \frac{1}{2} \times Tbit$$

where *PaRamp* is the ramp-up time programmed in *RegPaRamp* and *Tbit* is the bit time.

In OOK mode, this equation can be simplified to the following:

$$TS_TR = 5\mu s + \frac{1}{2} \times Tbit$$

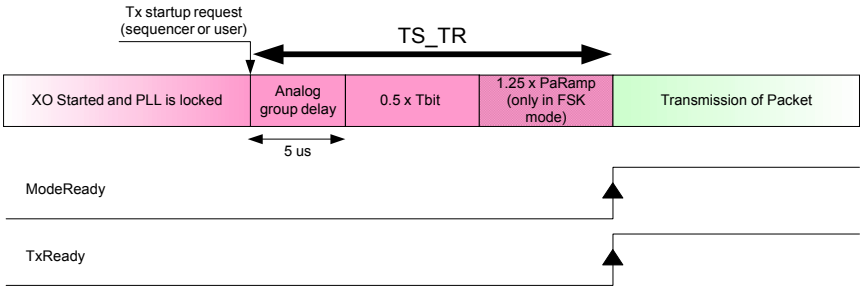

Figure 17. Tx Startup, FSK and OOK

4.2.2. Tx Start Procedure

As described in the former section, *ModeReady* and *TxReady* interrupts warn the uC that the transmitter is ready to transmit data

- In Continuous mode, the preamble bits preceding the payload can be applied on the DIO2/DATA pin immediately after any of these interrupts have fired. The DCLK signal, activated on pin DIO1/DCLK can also be used to start toggling the DATA pin, as described on Figure 30.
- In Packet mode, the RFM69C will automatically modulate the RF signal with preamble bytes as soon as *TxReady* or *ModeReady* happen. The actual packet transmission (starting with the number of preambles specified in *PreambleSize*) will start when the *TxStartCondition* is fulfilled.

4.2.3. Receiver Startup Time

It is highly recommended to use the built-in sequencer of the RFM69C, to optimize the delays when setting the module in receive mode. It guarantees the shortest startup times, hence the lowest possible energy usage, for battery operated systems.

The startup times of the receiver can be calculated from the following:

Tel: +86-755-82973805 Fax: +86-755-82973550 E-mail: sales@hoperf.com http://www.hoperf.com

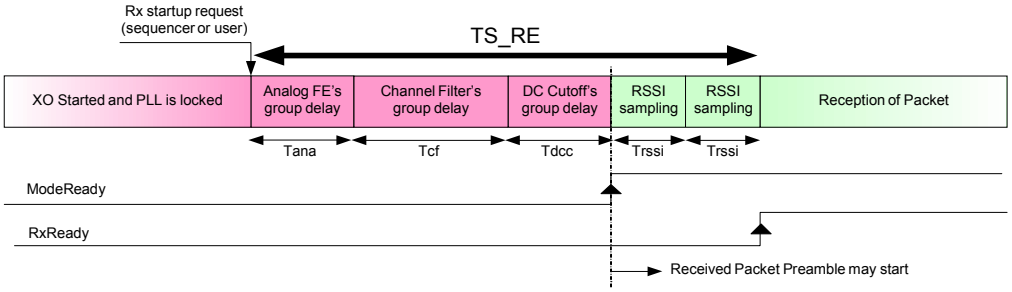

Figure 18. Rx Startup - No AGC, no AFC

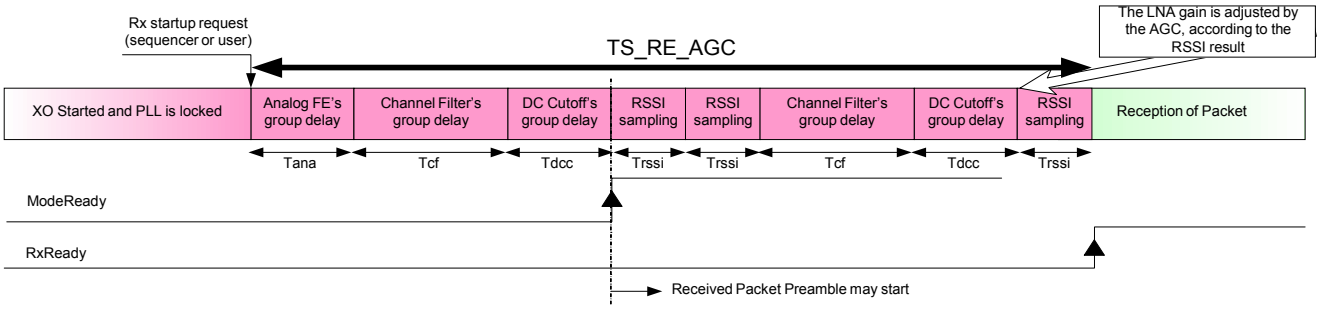

Figure 19. Rx Startup - AGC, no AFC

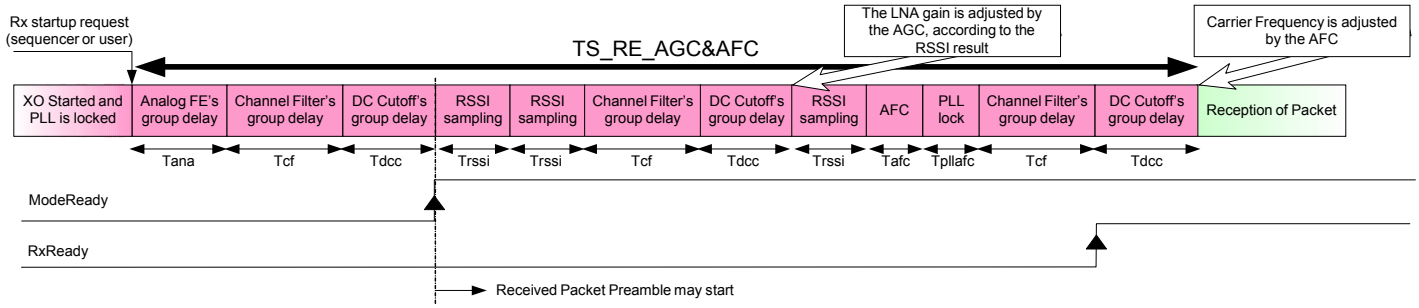

Figure 20. Rx Startup - AGC and AFC

The different timings shown above are as follows:

- Group delay of the analog front end: *Tana = 20 us*
- Channel filter's group delay in FSK mode: *Tcf = 21 / (4.RxBw)*
- Channel filter's group delay in OOK mode: *Tcf = 34 / (4.RxBw)*
- DC Cutoff's group delay: *Tdcc = max(8 , 2^(round(log2(8.RxBw.Tbit)+1)) / (4.RxBw)*
- PLL lock time after AFC adjustment: *Tpllafc = 5 / PLLBW (PLLBW = 300 kHz)*
- AFC sample time: *Tafc = 4 x Tbit* (also denoted TS_AFC in the general specification)
- RSSI sample time: *Trssi = 2 x int(4.RxBw.Tbit)/(4.RxBw)* (aka TS_RSSI)

Note The above timings represent maximum settling times, and shorter settling times may be observed in real cases

Tel: +86-755-82973805 Fax: +86-755-82973550 E-mail: sales@hoperf.com http://www.hoperf.com

4.2.4. Rx Start Procedure

As described in the former sections, the *RxReady* interrupt warns the uC that the receiver is ready.

- In Continuous mode with Bit Synchronizer, the receiver will start locking its Bit Synchronizer on a minimum or 12 bits of received preamble (see section 3.4.13 for details), before the reception of correct Data, or Sync Word (if enabled) can occur.
- In Continuous mode without Bit Synchronizer, valid data will be available on DIO2/DATA right after the *RxReady* interrupt.
- In Packet mode, the receiver will start locking its Bit Synchronizer on a minimum or 12 bits of received preamble (see section 3.4.13 for details), before the reception of correct Data, or Sync Word (if enabled) can occur.

4.2.5. Optimized Frequency Hopping Sequences

In a frequency hopping-like application, it is required to turn off the transmitter when hopping from one channel to another, to avoid spectral splatter and obtain the best spectral purity.

- Transmitter hop from Ch A to Ch B: it is advised to step through the Rx mode:
  (0) RFM69C is in Tx mode in Ch A
  (1) Program the RFM69C in Rx mode
  (2) Change the carrier frequency in the *RegFrf* registers
  (3) Turn the transceiver back to Tx mode
  (4) Respect the Tx start procedure, described in section 4.2.2

- Receiver hop from Ch A to Ch B:
  (0) RFM69C is in Rx mode in Ch A
  (1) Change the carrier frequency in the *RegFrf* registers
  (2) Program the RFM69C in FS mode
  (3) Turn the transceiver back to Rx mode
  (4) Respect the Rx start procedure, described in section 4.2.4

Note all sequences described above are assuming that the sequencer is turned on (SequencerOff=0 in RegOpMode).

Tel: +86-755-82973805 Fax: +86-755-82973550 E-mail: sales@hoperf.com http://www.hoperf.com

4.3. Listen Mode

The circuit can be set to Listen mode, by setting *ListenOn* in *RegOpMode* to 1 while in Standby mode. In this mode, RFM69C spends most of the time in Idle mode, during which only the RC oscillator runs. Periodically the receiver is woken up and listens for an RF signal. If a wanted signal is detected, the receiver is kept on and the data is demodulated.

Otherwise, if a wanted signal hasn't been detected after a pre-defined period of time, the receiver is disabled until the next time period.

This periodical Rx wake-up requirement is very common in low power applications. On RFM69C it is handled locally by the Listen mode block without using uC resources or energy.

The simplified timing diagram of this procedure is illustrated in Figure 21.

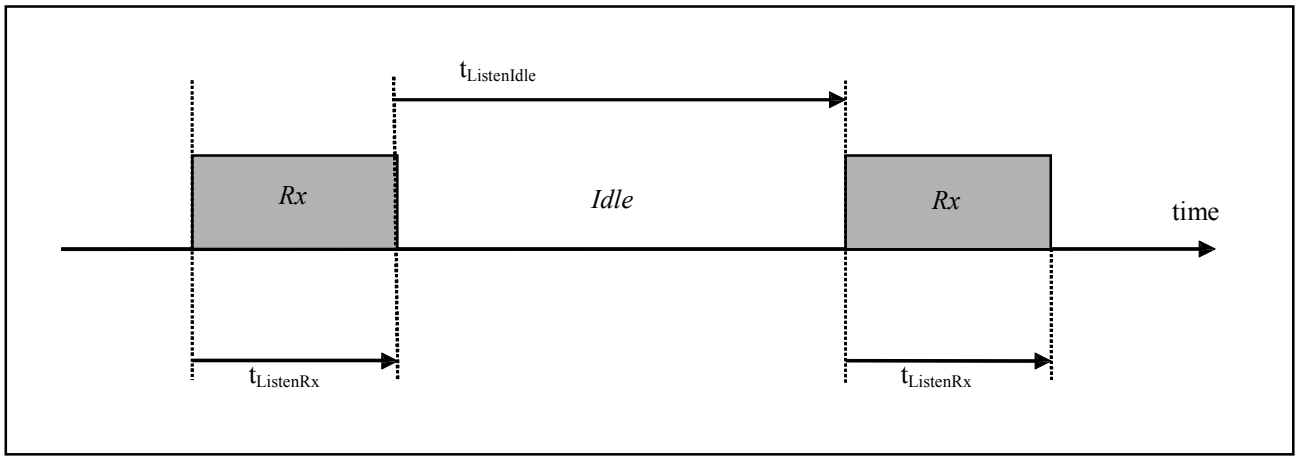

Figure 21. Listen Mode Sequence (no wanted signal is received)

4.3.1. Timings

The duration of the Idle phase is given by $t_{ListenIdle}$. The time during which the receiver is on and waits for a signal is given by $t_{ListenRx}$. $t_{ListenRx}$ includes the wake-up time of the receiver, described in section 4.2.3. This duration can be programmed in the configuration registers via the serial interface.

Both time periods $t_{ListenRx}$ and $t_{ListenIdle}$ (denoted $t_{ListenX}$ in the following text) are fixed by two parameters from the configuration register and are calculated as follows:

$$t_{ListenX} = ListenCoefX * ListenResolX$$

where *ListenResolX* is the Rx or Idle resolution and is independently programmable on three values (64us, 4.1ms or 262ms), whereas *ListenCoefX* is an integer between 1 and 255. All parameters are located in *RegListen* registers.

The timing ranges are tabulated in Table 17 below.

Table 17 Range of Durations in Listen Mode

ListenResolX	**Min duration (*ListenCoef* = 1)**	**Max duration (*ListenCoef* = 255)**
01	64 us	16 ms
10	4.1 ms	1.04 s
11	0.26 s	67 s

Tel: +86-755-82973805 Fax: +86-755-82973550 E-mail: sales@hoperf.com http://www.hoperf.com

Notes - the accuracy of the typical timings given in Table 17 will depend in the RC oscillator calibration

- RC oscillator calibration is required, and must be performed at power up. See section 4.3.5 for details

4.3.2. Criteria

The criteria taken for detecting a wanted signal and hence deciding to maintain the receiver on is defined by *ListenCriteria* in *RegListen1.*

Table 18 Signal Acceptance Criteria in Listen Mode

ListenCriteria	Input Signal Power >= *RssiThreshold*	*SyncAddressMatch*
0	Required	Not Required
1	Required	Required

4.3.3. End of Cycle Actions

The action taken after detection of a packet, is defined by *ListenEnd* in *RegListen3*, as described in the table below.

Table 19 End of Listen Cycle Actions

ListenEnd	Description
00	Module stays in Rx mode. Listen mode stops and must be disabled.
01	Module stays in Rx mode until *PayloadReady* or *Timeout* interrupt occurs. It then goes to the mode defined by *Mode*. Listen mode stops and must be disabled.
10	Module stays in Rx mode until *PayloadReady* or *Timeout* interrupt occurs. Listen mode then resumes in Idle state. FIFO content is lost at next Rx wakeup.

Tel: +86-755-82973805 Fax: +86-755-82973550 E-mail: sales@hoperf.com http://www.hoperf.com

Upon detection of a valid packet, the sequencing is altered, as shown below:

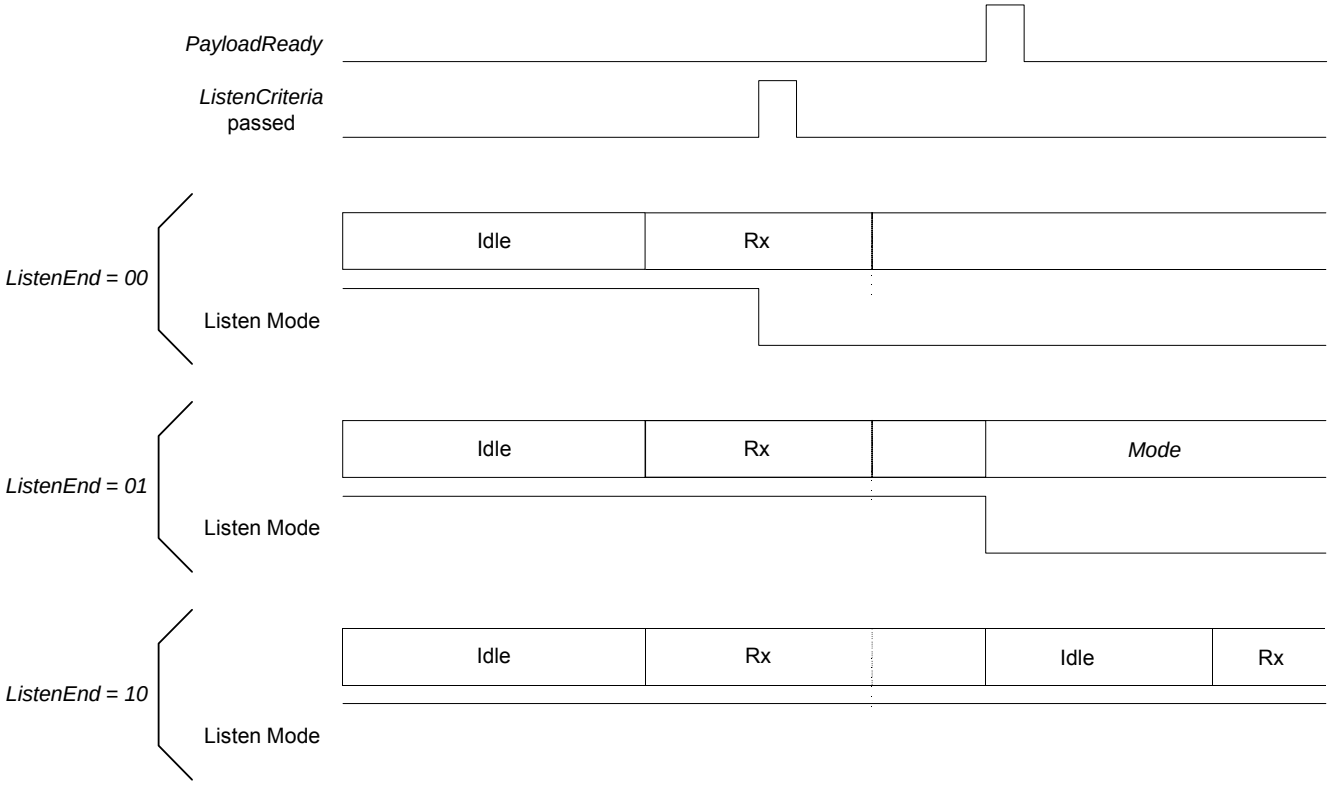

Figure 22. Listen Mode Sequence (wanted signal is received)

4.3.4. Stopping Listen Mode

To abort Listen mode operation, the following procedure must be respected:

- Program *RegOpMode* with *ListenOn*=0, *ListenAbort*=1, and the desired setting for the *Mode* bits (Sleep, Stdby, FS, Rx or Tx mode) in a single SPI access
- Program *RegOpMode* with *ListenOn*=0, *ListenAbort*=0, and the desired setting for the *Mode* bits (Sleep, Stdby, FS, Rx or Tx mode) in a second SPI access

4.3.5. RC Timer Accuracy

All timings of the Listen Mode rely on the accuracy of the internal low-power RC oscillator. This oscillator is automatically calibrated at the device power-up, and it is a user-transparent process.

For applications enduring large temperature variations, and for which the power supply is never removed, RC calibration can be performed upon user request. *RcCalStart* in *RegOsc1* can be used to trigger this calibration, and the flag *RcCalDone* will be set automatically when the calibration is over.

Tel: +86-755-82973805 Fax: +86-755-82973550 E-mail: sales@hoperf.com http://www.hoperf.com

4.4. AutoModes

Automatic modes of packet handler can be enabled by configuring the related parameters in *RegAutoModes*.

The intermediate mode of the module is called *IntermediateMode* and the enter and exit conditions to/from this intermediate mode can be configured through the parameters *EnterCondition* & *ExitCondition*.

The enter and exit conditions cannot be used independently of each other i.e. both should be enabled at the same time.

The initial and the final state is the one configured in *Mode* in *RegOpMode*. The initial & final states can be different by configuring the modes register while the module is in intermediate mode. The pictorial description of the auto modes is shown
below.

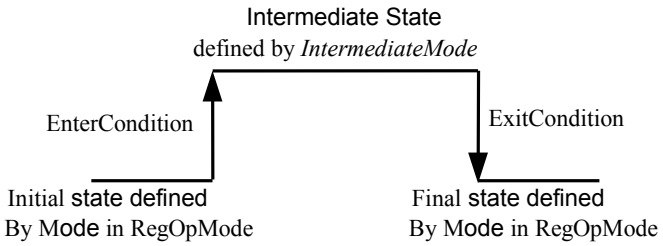

Figure 23. Auto Modes of Packet Handler

Some typical examples of AutoModes usage are described below:

- Automatic transmission (AutoTx) : *Mode* = Sleep, *IntermediateMode* = Tx, *EnterCondition* = *FifoLevel*, *ExitCondition* = *PacketSent*
- Automatic reception (AutoRx) : *Mode* = Rx, *IntermediateMode* = Sleep, *EnterCondition* = *CrcOk*, *ExitCondition* = falling edge of *FifoNotEmpty*
- Automatic reception of acknowledge (AutoRxAck): *Mode* = Tx, *IntermediateMode* = Rx, *EnterCondition* = *PacketSent*, *ExitCondition* = *CrcOk*
- ...

Tel: +86-755-82973805 Fax: +86-755-82973550 E-mail: sales@hoperf.com http://www.hoperf.com

5. Data Processing

5.1. Overview

5.1.1. Block Diagram

Figure below illustrates the RFM69C data processing circuit. Its role is to interface the data to/from the modulator/ demodulator and the uC access points (SPI and DIO pins). It also controls all the configuration registers.

The circuit contains several control blocks which are described in the following paragraphs.

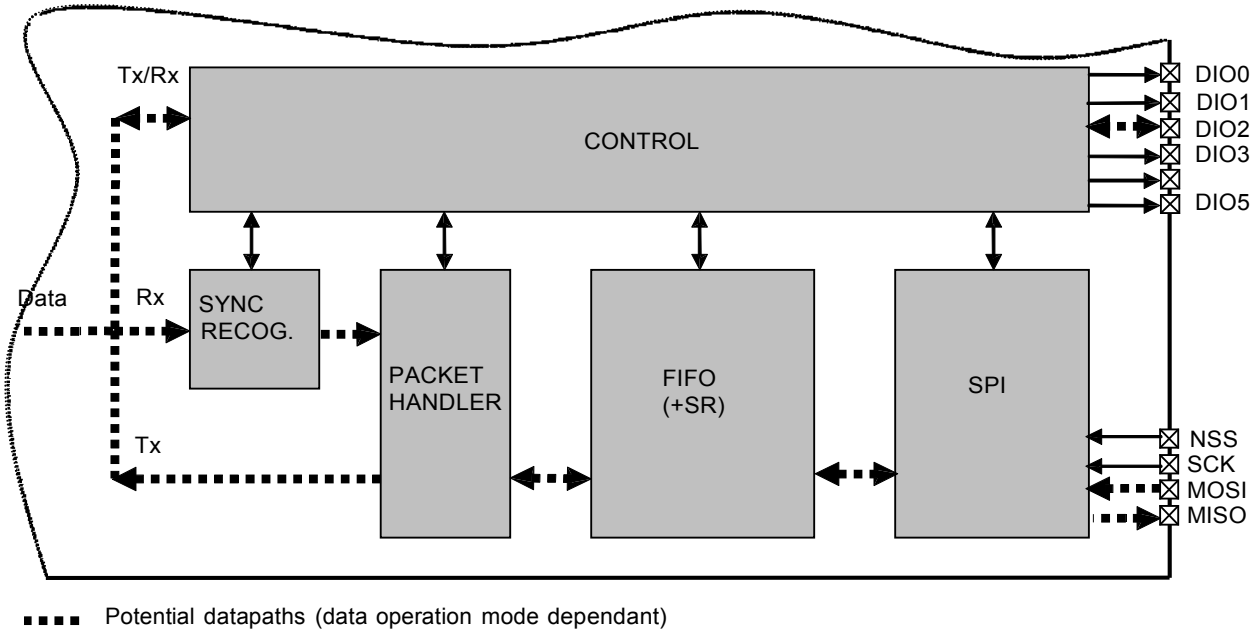

Figure 24. RFM69C Data Processing Conceptual View

The RFM69C implements several data operation modes, each with their own data path through the data processing section. Depending on the data operation mode selected, some control blocks are active whilst others remain disabled.

5.1.2. Data Operation Modes

The RFM69C has two different data operation modes selectable by the user:

- Continuous mode: each bit transmitted or received is accessed in real time at the DIO2/DATA pin. This mode may be used if adequate external signal processing is available.
- Packet mode (recommended): user only provides/retrieves payload bytes to/from the FIFO. The packet is automatically built with preamble, Sync word, and optional AES, CRC, and DC-free encoding schemes The reverse operation is performed in reception. The uC processing overhead is hence significantly reduced compared to Continuous mode. Depending on the optional features activated (CRC, AES, etc) the maximum payload length is limited to FIFO size, 255 bytes or unlimited.

Each of these data operation modes is described fully in the following sections.

Tel: +86-755-82973805 Fax: +86-755-82973550 E-mail: sales@hoperf.com http://www.hoperf.com

5.2. Control Block Description

5.2.1. SPI Interface

The SPI interface gives access to the configuration register via a synchronous full-duplex protocol corresponding to CPOL = 0 and CPHA = 0 in Motorola/Freescale nomenclature. Only the slave side is implemented.

Three access modes to the registers are provided:

- SINGLE access: an address byte followed by a data byte is sent for a write access whereas an address byte is sent and a read byte is received for the read access. The NSS pin goes low at the begin of the frame and goes high after the data byte.
- BURST access: the address byte is followed by several data bytes. The address is automatically incremented internally between each data byte. This mode is available for both read and write accesses. The NSS pin goes low at the beginning of the frame and stay low between each byte. It goes high only after the last byte transfer.
- FIFO access: if the address byte corresponds to the address of the FIFO, then succeeding data byte will address the FIFO. The address is not automatically incremented but is memorized and does not need to be sent between each data byte. The NSS pin goes low at the beginning of the frame and stay low between each byte. It goes high only after the last byte transfer.

Figure below shows a typical SPI single access to a register.

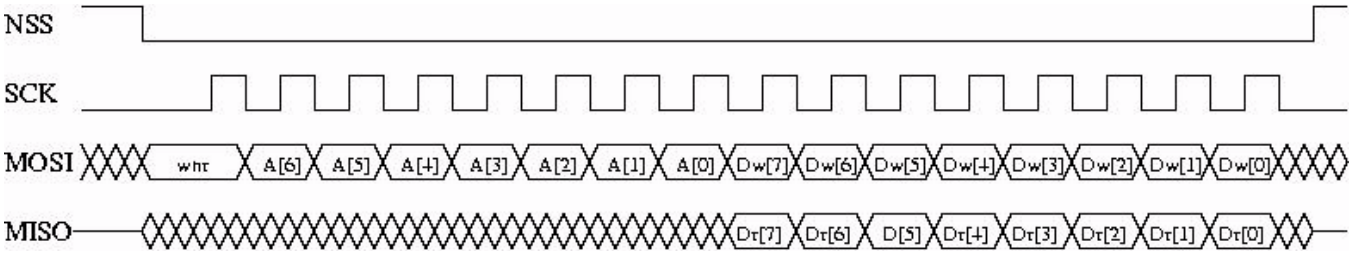

Figure 25. SPI Timing Diagram (single access)

MOSI is generated by the master on the falling edge of SCK and is sampled by the slave (i.e. this SPI interface) on the rising edge of SCK. MISO is generated by the slave on the falling edge of SCK.

A transfer always starts by the NSS pin going low. MISO is high impedance when NSS is high.

The first byte is the address byte. It is made of:

- wnr bit, which is 1 for write access and 0 for read access
- 7 bits of address, MSB first

The second byte is a data byte, either sent on MOSI by the master in case of a write access, or received by the master on MISO in case of read access. The data byte is transmitted MSB first.

Proceeding bytes may be sent on MOSI (for write access) or received on MISO (for read access) without rising NSS and re-sending the address. In FIFO mode, if the address was the FIFO address then the bytes will be written / read at the FIFO address. In Burst mode, if the address was not the FIFO address, then it is automatically incremented at each new byte received.

Tel: +86-755-82973805 Fax: +86-755-82973550 E-mail: sales@hoperf.com http://www.hoperf.com

The frame ends when NSS goes high. The next frame must start with an address byte. The SINGLE access mode is actually a special case of FIFO / BURST mode with only 1 data byte transferred.

During the write access, the byte transferred from the slave to the master on the MISO line is the value of the written register before the write operation.

5.2.2. FIFO

5.2.2.1. Overview and Shift Register (SR)

In packet mode of operation, both data to be transmitted and that has been received are stored in a configurable FIFO (First In First Out) device. It is accessed via the SPI interface and provides several interrupts for transfer management.

The FIFO is 1 byte wide hence it only performs byte (parallel) operations, whereas the demodulator functions serially. A shift register is therefore employed to interface the two devices. In transmit mode it takes bytes from the FIFO and outputs them serially (MSB first) at the programmed bit rate to the modulator. Similarly, in Rx the shift register gets bit by bit data from the demodulator and writes them byte by byte to the FIFO. This is illustrated in figure below.

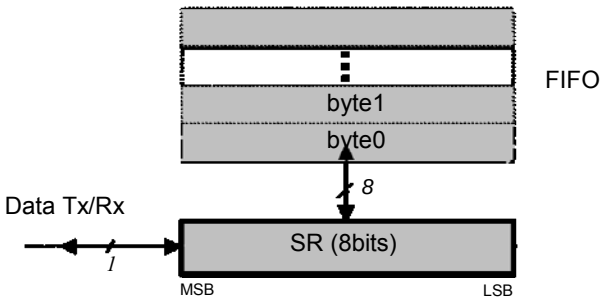

Figure 26. FIFO and Shift Register (SR)

Note *When switching to Sleep mode, the FIFO can only be used once the ModeReady flag is set (quasi immediate from all modes except from Tx)*

5.2.2.2. Size

The FIFO size is fixed to 66 bytes.

5.2.2.3. Interrupt Sources and Flags

- FifoNotEmpty: FifoNotEmpty interrupt source is low when byte 0, i.e. whole FIFO, is empty. Otherwise it is high. Note that when retrieving data from the FIFO, FifoNotEmpty is updated on NSS falling edge, i.e. when FifoNotEmpty is updated to low state the currently started read operation must be completed. In other words, FifoNotEmpty state must be checked after each read operation for a decision on the next one (FifoNotEmpty = 1: more byte(s) to read; FifoNotEmpty = 0: no more byte to read).
- FifoFull: FifoFull interrupt source is high when the last FIFO byte, i.e. the whole FIFO, is full. Otherwise it is low.
- FifoOverrunFlag: FifoOverrunFlag is set when a new byte is written by the user (in Tx or Standby modes) or the SR (inRx mode) while the FIFO is already full. Data is lost and the flag should be cleared by writing a 1, note that the FIFO will also be cleared.
- PacketSent: PacketSent interrupt source goes high when the SR's last bit has been sent.
- FifoLevel: Threshold can be programmed by FifoThreshold in RegFifoThresh. Its behavior is illustrated in figure below.

Tel: +86-755-82973805 Fax: +86-755-82973550 E-mail: sales@hoperf.com http://www.hoperf.com

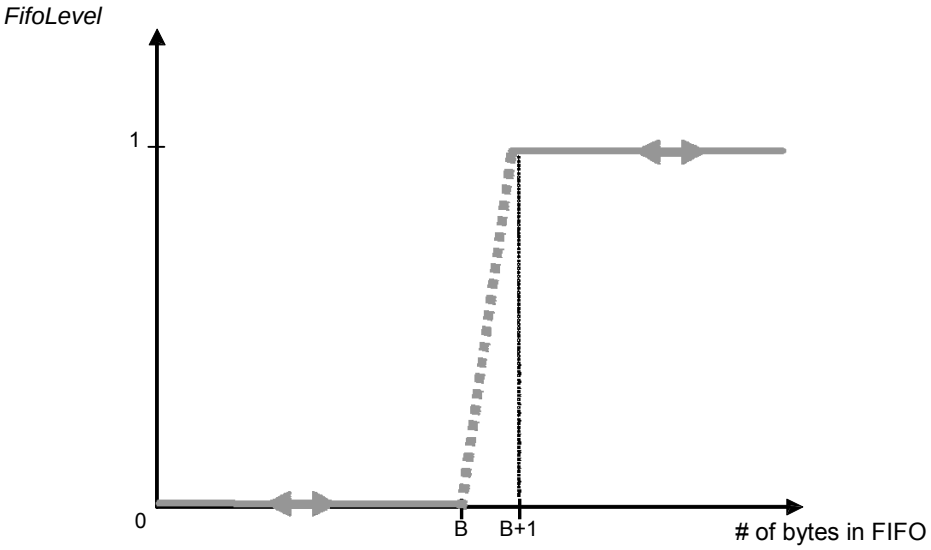

Figure 27. FifoLevel IRQ Source Behavior

Note - FifoLevel interrupt is updated only after a read or write operation on the FIFO. Thus the interrupt cannot be dynamically updated by only changing the FifoThreshold parameter

- FifoLevel interrupt is valid as long as FifoFull does not occur. An empty FIFO will restore its normal operation

5.2.2.4. FIFO Clearing

Table below summarizes the status of the FIFO when switching between different modes

Table 20 Status of FIFO when Switching Between Different Modes of the Module

From	To	FIFO status	Comments
Stdby	Sleep	Not cleared	
Sleep	Stdby	Not cleared	
Stdby/Sleep	Tx	Not cleared	To allow the user to write the FIFO in Stdby/Sleep before Tx
Stdby/Sleep	Rx	Cleared	
Rx	Tx	Cleared	
Rx	Stdby/Sleep	Not cleared	To allow the user to read FIFO in Stdby/Sleep mode after Rx
Tx	Any	Cleared	

5.2.3. Sync Word Recognition

5.2.3.1. Overview

Sync word recognition (also called Pattern recognition) is activated by setting *SyncOn* in *RegSyncConfig*. The bit synchronizer must also be activated in continuous mode (automatically done in Packet mode) .

The block behaves like a shift register; it continuously compares the incoming data with its internally programmed Sync word and sets *SyncAddressMatch* when a match is detected. This is illustrated in Figure 28 below.

Tel: +86-755-82973805 Fax: +86-755-82973550 E-mail: sales@hoperf.com http://www.hoperf.com

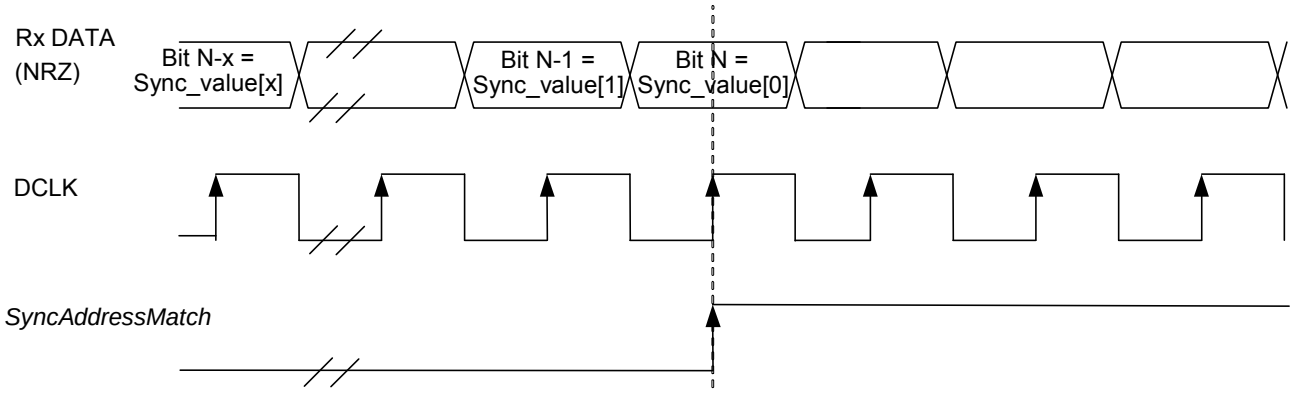

Figure 28. Sync Word Recognition

During the comparison of the demodulated data, the first bit received is compared with bit 7 (MSB) of *RegSyncValue1* and the last bit received is compared with bit 0 (LSB) of the last byte whose address is determined by the length of the Sync word.

When the programmed Sync word is detected the user can assume that this incoming packet is for the node and can be processed accordingly.

SyncAddressMatch is cleared when leaving Rx or FIFO is emptied.

5.2.3.2. Configuration

- Size: Sync word size can be set from 1 to 8 bytes (i.e. 8 to 64 bits) via SyncSize in RegSyncConfig. In Packet mode this field is also used for Sync word generation in Tx mode.
- Error tolerance: The number of errors tolerated in the Sync word recognition can be set from 0 to 7 bits to via SyncTol.
- Value: The Sync word value is configured in SyncValue(63:0). In Packet mode this field is also used for Sync word generation in Tx mode.

Note SyncValue choices containing 0x00 bytes are not allowed

5.2.4. Packet Handler

The packet handler is the block used in Packet mode. Its functionality is fully described in section 5.5.

5.2.5. Control

The control block configures and controls the full module's behavior according to the settings programmed in the configuration registers.

5.3. Digital IO Pins Mapping

Six general purpose IO pins are available on the RFM69C, and their configuration in Continuous or Packet mode is controlled through *RegDioMapping1* and *RegDioMapping2.*

Tel: +86-755-82973805 Fax: +86-755-82973550 E-mail: sales@hoperf.com http://www.hoperf.com

5.3.1. DIO Pins Mapping in Continuous Mode

Table 21 DIO Mapping, Continuous Mode

Mode	Diox Mapping	DIO5	DIO3	DIO2	DIO1	DIO0
Sleep	00	-	-	-	-	-
	01	-	-	-	-	-
	10	-	AutoMode	-	-	-
	11	ModeReady	-	-	-	ModeReady
Stdby	00	ClkOut	-	-	-	-
	01	-	-	-	-	-
	10	-	AutoMode	-	-	-
	11	ModeReady	-	-	-	ModeReady
FS	00	ClkOut	-	-	-	PllLock
	01	-	-	-	-	-
	10	-	AutoMode	-	-	-
	11	ModeReady	-	-	PllLock	ModeReady
Rx	00	ClkOut	Rssi	Data	Dclk	SyncAddress
	01	Rssi	RxReady	Data	RxReady	Timeout
	10	-	AutoMode	Data	-	Rssi
	11	ModeReady	Timeout	Data	SyncAddress	ModeReady
Tx	00	ClkOut	TxReady	Data	Dclk	PllLock
	01	ClkOut	TxReady	Data	TxReady	TxReady
	10	-	AutoMode	Data	-	-
	11	ModeReady	TxReady	Data	PllLock	ModeReady

5.3.2. DIO Pins Mapping in Packet Mode

Table 22 DIO Mapping, Packet Mode

Mode	Diox Mapping	DIO5	DIO3	DIO2	DIO1	DIO0
Sleep	00	-	FifoFull	FifoNotEmpty	FifoLevel	-
	01	-	-	-	FifoFull	-
	10	-	-	-	FifoNotEmpty	-
	11	ModeReady	-	AutoMode	-	-
Stdby	00	ClkOut	FifoFull	FifoNotEmpty	FifoLevel	-
	01	-	-	-	FifoFull	-
	10	-	-	-	FifoNotEmpty	-
	11	ModeReady	-	AutoMode	-	-
FS	00	ClkOut	FifoFull	FifoNotEmpty	FifoLevel	-
	01	-	-	-	FifoFull	-
	10	-	-	-	FifoNotEmpty	-
	11	ModeReady	PllLock	AutoMode	PllLock	PllLock
Rx	00	ClkOut	FifoFull	FifoNotEmpty	FifoLevel	CrcOk
	01	Data	Rssi	Data	FifoFull	PayloadReady
	10	-	SyncAddress	-	FifoNotEmpty	SyncAddress
	11	ModeReady	PllLock	AutoMode	Timeout	Rssi
Tx	00	ClkOut	FifoFull	FifoNotEmpty	FifoLevel	PacketSent
	01	Data	TxReady	Data	FifoFull	TxReady
	10	-	-	-	FifoNotEmpty	-
	11	ModeReady	PllLock	AutoMode	PllLock	PllLock

Note Received Data is only shown on the Data signal between RxReady and PayloadReady's rising edges

Tel: +86-755-82973805 Fax: +86-755-82973550 E-mail: sales@hoperf.com http://www.hoperf.com

5.4. Continuous Mode

5.4.1. General Description

As illustrated in Figure 29, in Continuous mode the NRZ data to (from) the (de)modulator is directly accessed by the uC on the bidirectional DIO2/DATA pin. The FIFO and packet handler are thus inactive.

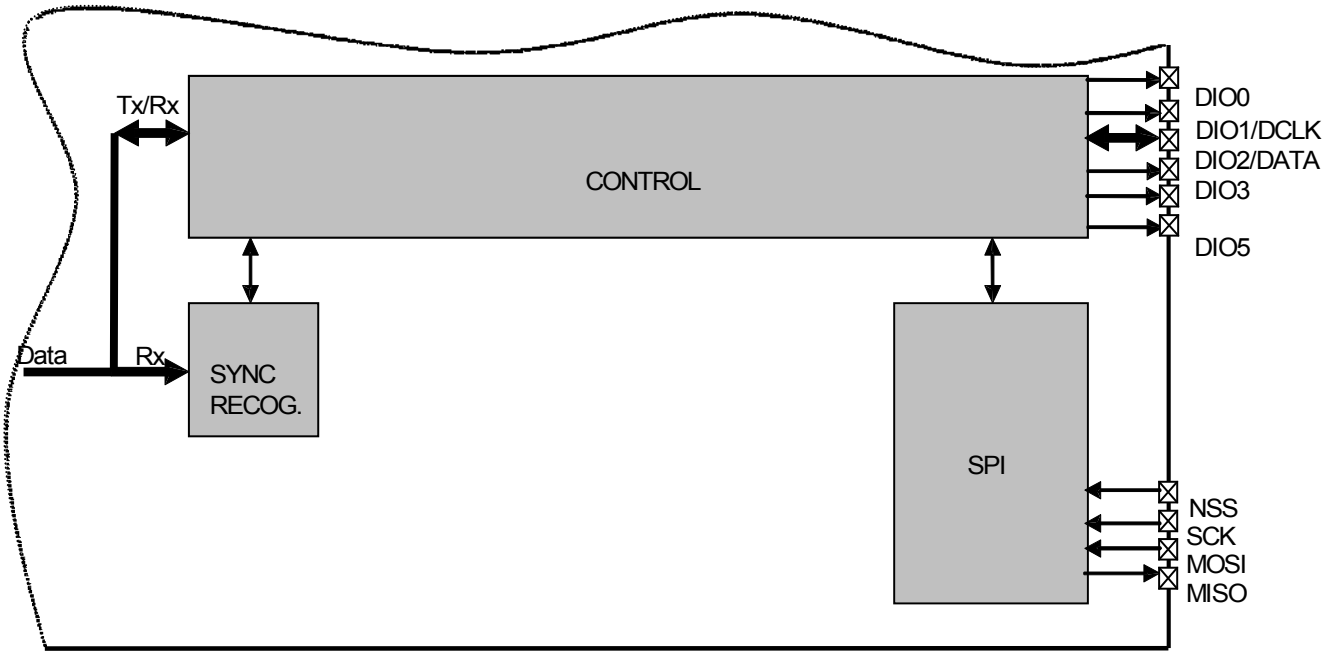

Figure 29. Continuous Mode Conceptual View

5.4.2. Tx Processing

In Tx mode, a synchronous data clock for an external uC is provided on DIO1/DCLK pin. Clock timing with respect to the data is illustrated in Figure 30. DATA is internally sampled on the rising edge of DCLK so the uC can change logic state anytime outside the grayed out setup/hold zone.

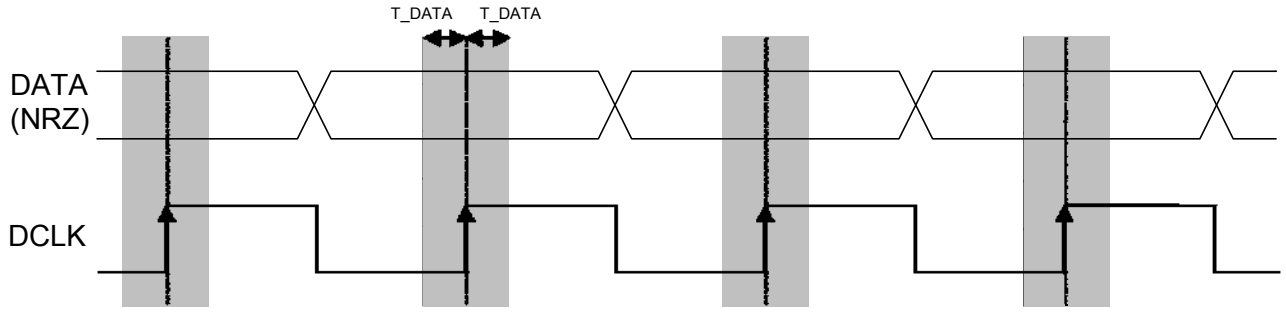

Figure 30. Tx Processing in Continuous Mode

Note the use of DCLK is required when the modulation shaping is enabled (see section 3.3.5).

Tel: +86-755-82973805 Fax: +86-755-82973550 E-mail: sales@hoperf.com http://www.hoperf.com

5.4.3. Rx Processing

If the bit synchronizer is disabled, the raw demodulator output is made directly available on DATA pin and no DCLK signal is provided.

Conversely, if the bit synchronizer is enabled, synchronous cleaned data and clock are made available respectively on DIO2/DATA and DIO1/DCLK pins. DATA is sampled on the rising edge of DCLK and updated on the falling edge as illustrated below.

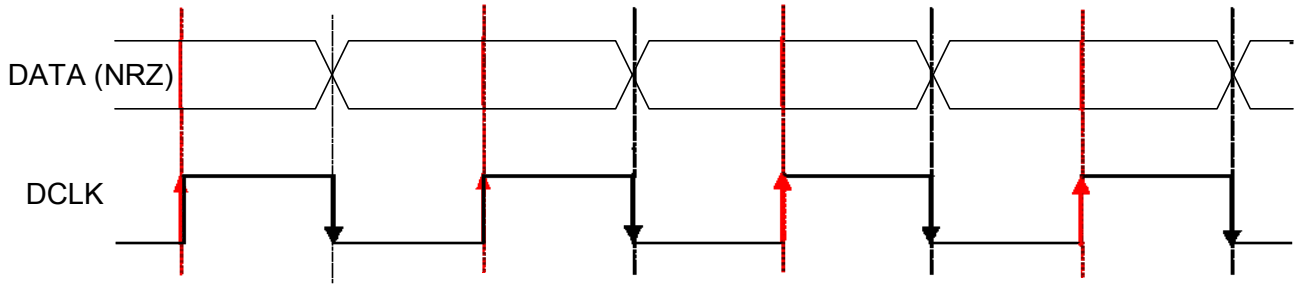

Figure 31. Rx Processing in Continuous Mode

Note in Continuous mode it is always recommended to enable the bit synchronizer to clean the DATA signal even if the DCLK signal is not used by the uC (bit synchronizer is automatically enabled in Packet mode).

5.5. Packet Mode

5.5.1. General Description

In Packet mode the NRZ data to (from) the (de)modulator is not directly accessed by the uC but stored in the FIFO and accessed via the SPI interface.

In addition, the RFM69C packet handler performs several packet oriented tasks such as Preamble and Sync word generation, CRC calculation/check, whitening/dewhitening of data, Manchester encoding/decoding, address filtering, AES encryption/decryption, etc. This simplifies software and reduces uC overhead by performing these repetitive tasks within the RF module itself.

Another important feature is ability to fill and empty the FIFO in Sleep/Stdby mode, ensuring optimum power consumption and adding more flexibility for the software.

Tel: +86-755-82973805 Fax: +86-755-82973550 E-mail: sales@hoperf.com http://www.hoperf.com

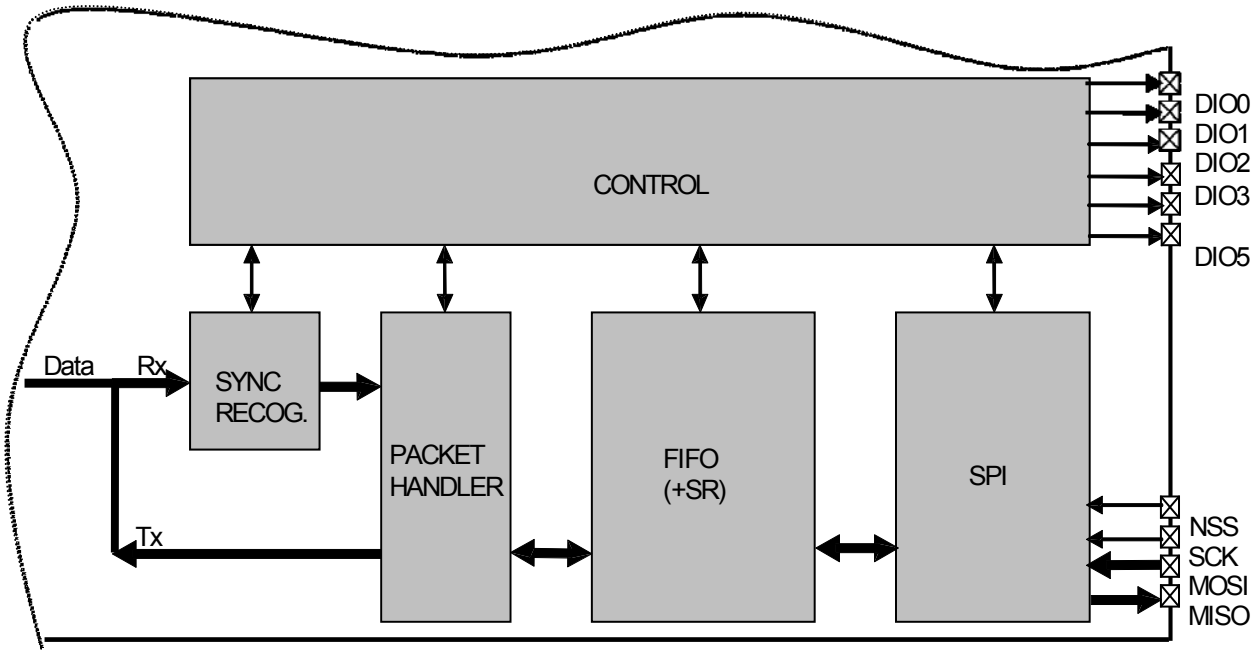

Figure 32. Packet Mode Conceptual View

Note The Bit Synchronizer is automatically enabled in Packet mode.

5.5.2. Packet Format

5.5.2.1. Fixed Length Packet Format

Fixed length packet format is selected when bit *PacketFormat* is set to 0 and *PayloadLength* is set to any value greater than 0.

In applications where the packet length is fixed in advance, this mode of operation may be of interest to minimize RF overhead (no length byte field is required). All nodes, whether Tx only, Rx only, or Tx/Rx should be programmed with the same packet length value.

The length of the payload is limited to 255 bytes if AES is not enabled else the message is limited to 64 bytes (i.e. max 65 bytes payload if Address byte is enabled).

The length programmed in *PayloadLength* relates only to the payload which includes the message and the optional address byte. In this mode, the payload must contain at least one byte, i.e. address or message byte.

An illustration of a fixed length packet is shown below. It contains the following fields:

- Preamble (1010...)
- Sync word (Network ID)
- Optional Address byte (Node ID)
- Message data
- Optional 2-bytes CRC checksum

Tel: +86-755-82973805 Fax: +86-755-82973550 E-mail: sales@hoperf.com http://www.hoperf.com

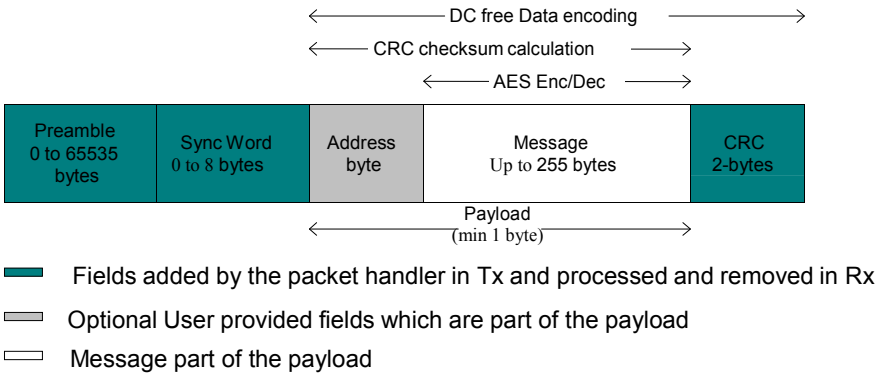

Figure 33. Fixed Length Packet Format

5.5.2.2. Variable Length Packet Format

Variable length packet format is selected when bit *PacketFormat* is set to 1.

This mode is useful in applications where the length of the packet is not known in advance and can vary over time. It is then necessary for the transmitter to send the length information together with each packet in order for the receiver to operate properly.

In this mode the length of the payload, indicated by the length byte, is given by the first byte of the FIFO and is limited to 255 bytes if AES is not enabled else the message is limited to 64 bytes (i.e. max 66 bytes payload if Address byte is enabled). Note that the length byte itself is not included in its calculation. In this mode, the payload must contain at least 2 bytes, i.e. length + address or message byte.

An illustration of a variable length packet is shown below. It contains the following fields:

- Preamble (1010...)
- Sync word (Network ID)
- Length byte
- Optional Address byte (Node ID)
- Message data
- Optional 2-bytes CRC checksum

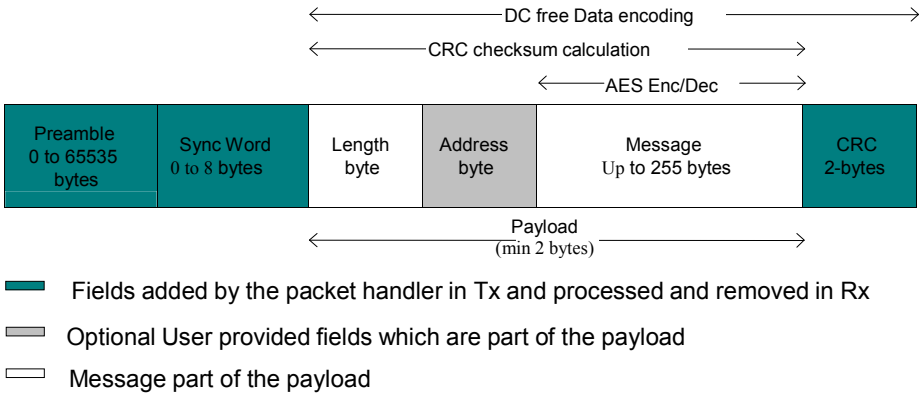

Figure 34. Variable Length Packet Format

Tel: +86-755-82973805 Fax: +86-755-82973550 E-mail: sales@hoperf.com http://www.hoperf.com

5.5.2.3. Unlimited Length Packet Format

Unlimited length packet format is selected when bit *PacketFormat* is set to 0 and *PayloadLength* is set to 0.

The user can then transmit and receive packet of arbitrary length and *PayloadLength* register is not used in Tx/Rx modes for counting the length of the bytes transmitted/received. This mode is a replacement for the legacy buffered mode in RF63/RF64 transceivers.

In Tx the data is transmitted depending on the *TxStartCondition* bit. On the Rx side the data processing features like Address filtering, Manchester encoding and data whitening are not available if the sync pattern length is set to zero (*SyncOn = 0*). The filling of the FIFO in this case can be controlled by the bit *FifoFillCondition*. The CRC detection in Rx is also not supported in this mode of the packet handler, however CRC generation in Tx is operational. The interrupts like *CrcOk* & *PayloadReady* are not available either.

An unlimited length packet shown in is made up of the following fields:

- Preamble (1010...).
- Sync word (Network ID).
- Optional Address byte (Node ID).
- Message data
- Optional 2-bytes CRC checksum (Tx only)

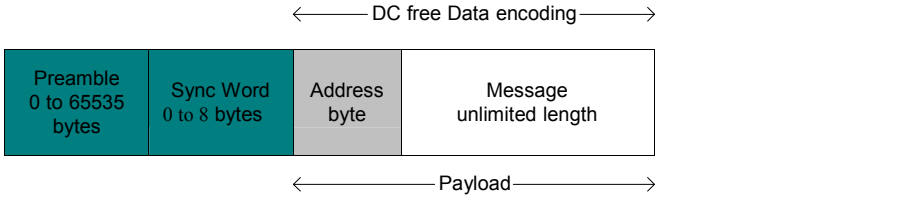

Figure 35. Unlimited Length Packet Format

5.5.3. Tx Processing (without AES)

In Tx mode the packet handler dynamically builds the packet by performing the following operations on the payload available in the FIFO:

- Add a programmable number of preamble bytes
- Add a programmable Sync word
- Optionally calculating CRC over complete payload field (optional length byte + optional address byte + message) andappending the 2 bytes checksum.
- Optional DC-free encoding of the data (Manchester or whitening)

Only the payload (including optional address and length fields) is required to be provided by the user in the FIFO.

Tel: +86-755-82973805 Fax: +86-755-82973550 E-mail: sales@hoperf.com http://www.hoperf.com

The transmission of packet data is initiated by the Packet Handler only if the module is in Tx mode and the transmission condition defined by *TxStartCondition* is fulfilled. If transmission condition is not fulfilled then the packet handler transmits a preamble sequence until the condition is met. This happens only if the preamble length /= 0, otherwise it transmits a zero or one until the condition is met to transmit the packet data.

The transmission condition itself is defined as:

- if *TxStartCondition* = 1, the packet handler waits until the first byte is written into the FIFO, then it starts sending the preamble followed by the sync word and user payload
- If *TxStartCondition* = 0, the packet handler waits until the number of bytes written in the FIFO is equal to the number defined in *RegFifoThresh* + 1
- If the condition for transmission was already fulfilled i.e. the FIFO was filled in Sleep/Stdby then the transmission of packet starts immediately on enabling Tx

5.5.4. Rx Processing (without AES)

In Rx mode the packet handler extracts the user payload to the FIFO by performing the following operations:

- Receiving the preamble and stripping it off
- Detecting the Sync word and stripping it off
- Optional DC-free decoding of data
- Optionally checking the address byte
- Optionally checking CRC and reflecting the result on *CrcOk.*

Only the payload (including optional address and length fields) is made available in the FIFO.

When the Rx mode is enabled the demodulator receives the preamble followed by the detection of sync word. If fixed length packet format is enabled then the number of bytes received as the payload is given by the *PayloadLength* parameter.

In variable length mode the first byte received after the sync word is interpreted as the length of the received packet. The internal length counter is initialized to this received length. The *PayloadLength* register is set to a value which is greater than the maximum expected length of the received packet. If the received length is greater than the maximum length stored in *PayloadLength* register the packet is discarded otherwise the complete packet is received.

If the address check is enabled then the second byte received in case of variable length and first byte in case of fixed length is the address byte. If the address matches to the one in the *NodeAddress* field, reception of the data continues otherwise it's stopped. The CRC check is performed if *CrcOn* = 1 and the result is available in *CrcOk* indicating that the CRC was successful. An interrupt (*PayloadReady*) is also generated on DIO0 as soon as the payload is available in the FIFO. The payload available in the FIFO can also be read in Sleep/Standby mode.

If the CRC fails the *PayloadReady* interrupt is not generated and the FIFO is cleared. This function can be overridden by setting *CrcAutoClearOff* = 1, forcing the availability of *PayloadReady* interrupt and the payload in the FIFO even if the CRC fails.

5.5.5. AES

AES is the symmetric-key block cipher that provides the cryptographic capabilities to the transceiver. The system proposed can work with 128-bit long fixed keys. The fixed key is stored in a 16-byte write only user configuration register, which retains its value in Sleep mode.

Tel: +86-755-82973805 Fax: +86-755-82973550 E-mail: sales@hoperf.com http://www.hoperf.com

As shown in Figure 33 and Figure 34 above the message part of the Packet can be encrypted and decrypted with the cipher 128- cipher key stored in the configuration registers.

5.5.5.1. Tx Processing

1. User enters the data to be transmitted in FIFO in Stdby/Sleep mode and gives the transmit command.
2. On Tx command the Packet handler state machine takes over the control and If encryption is enabled then the message inside the FIFO is read in blocks of 16 bytes (padded with 0s if needed), encrypted and stored back to FIFO. All this processing is done in Tx mode before enabling the packet handling state machine. Only the Message part of the packet is encrypted and preamble, sync word, length byte, address byte and CRC are not encrypted.
3. Once the encryption is done the Packet handling state machine is enabled to transmit the data.

5.5.5.2. Rx Processing

1. The data received is stored in the FIFO, The address, CRC interrupts are generated as usual because these parameters were not encrypted.
2. Once the complete packet has been received. The data is read from the FIFO, decrypted and written back to FIFO. The *PayloadReady* interrupt is issued once the decrypted data is ready in the FIFO for reading via the SPI interface.

The AES encryption/decryption cannot be used on the fly i.e. while transmitting and receiving data. Thus when AES encryption/decryption is enabled, the FIFO acts as a simple buffer. This buffer is filled before initiating any transmission. The data in the buffer is then encrypted before the transmission can begin. On the receive side the decryption is initiated only once the complete packet has been received in the buffer.

The encryption/decryption process takes approximately 7.0 us per 16-byte block. Thus for a maximum of 4 blocks (i.e. 64 bytes) it can take up to 28 us for completing the cryptographic operations.

The receive side sees the AES decryption time as a sequential delay before the *PayloadReady* interrupt is available.

The Tx side sees the AES encryption time as a sequential delay in the startup of the Tx chain, thus the startup time of the Tx will increase according to the length of data.

In Fixed length mode the Message part of the payload that can be encrypted/decrypted can be 64 bytes long. If the address filtering is enabled, the length of the payload should be at max 65 bytes in this case.

In Variable length mode the Max message size that can be encrypted/decrypted is also 64 bytes when address filtering is disabled, else it is 48 bytes. Thus, including length byte, the length of the payload is max 65 or 50 bytes (the latter when address filtering is enabled).

If the address filtering is expected then *AddressFiltering* must be enabled on the transmitter side as well to prevent address byte to be encrypted.

Crc check being performed on encrypted data, *CrcOk* interrupt will occur "decryption time" before *PayloadReady* interrupt.

Tel: +86-755-82973805 Fax: +86-755-82973550 E-mail: sales@hoperf.com http://www.hoperf.com

5.5.6. Handling Large Packets

When Payload length exceeds FIFO size (66 bytes) whether in fixed, variable or unlimited length packet format, in addition to *PacketSent* in Tx and *PayloadReady* or *CrcOk* in Rx, the FIFO interrupts/flags can be used as described below:

◆ For Tx:

FIFO can be prefilled in Sleep/Standby but must be refilled "on-the-fly" during Tx with the rest of the payload.

1) Prefill FIFO (in Sleep/Standby first or directly in Tx mode) until *FifoThreshold* or *FifoFull* is set

2) In Tx, wait for *FifoThreshold* or *FifoNotEmpty* to be cleared (i.e. FIFO is nearly empty)

3) Write bytes into the FIFO until *FifoThreshold* or *FifoFull* is set.

4) Continue to step 2 until the entire message has been written to the FIFO (*PacketSent* will fire when the last bit of the packet has been sent).

◆ For Rx:

FIFO must be unfilled "on-the-fly" during Rx to prevent FIFO overrun.

1) Start reading bytes from the FIFO when *FifoNotEmpty* or *FifoThreshold* becomes set.

2) Suspend reading from the FIFO if *FifoNotEmpty* clears before all bytes of the message have been read

3) Continue to step 1 until *PayloadReady* or *CrcOk* fires

4) Read all remaining bytes from the FIFO either in Rx or Sleep/Standby mode

Note *AES encryption is not feasible on large packets, since all Payload bytes need to be in the FIFO at the same time to perform encryption*

5.5.7. Packet Filtering

RFM69C's packet handler offers several mechanisms for packet filtering, ensuring that only useful packets are made available to the uC, reducing significantly system power consumption and software complexity.

5.5.7.1. Sync Word Based

Sync word filtering/recognition is used for identifying the start of the payload and also for network identification. As previously described, the Sync word recognition block is configured (size, error tolerance, value) in *RegSyncValue* registers. This information is used, both for appending Sync word in Tx, and filtering packets in Rx.

Every received packet which does not start with this locally configured Sync word is automatically discarded and no interrupt is generated.

When the Sync word is detected, payload reception automatically starts and *SyncAddressMatch* is asserted.

Note *Sync Word values containing 0x00 byte(s) are forbidden*

Tel: +86-755-82973805 Fax: +86-755-82973550 E-mail: sales@hoperf.com http://www.hoperf.com

5.5.7.2. Address Based

Address filtering can be enabled via the *AddressFiltering* bits. It adds another level of filtering, above Sync word (i.e. Sync must match first), typically useful in a multi-node networks where a network ID is shared between all nodes (Sync word) and each node has its own ID (address).

Two address based filtering options are available:

- *AddressFiltering = 01*: Received address field is compared with internal register *NodeAddress*. If they match then thepacket is accepted and processed, otherwise it is discarded.
- *AddressFiltering = 10: Received address field is compared with internal registers NodeAddress and BroadcastAddress.If either is a match, the received packet is accepted and processed, otherwise it is discarded. This additional check with a constant is useful for implementing broadcast in a multi-node networks*

Please note that the received address byte, as part of the payload, is not stripped off the packet and is made available in the FIFO. In addition, *NodeAddress* and *AddressFiltering* only apply to Rx. On Tx side, if address filtering is expected, the address byte should simply be put into the FIFO like any other byte of the payload.

As address filtering requires a Sync word match, both features share the same interrupt flag *SyncAddressMatch*.

5.5.7.3. Length Based

In variable length Packet mode, *PayloadLength* must be programmed with the maximum payload length permitted. If received length byte is smaller than this maximum then the packet is accepted and processed, otherwise it is discarded.

Please note that the received length byte, as part of the payload, is not stripped off the packet and is made available in the FIFO.

To disable this function the user should set the value of the *PayloadLength* to 255.

5.5.7.4. CRC Based

The CRC check is enabled by setting bit *CrcOn* in *RegPacketConfig1*. It is used for checking the integrity of the message.

- *On Tx side a two byte CRC checksum is calculated on the payload part of the packet and appended to the end of the message*
- *On Rx side the checksum is calculated on the received payload and compared with the two checksum bytes received.The result of the comparison is stored in bit CrcOk.*

By default, if the CRC check fails then the FIFO is automatically cleared and no interrupt is generated. This filtering function can be disabled via *CrcAutoClearOff* bit and in this case, even if CRC fails, the FIFO is not cleared and only *PayloadReady* interrupt goes high. Please note that in both cases, the two CRC checksum bytes are stripped off by the packet handler and only the payload is made available in the FIFO.

The CRC is based on the CCITT polynomial as shown below. This implementation also detects errors due to leading and trailing zeros.

Tel: +86-755-82973805 Fax: +86-755-82973550 E-mail: sales@hoperf.com http://www.hoperf.com

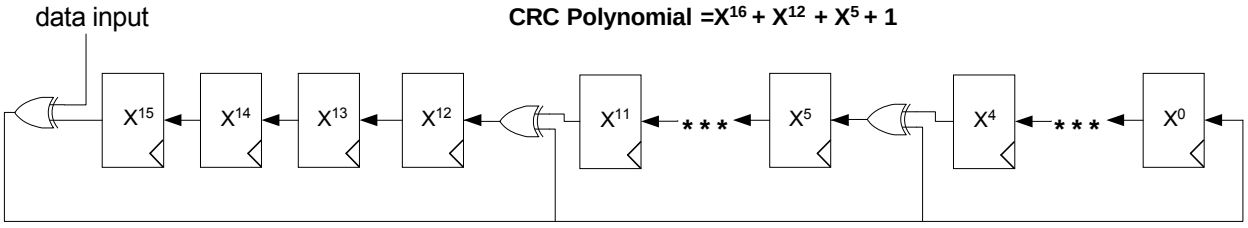

Figure 36. CRC Implementation

5.5.8. DC-Free Data Mechanisms

The payload to be transmitted may contain long sequences of 1's and 0's, which introduces a DC bias in the transmitted signal. The radio signal thus produced has a non uniform power distribution over the occupied channel bandwidth. It also introduces data dependencies in the normal operation of the demodulator. Thus it is useful if the transmitted data is random and DC free.

For such purposes, two techniques are made available in the packet handler: Manchester encoding and data whitening.

Note Only one of the two methods should be enabled at a time.

5.5.8.1. Manchester Encoding

Manchester encoding/decoding is enabled if *DcFree = 01* and can only be used in Packet mode.

The NRZ data is converted to Manchester code by coding '1' as "10" and '0' as "01".

In this case, the maximum chip rate is the maximum bit rate given in the specifications section and the actual bit rate is half the chip rate.

Manchester encoding and decoding is only applied to the payload and CRC checksum while preamble and Sync word are kept NRZ. However, the chip rate from preamble to CRC is the same and defined by *BitRate* in *RegBitRate* (Chip Rate = Bit Rate NRZ = 2 x Bit Rate Manchester).

Manchester encoding/decoding is thus made transparent for the user, who still provides/retrieves NRZ data to/from the FIFO

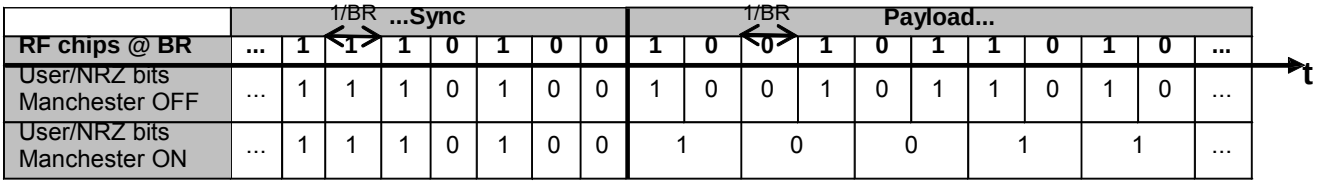

Figure 37. Manchester Encoding/Decoding

Tel: +86-755-82973805 Fax: +86-755-82973550 E-mail: sales@hoperf.com http://www.hoperf.com

5.5.8.2. Data Whitening

Another technique called whitening or scrambling is widely used for randomizing the user data before radio transmission. The data is whitened using a random sequence on the Tx side and de-whitened on the Rx side using the same sequence. Comparing to Manchester technique it has the advantage of keeping NRZ data rate i.e. actual bit rate is not halved.

The whitening/de-whitening process is enabled if *DcFree = 10*. A 9-bit LFSR is used to generate a random sequence. The payload and 2-byte CRC checksum is then XORed with this random sequence as shown below. The data is de-whitened on the receiver side by XORing with the same random sequence.

Payload whitening/de-whitening is thus made transparent for the user, who still provides/retrieves NRZ data to/from the FIFO.

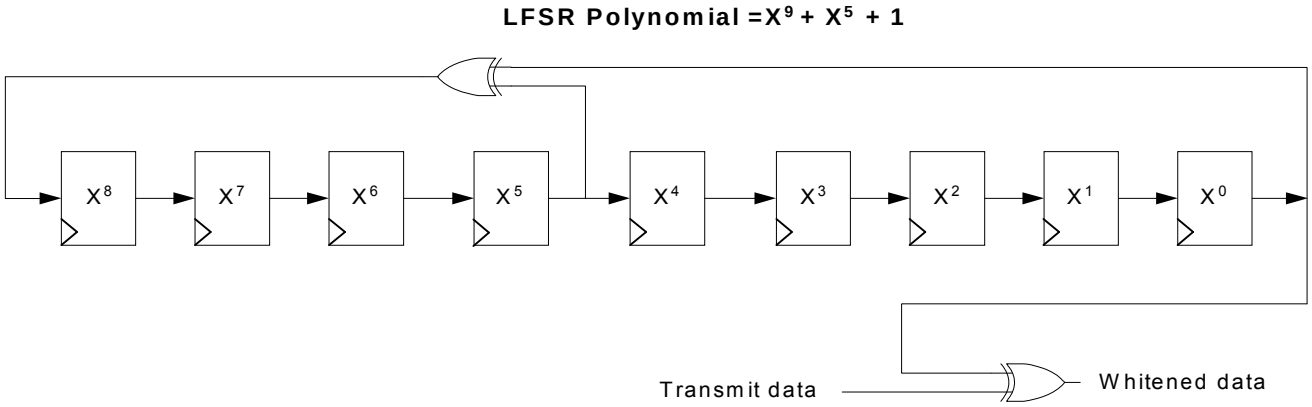

Figure 38. Data Whitening

Tel: +86-755-82973805 Fax: +86-755-82973550 E-mail: sales@hoperf.com http://www.hoperf.com

6. Configuration and Status Registers

6.1. General Description

Table 23 Registers Summary

Address	Register Name	Reset (built-in)	Default (recommended)	Description
0x00	RegFifo	0x00		FIFO read/write access
0x01	RegOpMode	0x04		Operating modes of the transceiver
0x02	RegDataModul	0x00		Data operation mode and Modulation settings
0x03	RegBitrateMsb	0x1A		Bit Rate setting, Most Significant Bits
0x04	RegBitrateLsb	0x0B		Bit Rate setting, Least Significant Bits
0x05	RegFdevMsb	0x00		Frequency Deviation setting, Most Significant Bits
0x06	RegFdevLsb	0x52		Frequency Deviation setting, Least Significant Bits
0x07	RegFrfMsb	0xE4		RF Carrier Frequency, Most Significant Bits
0x08	RegFrfMid	0xC0		RF Carrier Frequency, Intermediate Bits
0x09	RegFrfLsb	0x00		RF Carrier Frequency, Least Significant Bits
0x0A	RegOsc1	0x41		RC Oscillators Settings
0x0B	RegAfcCtrl	0x00		AFC control in low modulation index situations
0x0C	Reserved0C	0x02		-
0x0D	RegListen1	0x92		Listen Mode settings
0x0E	RegListen2	0xF5		Listen Mode Idle duration
0x0F	RegListen3	0x20		Listen Mode Rx duration
0x10	RegVersion	0x24		
0x11	RegPaLevel	0x9F		PA selection and Output Power control
0x12	RegPaRamp	0x09		Control of the PA ramp time in FSK mode
0x13	RegOcp	0x1A		Over Current Protection control
0x14	Reserved14	0x40		-
0x15	Reserved15	0xB0		-
0x16	Reserved16	0x7B		-
0x17	Reserved17	0x9B		-
0x18	RegLna	0x08	0x88	LNA settings
0x19	RegRxBw	0x86	0x55	Channel Filter BW Control

Tel: +86-755-82973805 Fax: +86-755-82973550 E-mail: sales@hoperf.com http://www.hoperf.com

Address	Register Name	Reset (built-in)	Default (recommended)	Description
0x1A	RegAfcBw	0x8A	0x8B	Channel Filter BW control during the AFC routine
0x1B	RegOokPeak	0x40		OOK demodulator selection and control in peak mode
0x1C	RegOokAvg	0x80		Average threshold control of the OOK demodulator
0x1D	RegOokFix	0x06		Fixed threshold control of the OOK demodulator
0x1E	RegAfcFei	0x10		AFC and FEI control and status
0x1F	RegAfcMsb	0x00		MSB of the frequency correction of the AFC
0x20	RegAfcLsb	0x00		LSB of the frequency correction of the AFC
0x21	RegFeiMsb	0x00		MSB of the calculated frequency error
0x22	RegFeiLsb	0x00		LSB of the calculated frequency error
0x23	RegRssiConfig	0x02		RSSI-related settings
0x24	RegRssiValue	0xFF		RSSI value in dBm
0x25	RegDioMapping1	0x00		Mapping of pins DIO0 to DIO3
0x26	RegDioMapping2	0x05	0x07	Mapping DIO5, ClkOut frequency
0x27	RegIrqFlags1	0x80		Status register: PLL Lock state, Timeout, RSSI > Threshold...
0x28	RegIrqFlags2	0x00		Status register: FIFO handling flags...
0x29	RegRssiThresh	0xFF	0xE4	RSSI Threshold control
0x2A	RegRxTimeout1	0x00		Timeout duration between Rx request and RSSI detection
0x2B	RegRxTimeout2	0x00		Timeout duration between RSSI detection and *PayloadReady*
0x2C	RegPreambleMsb	0x00		Preamble length, MSB
0x2D	RegPreambleLsb	0x03		Preamble length, LSB
0x2E	RegSyncConfig	0x98		Sync Word Recognition control
0x2F-0x36	RegSyncValue1-8	0x00	0x01	Sync Word bytes, 1 through 8
0x37	RegPacketConfig1	0x10		Packet mode settings
0x38	RegPayloadLength	0x40		Payload length setting
0x39	RegNodeAdrs	0x00		Node address
0x3A	RegBroadcastAdrs	0x00		Broadcast address
0x3B	RegAutoModes	0x00		Auto modes settings
0x3C	RegFifoThresh	0x0F	0x8F	Fifo threshold, Tx start condition
0x3D	RegPacketConfig2	0x02		Packet mode settings

Tel: +86-755-82973805 Fax: +86-755-82973550 E-mail: sales@hoperf.com http://www.hoperf.com

Address	Register Name	Reset (built-in)	Default (recommended)	Description
0x3E-0x4D	RegAesKey1-16	0x00		16 bytes of the cypher key
0x4E	RegTemp1	0x01		Temperature Sensor control
0x4F	RegTemp2	0x00		Temperature readout
0x58	RegTestLna	0x1B		Sensitivity boost
0x5A	RegTestPa1			
0x5C	RegTestPa2			
0x6F	RegTestDagc	0x00	0x30	Fading Margin Improvement
0x71	RegTestAfc	0x00		AFC offset for low modulation index AFC
0x50 +	RegTest	-		Internal test registers

Note - Reset values are automatically refreshed in the module at Power On Reset

- Default values are recommended register values, optimizing the device operation

*- Registers for which the Default value differs from the Reset value are denoted by a * in the tables of section 6*

Tel: +86-755-82973805 Fax: +86-755-82973550 E-mail: sales@hoperf.com http://www.hoperf.com

6.2. Common Configuration Registers

Table 24 Common Configuration Registers

Name (Address)	Bits	Variable Name	Mode	Default Value	Description
RegFifo (0x00)	7-0	Fifo	rw	0x00	FIFO data input/output
RegOpMode (0x01)	7	SequencerOff	rw	0	Controls the automatic Sequencer (see section 4.2): 0 → Operating mode as selected with Mode bits in RegOpMode is automatically reached with the Sequencer 1 → Mode is forced by the user
	6	ListenOn	rw	0	Enables Listen mode, should be enabled whilst in Standby mode: 0 → Off (see section 4.3) 1 → On
	5	ListenAbort	w	0	Aborts Listen mode when set together with ListenOn=0 See section 4.3.4 for details Always reads 0.
	4-2	Mode	rw	001	Transceiver's operating modes: 000 → Sleep mode (SLEEP) 001 → Standby mode (STDBY) 010 → Frequency Synthesizer mode (FS) 011 → Transmitter mode (TX) 100 → Receiver mode (RX) others → reserved Reads the value corresponding to the current chip mode
	1-0	-	r	00	unused
RegDataModul (0x02)	7	-	r	0	unused
	6-5	DataMode	rw	00	Data processing mode: 00 → Packet mode 01 → reserved 10 → Continuous mode with bit synchronizer 11 → Continuous mode without bit synchronizer
	4-3	ModulationType	rw	00	Modulation scheme: 00 → FSK 01 → OOK 10 - 11 → reserved
	2	-	r	0	unused
	1-0	ModulationShaping	rw	00	Data shaping: in FSK: 00 → no shaping 01 → Gaussian filter, BT = 1.0 10 → Gaussian filter, BT = 0.5 11 → Gaussian filter, BT = 0.3 in OOK: 00 → no shaping 01 → filtering with f_{cutoff} = BR 10 → filtering with f_{cutoff} = 2*BR 11 → reserved
RegBitrateMsb (0x03)	7-0	BitRate(15:8)	rw	0x1a	MSB of Bit Rate (Chip Rate when Manchester encoding is enabled)

Tel: +86-755-82973805 Fax: +86-755-82973550 E-mail: sales@hoperf.com http://www.hoperf.com

RegBitrateLsb (0x04)	7-0	BitRate(7:0)	rw	0x0b	LSB of Bit Rate (Chip Rate if Manchester encoding is enabled) $BitRate = \frac{FXO_SC}{BitRate(15,0)}$ Default value: 4.8 kb/s
RegFdevMsb (0x05)	7-6	-	r	00	unused
	5-0	Fdev(13:8)	rw	000000	MSB of the frequency deviation
RegFdevLsb (0x06)	7-0	Fdev(7:0)	rw	0x52	LSB of the frequency deviation $Fdev = Fstep \cdot Fdev(15,0)$ Default value: 5 kHz
RegFrfMsb (0x07)	7-0	Frf(23:16)	rw	0xe4	MSB of the RF carrier frequency
RegFrfMid (0x08)	7-0	Frf(15:8)	rw	0xc0	Middle byte of the RF carrier frequency
RegFrfLsb (0x09)	7-0	Frf(7:0)	rw	0x00	LSB of the RF carrier frequency $Frf = Fstep \cdot Frf\ 23;0.$ Default value: Frf = 915 MHz (32 MHz XO)
RegOsc1 (0x0A)	7	RcCalStart	w	0	Triggers the calibration of the RC oscillator when set. Always reads 0. RC calibration must be triggered in Standby mode.
	6	RcCalDone	r	1	0 → RC calibration in progress 1 → RC calibration is over
	5-0	-	r	000001	unused
RegAfcCtrl (0x0B)	7-6	-	r	00	unused
	5	AfcLowBetaOn	rw	0	Improved AFC routine for signals with modulation index lower than 2. Refer to section 3.4.16 for details 0 → Standard AFC routine 1 → Improved AFC routine
	4-0	-	r	00000	unused
Reserved0C (0x0C)	7-0	-	r	0x02	unused

Tel: +86-755-82973805 Fax: +86-755-82973550 E-mail: sales@hoperf.com http://www.hoperf.com

RegListen1 (0x0D)	7-6	ListenResolIdle	rw	10	Resolution of Listen mode Idle time (calibrated RC osc): 00 → reserved 01 → 64 us 10 → 4.1 ms 11 → 262 ms
	5-4	ListenResolRx	rw	01	Resolution of Listen mode Rx time (calibrated RC osc): 00 → reserved 01 → 64 us 10 → 4.1 ms 11 → 262 ms
	3	ListenCriteria	rw	0	Criteria for packet acceptance in Listen mode: 0 → signal strength is above *RssiThreshold* 1 → signal strength is above *RssiThreshold* and *SyncAddress* matched
	2-1	ListenEnd	rw	01	Action taken after acceptance of a packet in Listen mode: 00 → chip stays in Rx mode. Listen mode stops and must be disabled (see section 4.3). 01 → chip stays in Rx mode until *PayloadReady* or *Timeout* interrupt occurs. It then goes to the mode defined by *Mode*. Listen mode stops and must be disabled (see section 4.3). 10 → chip stays in Rx mode until *PayloadReady* or *Timeout* interrupt occurs. Listen mode then resumes in Idle state. FIFO content is lost at next Rx wakeup. 11 → Reserved
	0	-	r	0	unused
RegListen2 (0x0E)	7-0	ListenCoefIdle	rw	0xf5	Duration of the Idle phase in Listen mode. $t_{ListenIdle} = ListenCoefIdle * ListenResolIdle$
RegListen3 (0x0F)	7-0	ListenCoefRx	rw	0x20	Duration of the Rx phase in Listen mode (startup time included, see section 4.2.3) $t_{ListenRx} = ListenCoefRx * ListenResolRx$
RegVersion (0x10)	7-0	Version	r	0x24	Version code of the chip. Bits 7-4 give the full revision number; bits 3-0 give the metal mask revision number.

Tel: +86-755-82973805 Fax: +86-755-82973550 E-mail: sales@hoperf.com http://www.hoperf.com

6.3. Transmitter Registers

Table 25 Transmitter Registers

Name (Address)	Bits	Variable Name	Mode	Default Value	Description
RegPaLevel (0x11)	7	Pa0On *	rw	1	Enables PA0, connected to RFIO and LNA
	6	Pa1On *	rw	0	Enables PA1, on PA_BOOST pin
	5	Pa2On *	rw	0	Enables PA2, on PA_BOOST pin
	4-0	OutputPower	rw	11111	Output power setting, with 1 dB steps Pout = -18 + *OutputPower* [dBm] , with PA0
RegPaRamp (0x12)	7-4	-	r	0000	unused
	3-0	PaRamp	rw	1001	Rise/Fall time of ramp up/down in FSK 0000 → 3.4 ms 0001 → 2 ms 0010 → 1 ms 0011 → 500 us 0100 → 250 us 0101 → 125 us 0110 → 100 us 0111 → 62 us 1000 → 50 us 1001 → 40 us 1010 → 31 us 1011 → 25 us 1100 → 20 us 1101 → 15 us 1110 → 12 us 1111 → 10 us
RegOcp (0x13)	7-5	-	r	000	unused
	4	OcpOn	rw	1	Enables overload current protection (OCP) for the PA: 0 → OCP disabled 1 → OCP enabled
	3-0	OcpTrim	rw	1010	Trimming of OCP current: $Imax = 45 + 5 * OcpTrim\ mA$ 95 mA OCP by default

Note **Power Amplifier truth table is available in Table 10*

*** Only the16 upper values of OutputPower are accessible*

Tel: +86-755-82973805 Fax: +86-755-82973550 E-mail: sales@hoperf.com http://www.hoperf.com

6.4. Receiver Registers

Table 26 Receiver Registers

Name (Address)	Bits	Variable Name	Mode	Default Value	Description
Reserved14 (0x14)	7-0	-	r	0x40	unused
Reserved15 (0x15)	7-0	-	r	0xB0	unused
Reserved16 (0x16)	7-0	-	r	0x7B	unused
Reserved17 (0x17)	7-0	-	r	0x9B	unused
RegLna (0x18)	7	LnaZin	rw	1 *	LNA's input impedance 0 → 50 ohms 1 → 200 ohms
	6	-	r	0	unused
	5-3	LnaCurrentGain	r	001	Current LNA gain, set either manually, or by the AGC
	2-0	LnaGainSelect	rw	000	LNA gain setting: 000 → gain set by the internal AGC loop 001 → G1 = highest gain 010 → G2 = highest gain – 6 dB 011 → G3 = highest gain – 12 dB 100 → G4 = highest gain – 24 dB 101 → G5 = highest gain – 36 dB 110 → G6 = highest gain – 48 dB 111 → reserved
RegRxBw (0x19)	7-5	DccFreq	rw	010 *	Cut-off frequency of the DC offset canceller (DCC): $fc = \frac{4 \times RxBw}{2\pi \times 2^{DccFreq+2}}$ ~4% of the RxBw by default
	4-3	RxBwMant	rw	10 *	Channel filter bandwidth control: 00 → RxBwMant = 16 10 → RxBwMant = 24 01 → RxBwMant = 20 11 → reserved
	2-0	RxBwExp	rw	101 *	Channel filter bandwidth control: FSK Mode: $RxBw = \frac{FXOSC}{RxBwMant \times 2^{RxBwExp+2}}$ OOK Mode: $RxBw = \frac{FXOSC}{RxBwMant \times 2^{RxBwExp+3}}$ See Table 14 for tabulated values
RegAfcBw (0x1A)	7-5	DccFreqAfc	rw	100	DccFreq parameter used during the AFC
	4-3	RxBwMantAfc	rw	01	RxBwMant parameter used during the AFC
	2-0	RxBwExpAfc	rw	011 *	RxBwExp parameter used during the AFC

Tel: +86-755-82973805 Fax: +86-755-82973550 E-mail: sales@hoperf.com http://www.hoperf.com

RegOokPeak (0x1B)	7-6	OokThreshType	rw	01	Selects type of threshold in the OOK data slicer: 00 → fixed 10 → average 01 → peak 11 → reserved
	5-3	OokPeakTheshStep	rw	000	Size of each decrement of the RSSI threshold in the OOK demodulator: 000 → 0.5 dB 001 → 1.0 dB 010 → 1.5 dB 011 → 2.0 dB 100 → 3.0 dB 101 → 4.0 dB 110 → 5.0 dB 111 → 6.0 dB
	2-0	OokPeakThreshDec	rw	000	Period of decrement of the RSSI threshold in the OOK demodulator: 000 → once per chip 001 → once every 2 chips 010 → once every 4 chips 011 → once every 8 chips 100 → twice in each chip 101 → 4 times in each chip 110 → 8 times in each chip 111 → 16 times in each chip
RegOokAvg (0x1C)	7-6	OokAverageThreshFilt	rw	10	Filter coefficients in average mode of the OOK demodulator: 00 → f_C ≈ chip rate / 32.π 01 → f_C ≈ chip rate / 8.π 10 → f_C ≈ chip rate / 4.π 11 → f_C ≈ chip rate / 2.π
	5-0	-	r	000000	unused
RegOokFix (0x1D)	7-0	OokFixedThresh	rw	0110 (6dB)	Fixed threshold value (in dB) in the OOK demodulator. Used when *OokThresType* = 00
RegAfcFei (0x1E)	7	-	r	0	unused
	6	FeiDone	r	0	0 → FEI is on-going 1 → FEI finished
	5	FeiStart	w	0	Triggers a FEI measurement when set. Always reads 0.
	4	AfcDone	r	1	0 → AFC is on-going 1 → AFC has finished
	3	AfcAutoclearOn	rw	0	Only valid if *AfcAutoOn* is set 0 → AFC register is not cleared before a new AFC phase 1 → AFC register is cleared before a new AFC phase
	2	AfcAutoOn	rw	0	0 → AFC is performed each time *AfcStart* is set 1 → AFC is performed each time Rx mode is entered
	1	AfcClear	w	0	Clears the AfcValue if set in Rx mode. Always reads 0
	0	AfcStart	w	0	Triggers an AFC when set. Always reads 0.
RegAfcMsb (0x1F)	7-0	AfcValue(15:8)	r	0x00	MSB of the AfcValue, 2's complement format
RegAfcLsb (0x20)	7-0	AfcValue(7:0)	r	0x00	LSB of the AfcValue, 2's complement format *Frequency correction* = AfcValue x Fstep
RegFeiMsb (0x21)	7-0	FeiValue(15:8)	r	-	MSB of the measured frequency offset, 2's complement
RegFeiLsb (0x22)	7-0	FeiValue(7:0)	r	-	LSB of the measured frequency offset, 2's complement *Frequency error* = FeiValue x Fstep
RegRssiConfig (0x23)	7-2	-	r	000000	unused
	1	RssiDone	r	1	0 → RSSI is on-going 1 → RSSI sampling is finished, result available
	0	RssiStart	w	0	Trigger a RSSI measurement when set. Always reads 0.
RegRssiValue (0x24)	7-0	RssiValue	r	0xFF	Absolute value of the RSSI in dBm, 0.5dB steps. RSSI = *-RssiValue/2 [dBm]*

Tel: +86-755-82973805 Fax: +86-755-82973550 E-mail: sales@hoperf.com http://www.hoperf.com

6.5. IRQ and Pin Mapping Registers

Table 27 IRQ and Pin Mapping Registers

Name (Address)	Bits	Variable Name	Mode	Default Value	Description
RegDioMapping1 (0x25)	7-6	Dio0Mapping	rw	00	Mapping of pins DIO0 to DIO5 See Table 21 for mapping in Continuous mode See Table 22 for mapping in Packet mode
	5-4	Dio1Mapping	rw	00	
	3-2	Dio2Mapping	rw	00	
	1-0	Dio3Mapping	rw	00	
RegDioMapping2 (0x26)	7-6				
	5-4	Dio5Mapping	rw	00	
	3	-	r	0	unused
	2-0	ClkOut	rw	111 *	Selects CLKOUT frequency: 000 → FXOSC 001 → FXOSC / 2 010 → FXOSC / 4 011 → FXOSC / 8 100 → FXOSC / 16 101 → FXOSC / 32 110 → RC (automatically enabled) 111 → OFF
RegIrqFlags1 (0x27)	7	ModeReady	r	1	Set when the operation mode requested in *Mode*, is ready - Sleep: Entering Sleep mode - Standby: XO is running - FS: PLL is locked - Rx: RSSI sampling starts - Tx: PA ramp-up completed Cleared when changing operating mode.
	6	RxReady	r	0	Set in Rx mode, after RSSI, AGC and AFC. Cleared when leaving Rx.
	5	TxReady	r	0	Set in Tx mode, after PA ramp-up. Cleared when leaving Tx.
	4	PllLock	r	0	Set (in FS, Rx or Tx) when the PLL is locked. Cleared when it is not.
	3	Rssi	rwc	0	Set in Rx when the *RssiValue* exceeds *RssiThreshold.* Cleared when leaving Rx.
	2	Timeout	r	0	Set when a timeout occurs (see *TimeoutRxStart* and *TimeoutRssiThresh*) Cleared when leaving Rx or FIFO is emptied.
	1	AutoMode	r	0	Set when entering Intermediate mode. Cleared when exiting Intermediate mode. Please note that in Sleep mode a small delay can be observed between *AutoMode* interrupt and the corresponding enter/exit condition.
	0	SyncAddressMatch	r/rwc	0	Set when Sync and Address (if enabled) are detected. Cleared when leaving Rx or FIFO is emptied. This bit is read only in Packet mode, rwc in Continuous mode

Tel: +86-755-82973805 Fax: +86-755-82973550 E-mail: sales@hoperf.com http://www.hoperf.com

RegIrqFlags2 (0x28)	7	FifoFull	r	0	Set when FIFO is full (i.e. contains 66 bytes), else cleared.
	6	FifoNotEmpty	r	0	Set when FIFO contains at least one byte, else cleared
	5	FifoLevel	r	0	Set when the number of bytes in the FIFO strictly exceeds *FifoThreshold*, else cleared.
	4	FifoOverrun	rwc	0	Set when FIFO overrun occurs. (except in Sleep mode) Flag(s) and FIFO are cleared when this bit is set. The FIFO then becomes immediately available for the next transmission / reception.
	3	PacketSent	r	0	Set in Tx when the complete packet has been sent. Cleared when exiting Tx.
	2	PayloadReady	r	0	Set in Rx when the payload is ready (i.e. last byte received and CRC, if enabled and *CrcAutoClearOff* is cleared, is Ok). Cleared when FIFO is empty.
	1	CrcOk	r	0	Set in Rx when the CRC of the payload is Ok. Cleared when FIFO is empty.
	0	-	r	0	unused
RegRssiThresh (0x29)	7-0	RssiThreshold	rw	0xE4 *	RSSI trigger level for *Rssi* interrupt : - *RssiThreshold* / 2 [dBm]
RegRxTimeout1 (0x2A)	7-0	TimeoutRxStart	rw	0x00	*Timeout* interrupt is generated *TimeoutRxStart**16*T_{bit} after switching to Rx mode if *Rssi* interrupt doesn't occur (i.e. *RssiValue* > *RssiThreshold)* 0x00: *TimeoutRxStart* is disabled
RegRxTimeout2 (0x2B)	7-0	TimeoutRssiThresh	rw	0x00	*Timeout* interrupt is generated *TimeoutRssiThresh**16*T_{bit} after *Rssi* interrupt if *PayloadReady* interrupt doesn't occur. 0x00: *TimeoutRssiThresh* is disabled

Tel: +86-755-82973805 Fax: +86-755-82973550 E-mail: sales@hoperf.com http://www.hoperf.com

6.6. Packet Engine Registers

Table 28 Packet Engine Registers

Name (Address)	Bits	Variable Name	Mode	Default Value	Description
RegPreambleMsb (0x2c)	7-0	PreambleSize(15:8)	rw	0x00	Size of the preamble to be sent (from *TxStartCondition* fulfilled). (MSB byte)
RegPreambleLsb (0x2d)	7-0	PreambleSize(7:0)	rw	0x03	Size of the preamble to be sent (from *TxStartCondition* fulfilled). (LSB byte)
RegSyncConfig (0x2e)	7	SyncOn	rw	1	Enables the Sync word generation and detection: 0 → Off 1 → On
	6	FifoFillCondition	rw	0	FIFO filling condition: 0 → if *SyncAddress* interrupt occurs 1 → as long as *FifoFillCondition* is set
	5-3	SyncSize	rw	011	Size of the Sync word: (*SyncSize* + 1) bytes
	2-0	SyncTol	rw	000	Number of tolerated bit errors in Sync word
RegSyncValue1 (0x2f)	7-0	SyncValue(63:56)	rw	0x01 *	1st byte of Sync word. (MSB byte) Used if *SyncOn* is set.
RegSyncValue2 (0x30)	7-0	SyncValue(55:48)	rw	0x01 *	2nd byte of Sync word Used if *SyncOn* is set and *(SyncSize +1)* >= 2.
RegSyncValue3 (0x31)	7-0	SyncValue(47:40)	rw	0x01 *	3rd byte of Sync word. Used if *SyncOn* is set and *(SyncSize +1)* >= 3.
RegSyncValue4 (0x32)	7-0	SyncValue(39:32)	rw	0x01 *	4th byte of Sync word. Used if *SyncOn* is set and *(SyncSize +1)* >= 4.
RegSyncValue5 (0x33)	7-0	SyncValue(31:24)	rw	0x01 *	5th byte of Sync word. Used if *SyncOn* is set and *(SyncSize +1)* >= 5.
RegSyncValue6 (0x34)	7-0	SyncValue(23:16)	rw	0x01 *	6th byte of Sync word. Used if *SyncOn* is set and *(SyncSize +1)* >= 6.
RegSyncValue7 (0x35)	7-0	SyncValue(15:8)	rw	0x01 *	7th byte of Sync word. Used if *SyncOn* is set and *(SyncSize +1)* >= 7.
RegSyncValue8 (0x36)	7-0	SyncValue(7:0)	rw	0x01 *	8th byte of Sync word. Used if *SyncOn* is set and *(SyncSize +1)* = 8.

Tel: +86-755-82973805 Fax: +86-755-82973550 E-mail: sales@hoperf.com http://www.hoperf.com

RegPacketConfig1 (0x37)	7	PacketFormat	rw	0	Defines the packet format used: 0 → Fixed length 1 → Variable length
	6-5	DcFree	rw	00	Defines DC-free encoding/decoding performed: 00 → None (Off) 01 → Manchester 10 → Whitening 11 → reserved
	4	CrcOn	rw	1	Enables CRC calculation/check (Tx/Rx): 0 → Off 1 → On
	3	CrcAutoClearOff	rw	0	Defines the behavior of the packet handler when CRC check fails: 0 → Clear FIFO and restart new packet reception. No *PayloadReady* interrupt issued. 1 → Do not clear FIFO. *PayloadReady* interrupt issued.
	2-1	AddressFiltering	rw	00	Defines address based filtering in Rx: 00 → None (Off) 01 → Address field must match *NodeAddress* 10 → Address field must match *NodeAddress* or *BroadcastAddress* 11 → reserved
	0	-	rw	0	unused
RegPayloadLength (0x38)	7-0	PayloadLength	rw	0x40	If PacketFormat = 0 (fixed), payload length. If PacketFormat = 1 (variable), max length in Rx, not used in Tx.
RegNodeAdrs (0x39)	7-0	NodeAddress	rw	0x00	Node address used in address filtering.
RegBroadcastAdrs (0x3A)	7-0	BroadcastAddress	rw	0x00	Broadcast address used in address filtering.
RegAutoModes (0x3B)	7-5	EnterCondition	rw	000	Interrupt condition for entering the intermediate mode: 000 → None (AutoModes Off) 001 → Rising edge of *FifoNotEmpty* 010 → Rising edge of *FifoLevel* 011 → Rising edge of *CrcOk* 100 → Rising edge of *PayloadReady* 101 → Rising edge of *SyncAddress* 110 → Rising edge of *PacketSent* 111 → Falling edge of *FifoNotEmpty* (i.e. FIFO empty)
	4-2	ExitCondition	rw	000	Interrupt condition for exiting the intermediate mode: 000 → None (AutoModes Off) 001 → Falling edge of *FifoNotEmpty* (i.e. FIFO empty) 010 → Rising edge of *FifoLevel* or *Timeout* 011 → Rising edge of *CrcOk* or *Timeout* 100 → Rising edge of *PayloadReady* or *Timeout* 101 → Rising edge of *SyncAddress* or *Timeout* 110 → Rising edge of *PacketSent* 111 → Rising edge of *Timeout*
	1-0	IntermediateMode	rw	00	Intermediate mode: 00 → Sleep mode (SLEEP) 01 → Standby mode (STDBY) 10 → Receiver mode (RX) 11 → Transmitter mode (TX)

Tel: +86-755-82973805 Fax: +86-755-82973550 E-mail: sales@hoperf.com http://www.hoperf.com

RegFifoThresh (0x3C)	7	TxStartCondition	rw	1 *	Defines the condition to start packet transmission : 0 → *FifoLevel* (i.e. the number of bytes in the FIFO exceeds *FifoThreshold)* 1 → *FifoNotEmpty* (i.e. at least one byte in the FIFO)
	6-0	FifoThreshold	rw	0001111	Used to trigger *FifoLevel* interrupt.
RegPacketConfig2 (0x3D)	7-4	InterPacketRxDelay	rw	0000	After *PayloadReady* occurred, defines the delay between FIFO empty and the start of a new RSSI phase for next packet. Must match the transmitter's PA ramp-down time. - Tdelay = 0 if *InterpacketRxDelay* >= 12 - Tdelay = ($2^{InterpacketRxDelay}$) / *BitRate* otherwise
	3	-	rw	0	unused
	2	RestartRx	w	0	Forces the Receiver in WAIT mode, in Continuous Rx mode. Always reads 0.
	1	AutoRxRestartOn	rw	1	Enables automatic Rx restart (RSSI phase) after *PayloadReady* occurred and packet has been completely read from FIFO: 0 → Off. *RestartRx* can be used. 1 → On. Rx automatically restarted after *InterPacketRxDelay*.
	0	AesOn	rw	0	Enable the AES encryption/decryption: 0 → Off 1 → On (payload limited to 66 bytes maximum)
RegAesKey1 (0x3E)	7-0	AesKey(127:120)	w	0x00	1st byte of cipher key (MSB byte)
RegAesKey2 (0x3F)	7-0	AesKey(119:112)	w	0x00	2nd byte of cipher key
RegAesKey3 (0x40)	7-0	AesKey(111:104)	w	0x00	3rd byte of cipher key
RegAesKey4 (0x41)	7-0	AesKey(103:96)	w	0x00	4th byte of cipher key
RegAesKey5 (0x42)	7-0	AesKey(95:88)	w	0x00	5th byte of cipher key
RegAesKey6 (0x43)	7-0	AesKey(87:80)	w	0x00	6th byte of cipher key
RegAesKey7 (0x44)	7-0	AesKey(79:72)	w	0x00	7th byte of cipher key
RegAesKey8 (0x45)	7-0	AesKey(71:64)	w	0x00	8th byte of cipher key
RegAesKey9 (0x46)	7-0	AesKey(63:56)	w	0x00	9th byte of cipher key
RegAesKey10 (0x47)	7-0	AesKey(55:48)	w	0x00	10th byte of cipher key
RegAesKey11 (0x48)	7-0	AesKey(47:40)	w	0x00	11th byte of cipher key
RegAesKey12 (0x49)	7-0	AesKey(39:32)	w	0x00	12th byte of cipher key
RegAesKey13 (0x4A)	7-0	AesKey(31:24)	w	0x00	13th byte of cipher key

Tel: +86-755-82973805 Fax: +86-755-82973550 E-mail: sales@hoperf.com http://www.hoperf.com

RegAesKey14 (0x4B)	7-0	AesKey(23:16)	w	0x00	14th byte of cipher key
RegAesKey15 (0x4C)	7-0	AesKey(15:8)	w	0x00	15th byte of cipher key
RegAesKey16 (0x4D)	7-0	AesKey(7:0)	w	0x00	16th byte of cipher key (LSB byte)

6.7. Temperature Sensor Registers

Table 29 Temperature Sensor Registers

Name (Address)	Bits	Variable Name	Mode	Default Value	Description
RegTemp1 (0x4E)	7-4	-	r	0000	unused
	3	TempMeasStart	w	0	Triggers the temperature measurement when set. Always reads 0.
	2	TempMeasRunning	r	0	Set to 1 while the temperature measurement is running. Toggles back to 0 when the measurement has completed. The receiver can not be used while measuring temperature
	1-0	-	r	01	unused
RegTemp2 (0x4F)	7-0	TempValue	r	-	Measured temperature -1°C per Lsb Needs calibration for accuracy

6.8. Test Registers

Table 30 Test Registers

Name (Address)	Bits	Variable Name	Mode	Default Value	Description
RegTestLna (0x58)	7-0	SensitivityBoost	rw	0x1B	High sensitivity or normal sensitivity mode: 0x1B → Normal mode 0x2D → High sensitivity mode
RegTestPa1 (0x5A)	7-0	Pa13dBm1	rw	0x55	Set to 0x5D for +13 dBm operation 0x55 → Normal mode and Rx mode 0x5D → +13 dBm mode Revert to 0x55 when receiving or using PA0
RegTestPa2 (0x5C)	7-0	Pa13dBm2	rw	0x70	Set to 0x7C for +13 dBm operation 0x70 → Normal mode and Rx mode 0x7C → +13 dBm mode Revert to 0x70 when receiving or using PA0
RegTestDagc (0x6F)	7-0	ContinuousDagc	rw	0x30 *	Fading Margin Improvement, refer to 3.4.4 0x00 → Normal mode 0x20 → Improved margin, use if *AfcLowBetaOn=1* 0x30 → Improved margin, use if *AfcLowBetaOn=0*
RegTestAfc (0x71)	7-0	LowBetaAfcOffset	rw	0x00	AFC offset set for low modulation index systems, used if *AfcLowBetaOn=1*. *Offset = LowBetaAfcOffset x 488 Hz*

Tel: +86-755-82973805 Fax: +86-755-82973550 E-mail: sales@hoperf.com http://www.hoperf.com

7. Application Information

7.1. Crystal Resonator Specification

Table 31 shows the crystal resonator specification for the crystal reference oscillator circuit of the RFM69C. This specification covers the full range of operation of the RFM69C and is employed in the reference design.

Table 31 Crystal Specification

Symbol	Description	Conditions	Min	Typ	Max	Unit
FXOSC	XTAL Frequency		26	-	32	MHz
RS	XTAL Serial Resistance		-	30	140	ohms
C0	XTAL Shunt Capacitance		-	2.8	7	pF
CLOAD	External Foot Capacitance	On each pin XTA and XTB	8	16	22	pF

Notes - the initial frequency tolerance, temperature stability and ageing performance should be chosen in accordance with the target operating temperature range and the receiver bandwidth selected.

- the loading capacitance should be applied externally, and adapted to the actual Cload specification of the XTAL.

- A minimum XTAL frequency of 28 MHz is required to cover the 863-870 MHz band, 29 MHz for the 902-928 MHz band

7.2. Reset of the Module

A power-on reset of the RFM69C is triggered at power up. Additionally, a manual reset can be issued by controlling pin RESET.

7.2.1. POR

If the application requires the disconnection of VDD from the RFM69C, despite of the extremely low Sleep Mode current, the user should wait for 10 ms from of the end of the POR cycle before commencing communications over the SPI bus. Pin 6 (Reset) should be left floating during the POR sequence.

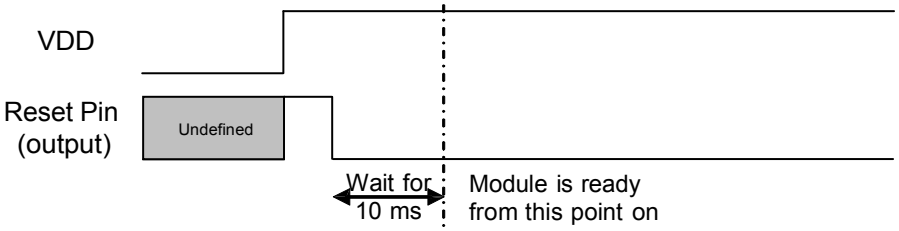

Figure 39. POR Timing Diagram

Please note that any CLKOUT activity can also be used to detect that the module is ready.

Tel: +86-755-82973805 Fax: +86-755-82973550 E-mail: sales@hoperf.com http://www.hoperf.com

7.2.2. Manual Reset

A manual reset of the RFM69C is possible even for applications in which VDD cannot be physically disconnected. The RESET pin should be pulled high for a hundred microseconds, and then released. The user should then wait for 5 ms before using the module.

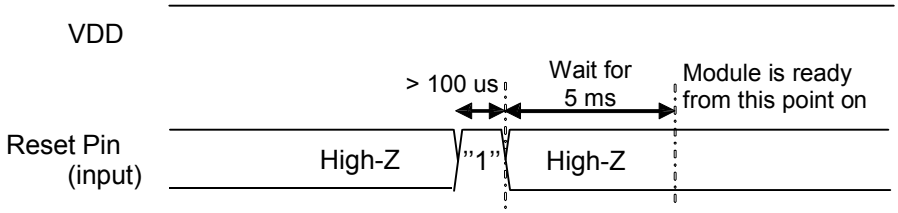

Figure 40. Manual Reset Timing Diagram

Note whilst pin RESET is driven high, an over current consumption of up to ten milliamps can be seen on VDD.

7.3. Reference Design

Please contact your representative for evaluation tools, reference designs and design assistance. Note that all schematics shown in this section are full schematics, listing ALL required components, including decoupling capacitors.

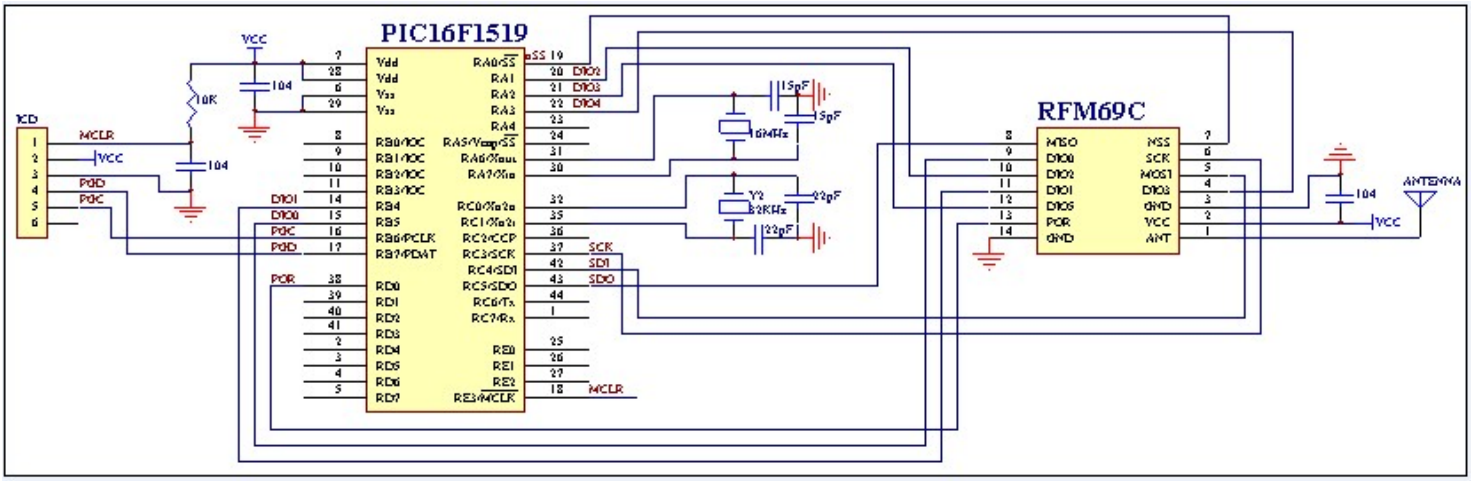

Figure 41. +13dBm Schematic

Tel: +86-755-82973805 Fax: +86-755-82973550 E-mail: sales@hoperf.com http://www.hoperf.com

8. Packaging Information

8.1. S2 Package Outline Drawing

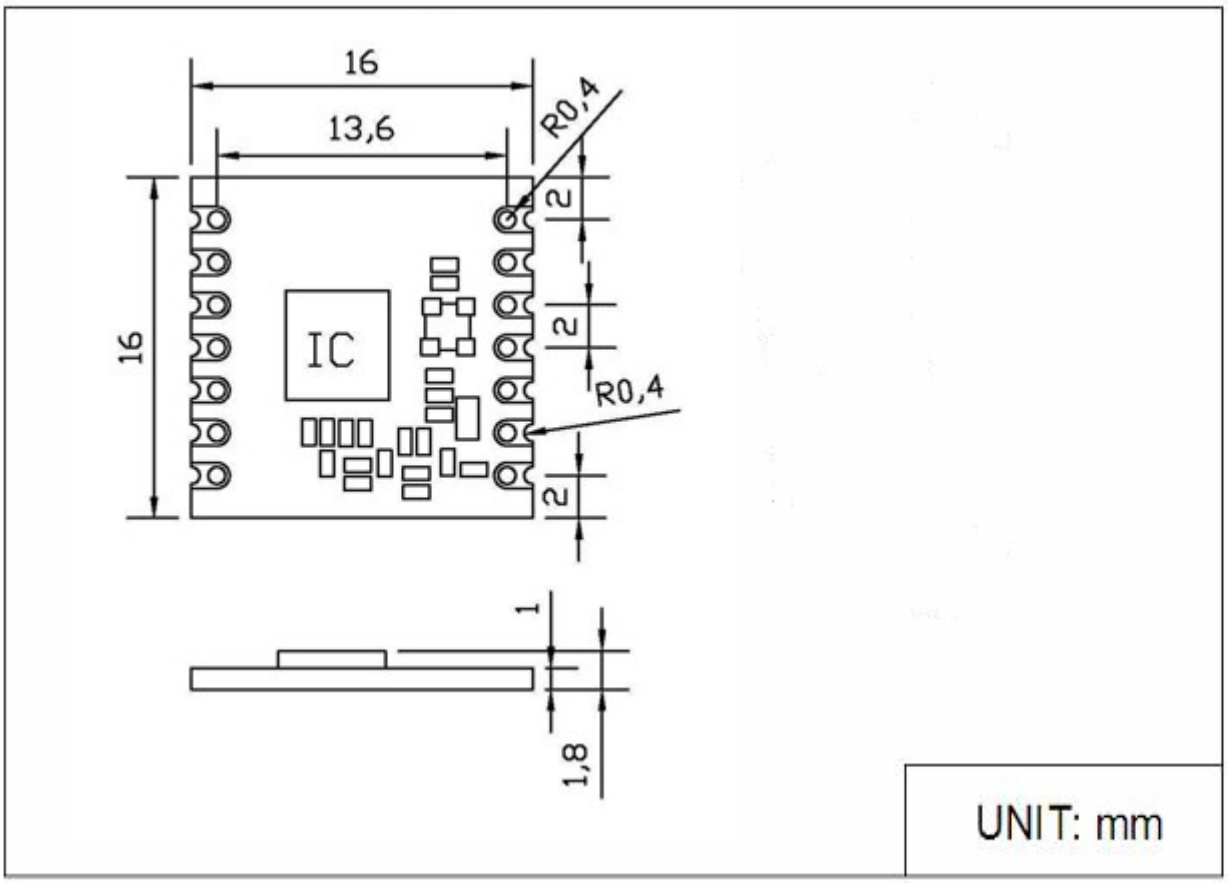

Figure 42: S2 Packaging Outline Drawing

Tel: +86-755-82973805 Fax: +86-755-82973550 E-mail: sales@hoperf.com http://www.hoperf.com

9. Ordering Information

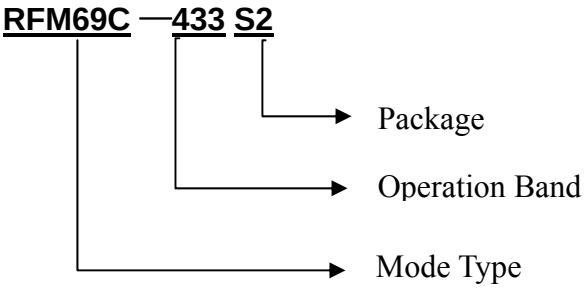

P/N: RFM69C-315S2
RFM69C module at 315MHz band, SMD Package
P/N: RFM69C-433S2
RFM69C module at 433MHz band, SMD Package
P/N: RFM69C-868S2
RFM69C module at 868MHz band, SMD Package
P/N: RFM69C-915S2
RFM69C module at 915MHz band, SMD Package

HOPE MICROELECTRONICS CO.,LTD
Add: 2/F, Building 3, Pingshan Private Enterprise Science and Technology Park, Lishan Road, XiLi Town, Nanshan District, Shenzhen, Guangdong, China
Tel: 86-755-82973805
Fax: 86-755-82973550
Email: sales@hoperf.com
Website: http://www.hoperf.com
http://www.hoperf.cn

This document may contain preliminary information and is subject to change by Hope Microelectronics without notice. Hope Microelectronics assumes no responsibility or liability for any use of the information contained herein. Nothing in this document shall operate as an express or implied license or indemnity under the intellectual property rights of Hope Microelectronics or third parties. The products described in this document are not intended for use in implantation or other direct life support applications where malfunction may result in the direct physical harm or injury to persons. NO WARRANTIES OF ANY KIND, INCLUDING, BUT NOT LIMITED TO, THE IMPLIED WARRANTIES OF MECHANTABILITY OR FITNESS FOR A ARTICULAR PURPOSE, ARE OFFERED IN THIS DOCUMENT.

©2006, HOPE MICROELECTRONICS CO.,LTD. All rights reserved.

ENTEGRECİ

Bu belge www.entegreci.com üzerinden sunulmaktadır.

Elektronik komponent tedarikinde Entegreci

Entegreci, Eskişehir merkezli, Türkiye geneline satış yapan bir elektronik komponent mağazasıdır. Entegreler (IC), mikrodenetleyiciler, transistörler, diyotlar, pasif elemanlar, konnektörler, modüller ve geliştirme kartları tek adetten seri üretim adetlerine kadar satılır. Ürün sayfalarında güncel stok durumunu, fiyatı ve datasheet bağlantısını bulabilirsiniz.

Parça koduyla arama

Üretici parça numarasını yazın; stok ve fiyatı hemen görün.

www.entegreci.com

Ürün kategorileri

Entegreden kapasitöre tüm elektronik komponent kategorileri.

Kategorilere göz atın

Üreticiler

Aradığınız üreticinin ürünlerini tek sayfada inceleyin.

Üreticileri görün

Toplu alım ve teklif

Listede olmayan ya da yüksek adetli parçalar için teklif isteyin.

Teklif isteyin

www.entegreci.com | **destek@entegreci.com** | **0850 305 90 34**

Entegreci is an online electronic components store based in Türkiye. Search by manufacturer part number to see stock, prices and datasheets for integrated circuits, microcontrollers, transistors, passive components and connectors, or request a quote for parts that are not listed.

Bu sayfa Entegreci tarafından eklenmiştir. Belgenin önceki sayfaları asıl yayıncısına aittir ve içeriği değiştirilmemiştir; en güncel sürüm için belgenin yayıncısına başvurun.