FSDH321, FSDL321

Green Mode Fairchild Power Switch (FPS™)

Features

- Internal Avalanche Rugged Sense FET
- Consumes only 0.65W at 240VAC & 0.3W load with Advanced Burst-Mode Operation
- Frequency Modulation for low EMI
- Precision Fixed Operating Frequency
- Internal Start-up Circuit
- Pulse by Pulse Current Limiting
- Abnormal Over Current Protection
- Over Voltage Protection
- Over Load Protection
- Internal Thermal Shutdown Function
- Auto-Restart Mode
- Under Voltage Lockout
- Low Operating Current (max 3mA)
- Adjustable Peak Current Limit
- Built-in Soft Start

Applications

- SMPS for STB, Low cost DVD
- Auxiliary Power for PC
- Adaptor for Charger

Description

The FSDx321(x stands for H, L) are integrated Pulse Width Modulators (PWM) and Sense FETs specifically designed for high performance offline Switch Mode Power Supplies (SMPS) with minimal external components. Both devices are integrated high voltage power switching regulators which combine an avalanche rugged Sense FET with a current mode PWM control block. The integrated PWM controller features include: a fixed oscillator with frequency modulation for reduced EMI, Under Voltage Lock Out (UVLO) protection, Leading Edge Blanking (LEB), optimized gate turn-on/turn-off driver, Thermal Shut Down (TSD) protection, Abnormal Over Current Protection (AOCP) and temperature compensated precision current sources for loop compensation and fault protection circuitry. When compared to a discrete MOSFET and controller or RCC switching converter solution, the FSDx321 reduce total component count, design size, weight and at the same time increase efficiency, productivity, and system reliability. Both devices are a basic platform well suited for cost effective designs of flyback converters.

OUTPUT POWER TABLE				
PRODUCT	230VAC ±15%(3)		85-265VAC	
	Adapter(1)	Open Frame(2)	Adapter(1)	Open Frame(2)
FSDL321	11W	17W	8W	12W
FSDH321	11W	17W	8W	12W
FSDL0165RN	13W	23W	11W	17W
FSDM0265RN	16W	27W	13W	20W
FSDH0265RN	16W	27W	13W	20W
FSDL0365RN	19W	30W	16W	24W
FSDM0365RN	19W	30W	16W	24W
FSDL321L	11W	17W	8W	12W
FSDH321L	11W	17W	8W	12W
FSDL0165RL	13W	23W	11W	17W
FSDM0265RL	16W	27W	13W	20W
FSDH0265RL	16W	27W	13W	20W
FSDL0365RL	19W	30W	16W	24W
FSDM0365RL	19W	30W	16W	24W

Table 1. Notes: 1. Typical continuous power in a non-ventilated enclosed adapter with sufficient drain pattern or something as a heat sinker measured at 50°C ambient. 2. Maximum practical continuous power in an open frame design with sufficient drain pattern or something as a heat sinker at 50°C ambient. 3. 230 VAC or 100/115 VAC with doubler.

Typical Circuit

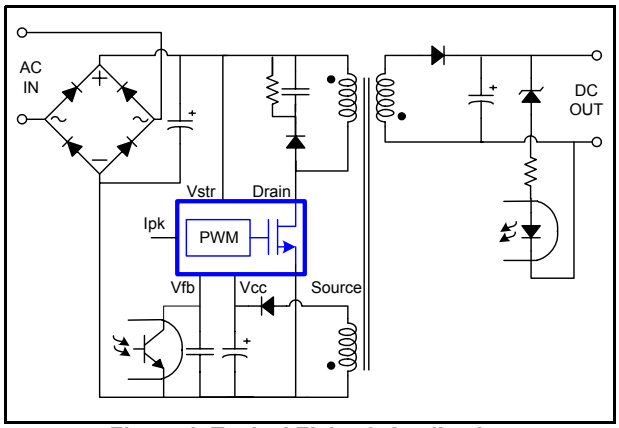

Figure 1. Typical Flyback Application

©2005 Fairchild Semiconductor Corporation

Internal Block Diagram

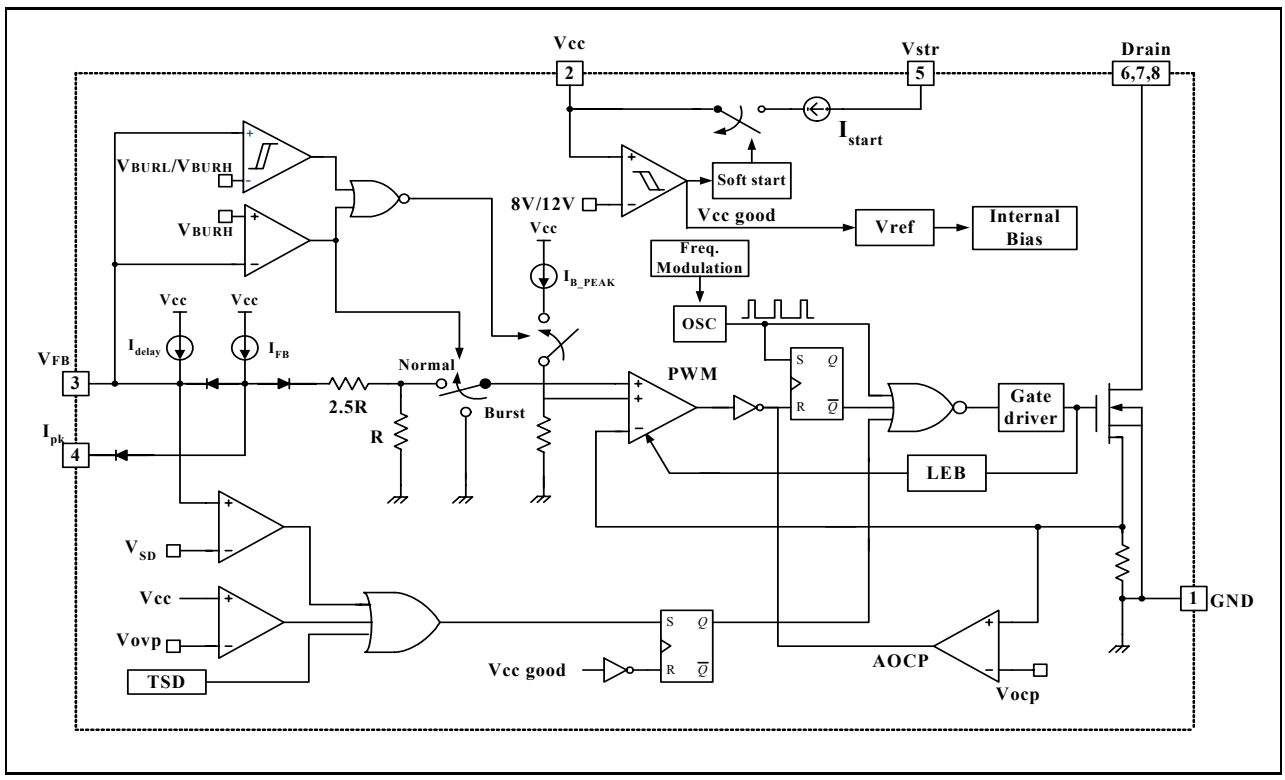

Figure 2. Functional Block Diagram of FSDx321

Pin Definitions

Pin Number	Pin Name	Pin Function Description
1	GND	Sense FET source terminal on primary side and internal control ground.
2	Vcc	Positive supply voltage input. Although connected to an auxiliary transformer winding, current is supplied from pin 5 (Vstr) via an internal switch during startup (see Internal Block Diagram section). It is not until Vcc reaches the UVLO upper threshold (12V) that the internal start-up switch opens and device power is supplied via the auxiliary transformer winding.
3	Vfb	The feedback voltage pin is the non-inverting input to the PWM comparator. It has a 0.9mA current source connected internally while a capacitor and optocoupler are typically connected externally. A feedback voltage of 6V triggers over load protection (OLP). There is a time delay while charging between 3V and 6V using an internal 5uA current source, which prevents false triggering under transient conditions but still allows the protection mechanism to operate under true overload conditions.
4	Ipk	Pin to adjust the current limit of the Sense FET. The feedback 0.9mA current source is diverted to the parallel combination of an internal 2.8kΩ resistor and any external resistor to GND on this pin to determine the current limit. If this pin is tied to Vcc or left floating, the typical current limit will be 0.7A.
5	Vstr	This pin connects directly to the rectified AC line voltage source. At start up the internal switch supplies internal bias and charges an external storage capacitor placed between the Vcc pin and ground. Once the Vcc reaches 12V, the internal switch is disabled.
6, 7, 8	Drain	The Drain pin is designed to connect directly to the primary lead of the transformer and is capable of switching a maximum of 650V. Minimizing the length of the trace connecting this pin to the transformer will decrease leakage inductance.

Pin Configuration

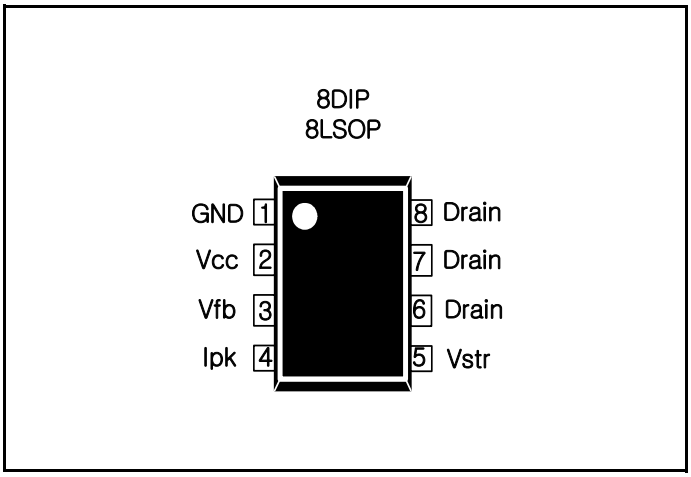

Figure 3. Pin Configuration (Top View)

Absolute Maximum Ratings

(Ta=25°C, unless otherwise specified)

Parameter	Symbol	Value	Unit
Maximum Vstr Pin Voltage	$V_{STR,MAX}$	650	V
Maximum Drain Pin Voltage	$V_{DRAIN,MAX}$	650	V
Drain-Gate Voltage (R_{GS}=1MΩ)	V_{DGR}	650	V
Gate-Source (GND) Voltage	V_{GS}	±20	V
Drain Current Pulsed (1)	I_{DM}	1.5	A_{DC}
Continuous Drain Current (Tc=25°C)	I_D	0.7	A_{DC}
Continuous Drain Current (Tc=100°C)	I_D	0.32	A_{DC}
Single Pulsed Avalanche Energy (2)	E_{AS}	10	mJ
Maximum Supply Voltage	$V_{CC,MAX}$	20	V
Input Voltage Range	V_{FB}	−0.3 to V_{CC}	V
Total Power Dissipation	P_D	1.40	W
Operating Junction Temperature.	T_J	Internally limited	°C
Operating Ambient Temperature.	T_A	-25 to +85	°C
Storage Temperature Range.	T_{STG}	-55 to +150	°C

Note:

1. Repetitive rating: Pulse width limited by maximum junction temperature
2. L = 24mH, starting Tj = 25°C

Thermal Impedance

Parameter	Symbol	Value	Unit
8DIP			
Junction-to-Ambient Thermal	θ_{JA}(1)	88.84(3)	°C/W
Junction-to-Case Thermal	θ_{JC}(2)	13.94	°C/W

Note:

1. Free standing without heatsink.
2. Measured on the Drain pin close to plastic interface.
3. Without copper clad.

* - all items are tested with the standard JESD 51-10(DIP)

Electrical Characteristics (Sense FET Part)

(Ta = 25°C unless otherwise specified)

Parameter	Symbol	Condition	Min.	Typ.	Max.	Unit
Sense FET SECTION						
Zero Gate Voltage Drain Current	I_{DSS}	V_{DS}=Max. Rating, V_{GS}=0V	-	-	25	μA
		V_{DS}=0.8Max. Rating, V_{GS}=0V, T_C=125°C	-	-	200	μA
Static Drain-Source on Resistance (Note)	$R_{DS(ON)}$	V_{GS}=10V, I_D=0.5A	-	14	19	Ω
Forward Trans conductance (Note)	gfs	V_{DS}=50V, I_D=0.5A	1.0	1.3	-	S
Input Capacitance	C_{ISS}	V_{GS}=0V, V_{DS}=25V, f=1MHz	-	162	-	pF
Output Capacitance	C_{OSS}		-	18	-	
Reverse Transfer Capacitance	C_{RSS}		-	3.8	-	
Turn on Delay Time	td(on)	V_{DD}=0.5B V_{DSS}, I_D=1.0A (MOSFET switching time is essentially independent of operating temperature)	-	9.5	-	ns
Rise Time	tr		-	19	-	
Turn Off Delay Time	td(off)		-	33	-	
Fall Time	tf		-	42	-	
Total Gate Charge (Gate-Source + Gate-Drain)	Qg	V_{GS}=10V, I_D=1.0A, V_{DS}=0.5B V_{DSS} (MOSFET switching time is essentially independent of operating temperature)	-	7.0	-	nC
Gate-Source Charge	Qgs		-	3.1	-	
Gate-Drain (Miller) Charge	Qgd		-	0.4	-	

Note:

1. Pulse test: Pulse width ≤ 300μS, duty ≤ 2%
2. $S = \frac{1}{R}$

Electrical Characteristics (Control Part) (Continued)

(Ta=25°C unless otherwise specified)

Parameter	Symbol	Condition	Min.	Typ.	Max.	Unit
UVLO SECTION						
Start Threshold Voltage	V_{START}	V_{FB}=GND	11	12	13	V
Stop Threshold Voltage	V_{STOP}	V_{FB}=GND	7	8	9	V
OSCILLATOR SECTION						
Initial Accuracy	F_{OSC}	**FSDH321**	90	100	110	kHz
Frequency Modulation	F_{MOD}		±2.5	±3	±3.5	
Initial Accuracy	F_{OSC}	**FSDL321**	45	50	55	kHz
Frequency Modulation	F_{MOD}		±1.0	±1.5	±2.0	
Frequency Change With Temperature (2)	$\Delta F/\Delta T$	-25°C ≤ Ta ≤ +85°C	-	±5	±10	%
Maximum Duty Cycle	Dmax	**FSDH321**	62	67	72	%
		FSDL321	71	77	83	%
FEEDBACK SECTION						
Feedback Source Current	I_{FB}	Ta=25°C, Vfb = 0V	0.70	0.90	1.1	mA
Shutdown Feedback Voltage	V_{SD}		5.5	6.0	6.5	V
Shutdown Delay Current	I_{DELAY}	Ta=25°C, Vfb = 4V	3.5	5.0	6.5	μA
BURST MODE SECTION						
Burst Mode Voltage	V_{BURH}	Tj = 25°C	0.4	0.5	0.6	V
	V_{BURL}		0.25	0.35	0.45	V
	Hysteresis		-	150	-	mV
CURRENT LIMIT(SELF-PROTECTION)SECTION						
Peak Current Limit(3)	I_{LIM}	Tj = 25°C	0.60	0.70	0.80	A
Current Limit Delay(1)	T_{CLD}	Tj = 25°C	-	600	-	ns
SOFT START SECTION						
Soft Start Time	T_{SS}	Vfb = 4V	10	15	20	ms
PROTECTION SECTION						
Thermal Shutdown Temperature (1)	T_{SD}	-	125	145	-	°C
Over Voltage Protection	V_{OVP}		18	19	20	V
TOTAL STANDBY CURRENT SECTION						
Startup Charging Current	I_{CH}	V_{CC}=0V	0.7	0.85	1.0	mA
Operating Supply Current (Control Part Only)	I_{OP}	V_{CC} = 14V, Vfb = 0V	1	3	5	mA

Note:

1. These parameters, although guaranteed, are not 100% tested in production
2. These parameters, although guaranteed, are tested in EDS (wafer test) process
3. di/dt = 250mA/uS

Comparison Between FSDM311 and FSDx321

Function	FSDM311	FSDx321	FSDx321 Advantages
Soft-Start	15mS	15mS	• Gradually increasing current limit during soft-start further reduces peak current and voltage component stresses • Eliminates external components used for soft-start in most applications • Reduces or eliminates output overshoot
External Current Limit	not applicable	Programmable of default current limit	• Smaller transformer • Allows power limiting (constant over-load power) • Allows use of larger device for lower losses and higher efficiency.
Frequency Modulation	not applicable	±1.5KHz @50KHz ±3.0KHz @100KHz	• Reduced conducted EMI
Burst Mode Operation	Yes-built into controller	Yes-built into controller	• Improve light load efficiency • Reduces no-load consumption • Transformer audible noise reduction
Drain Creepage at Package	7.62mm	7.62mm	• Greater immunity to arcing as a result of build-up of dust, debris and other contaminants

Typical Performance Characteristics (Control Part)

(These characteristic graphs are normalized at Ta = 25°C)

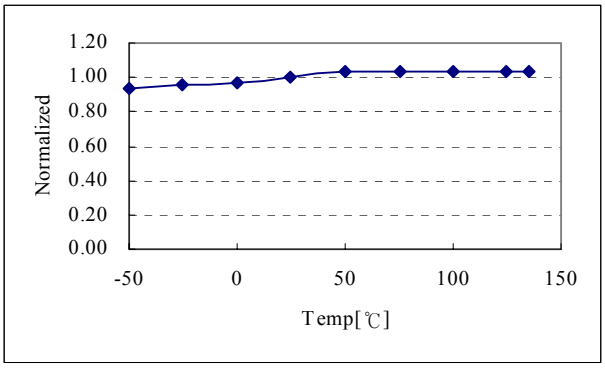

Operating Frequency (Fosc)

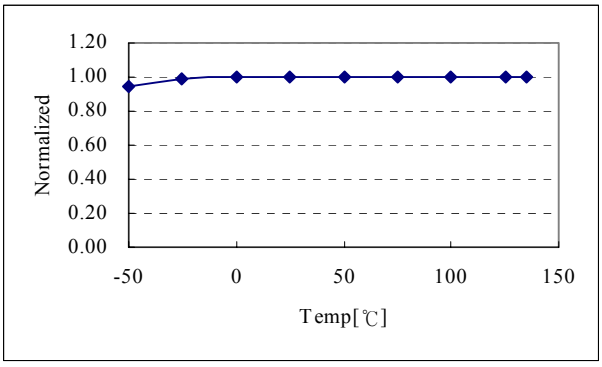

Frequency Modulation (FMOD)

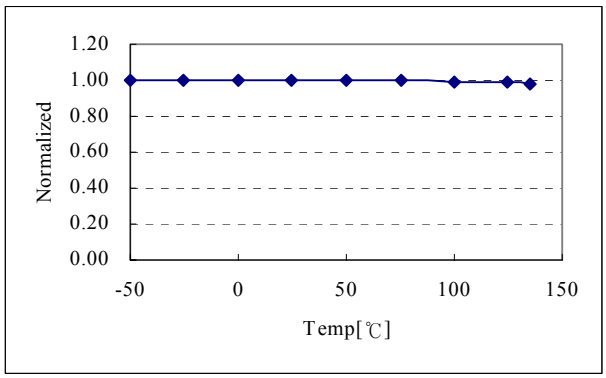

Maximum duty cycle (Dmax)

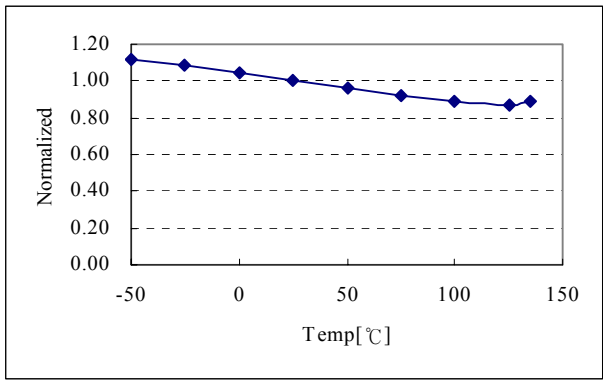

Operating supply current (Iop)

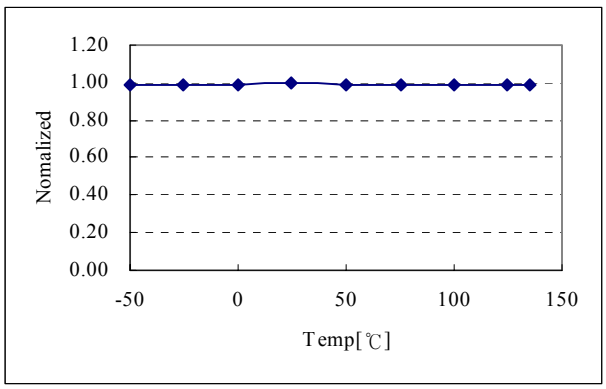

Start Threshold Voltage (Vstart)

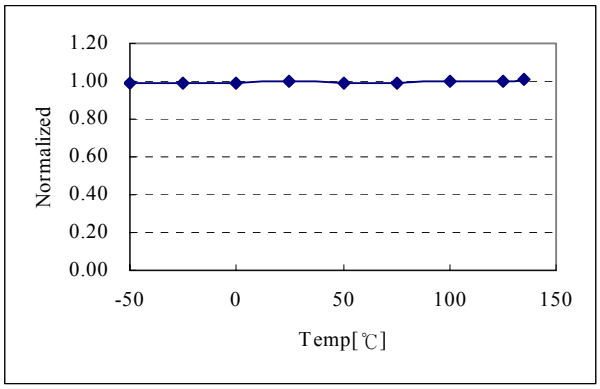

Stop Threshold Voltage (Vstop)

Typical Performance Characteristics (Continued)

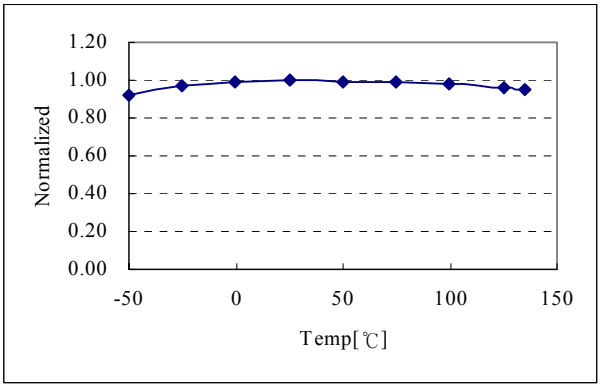

Feedback Source Current (Ifb)

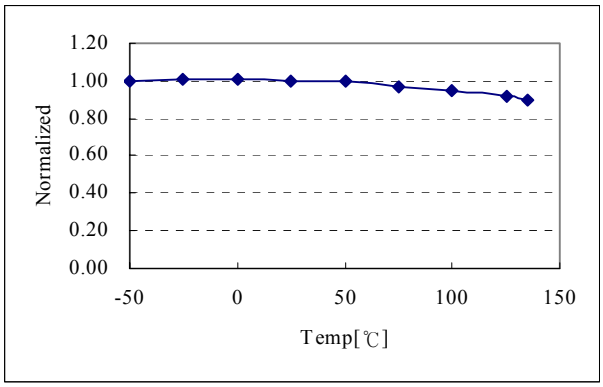

Peak current limit (I_{LIM})

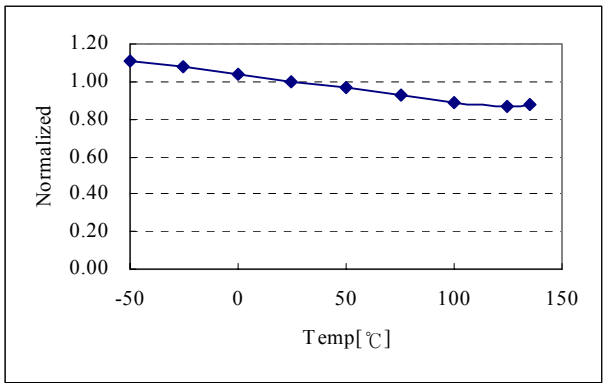

Start up Current (Istart)

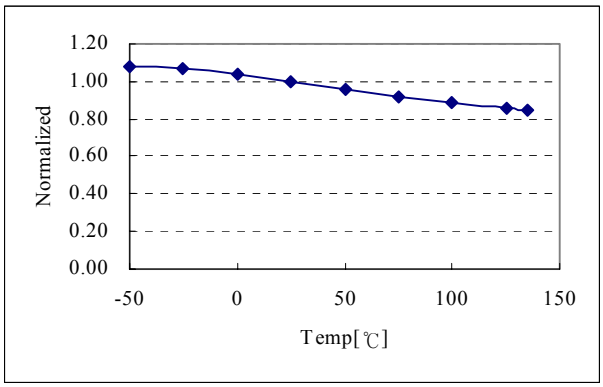

Startup Charging Current (Ich)

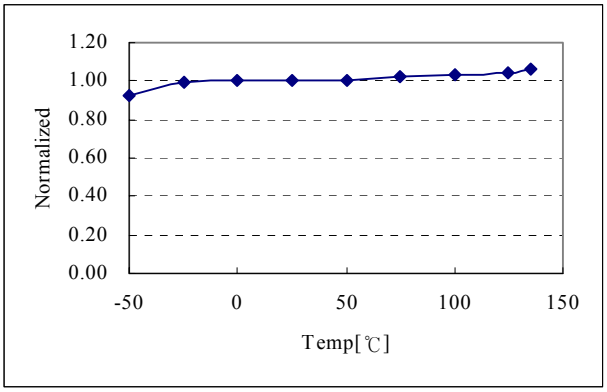

Burst peak current (Iburst)

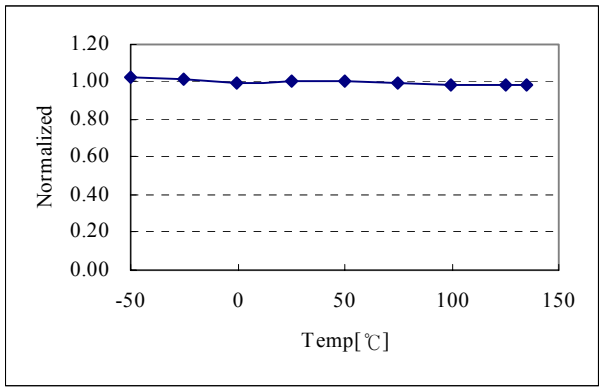

Over Voltage Protection (Vovp)

Functional Description

1. Startup : In previous generations of Fairchild Power Switches (FPS^{TM}) the Vstr pin had an external resistor to the DC input voltage line. In this generation the startup resistor is replaced by an internal high voltage current source and a switch that shuts off when 15mS goes by after the supply voltage, Vcc, gets above 12V. The source turns back on if Vcc drops below 8V.

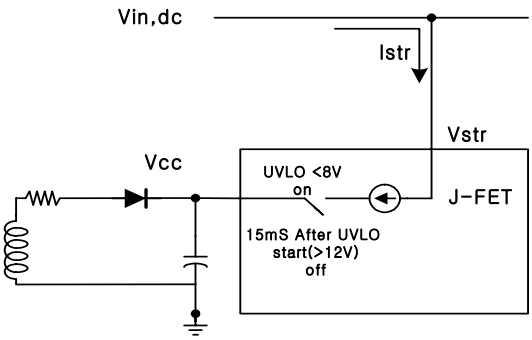

Figure 4. High voltage current source

2. Feedback Control : The FSDx321 employs current mode control, shown in figure 5. An opto-coupler (such as the H11A817A) and shunt regulator (such as the KA431) are typically used to implement the feedback network. Comparing the feedback voltage with the voltage across the Rsense resistor plus an offset voltage makes it possible to control the switching duty cycle. When the reference pin voltage of the KA431 exceeds the internal reference voltage of 2.5V, the H11A817A LED current increases, thus pulling down the feedback voltage and reducing the duty cycle. This event typically happens when the input voltage is increased or the output load is decreased.

3. Leading edge blanking (LEB) : At the instant the internal Sense FET is turned on, there usually exists a high current spike through the Sense FET, caused by the primary side capacitance and secondary side rectifier diode reverse recovery. Excessive voltage across the Rsense resistor would lead to incorrect feedback operation in the current mode PWM control. To counter this effect, the FPS^{TM} employs a leading edge blanking (LEB) circuit. This circuit inhibits the PWM comparator for a short time (T_{LEB}) after the Sense FET is turned on.

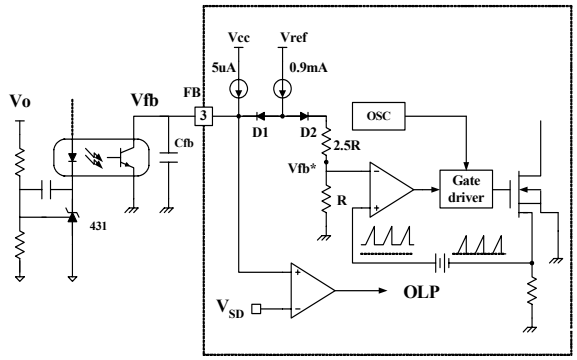

Figure 5. Pulse width modulation (PWM) circuit

4. Protection Circuit : The FPS^{TM} has several protective functions such as over load protection (OLP), over voltage protection (OVP), abnormal over current protection (AOCP), under voltage lock out (UVLO) and thermal shutdown (TSD). Because these protection circuits are fully integrated inside the IC without external components, the reliability is improved without increasing cost. Once the fault condition occurs, switching is terminated and the Sense FET remains off. This causes Vcc to fall. When Vcc reaches the UVLO stop voltage, 8V, the protection is reset and the internal high voltage current source charges the Vcc capacitor via the Vstr pin. When Vcc reaches the UVLO start voltage,12V, the FPS^{TM} resumes its normal operation. In this manner, the auto-restart can alternately enable and disable the switching of the power Sense FET until the fault condition is eliminated.

4.1 Over Load Protection (OLP) : Overload is defined as the load current exceeding a pre-set level due to an unexpected event. In this situation, the protection circuit should be activated in order to protect the SMPS. However, even when the SMPS is in the normal operation, the over load protection circuit can be activated during the load transition. In order to avoid this undesired operation, the over load protection circuit is designed to be activated after a specified time to determine whether it is a transient situation or an overload situation. In conjunction with the Ipk current limit pin (if used) the current mode feedback path would limit the current in the Sense FET when the maximum PWM duty cycle is attained. If the output consumes more than this maximum power, the output voltage (Vo) decreases below the set voltage. This reduces the current through the opto-coupler LED, which also reduces the opto-coupler transistor current, thus increasing the feedback voltage (Vfb). If Vfb exceeds 3V, the feedback input diode is blocked and the 5uA Idelay current source starts to charge Cfb slowly up to Vcc. In this condition, Vfb continues increasing until it reaches 6V, when the switching operation is terminated as shown in figure 6. The delay time for shutdown is the time required to charge

Cfb from 3V to 6V with 5uA.

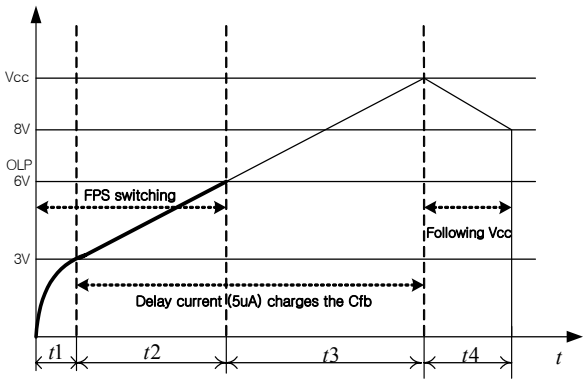

$$t1 = -\frac{1}{RC_{fb}} In\,(1 - \frac{V(t1)}{R}); V(t1) = 3V, R = 2.8K\Omega, C_{fb} = C_{fb_fig.2}$$

$$t2 = C_{fb}\frac{(V(t1+t2) - V(t1))}{I_{delay}}; I_{delay} = 5uA, V(t1+t2) - V(t1) = 3V$$

Figure 6. Over load protection

4.2 Thermal Shutdown (TSD) : The Sense FET and the control IC are integrated, making it easier for the control IC to detect the temperature of the Sense FET. When the temperature exceeds approximately 140°C, thermal shutdown is activated.

4.3 Abnormal Over Current Protection (AOCP) :

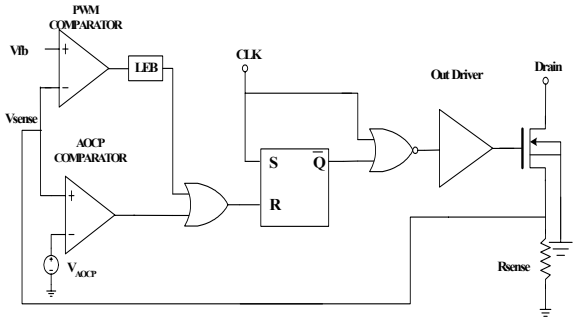

Figure 7. AOCP Function & Block

Even though the FPS^{TM} has OLP (Over Load Protection) and current mode PWM feedback, these are not enough to protect the FPS^{TM} when a secondary side diode short or a transformer pin short occurs. In addition to start-up, soft-start is also activated at each restart attempt during auto-restart and when restarting after latch mode is activated. The FPS^{TM} has an internal AOCP (Abnormal Over Current Protection) circuit as shown in figure 7. When the gate turn-on signal is applied to the power Sense FET, the AOCP block is enabled and monitors the current through the sensing resistor. The voltage across the resistor is then compared with a preset AOCP level. If the sensing resistor voltage is greater than the AOCP level, pulse by pulse AOCP is triggered regardless of uncontrollable LEB time. Here, pulse by pulse AOCP stops Sense FET within 350nS after it is activated.

4.4 Over Voltage Protection (OVP) : In case of malfunction in the secondary side feedback circuit, or feedback loop open caused by a defect of solder, the current through the opto-coupler transistor becomes almost zero. Then, Vfb climbs up in a similar manner to the over load situation, forcing the preset maximum current to be supplied to the SMPS until the over load protection is activated. Because excess energy is provided to the output, the output voltage may exceed the rated voltage before the over load protection is activated, resulting in the breakdown of the devices in the secondary side. In order to prevent this situation, an over voltage protection (OVP) circuit is employed. In general, Vcc is proportional to the output voltage and the FPS^{TM} uses Vcc instead of directly monitoring the output voltage. If V_{CC} exceeds 19V, OVP circuit is activated resulting in termination of the switching operation. In order to avoid undesired activation of OVP during normal operation, Vcc should be properly designed to be below 19V.

5. Soft Start : The FPS^{TM} has an internal soft start circuit that increases the feedback voltage together with the Sense FET current slowly after it starts up. The typical soft start time is 15msec, as shown in figure 8, where progressive increments of Sense FET current are allowed during the start-up phase. The pulse width to the power switching device is progressively increased to establish the correct working conditions for transformers, inductors, and capacitors. The voltage on the output capacitors is progressively increased with the intention of smoothly establishing the required output voltage. It also helps to prevent transformer saturation and reduce the stress on the secondary diode.

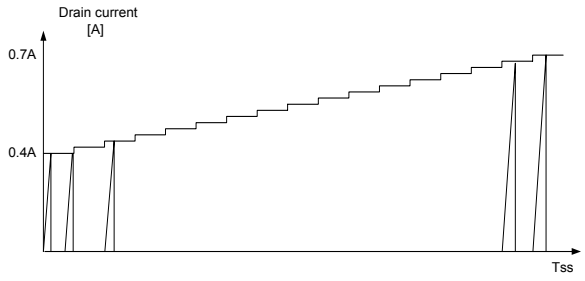

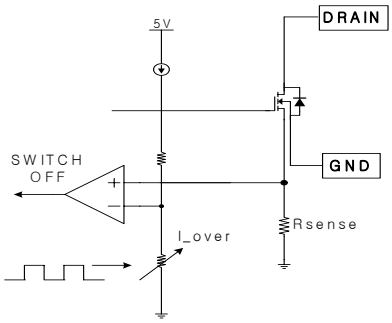

Figure 8. Soft Start Function

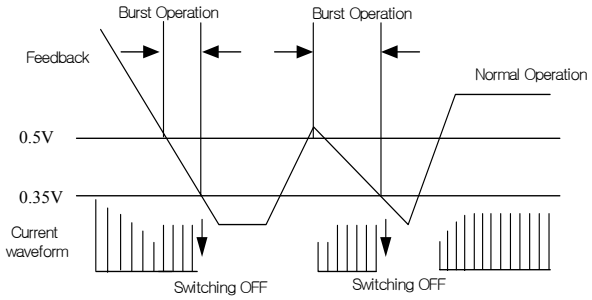

Figure 10. Circuit for Burst Operation

6. Burst operation : In order to minimize power dissipation in standby mode, the FPS^{TM} enters burst mode operation.

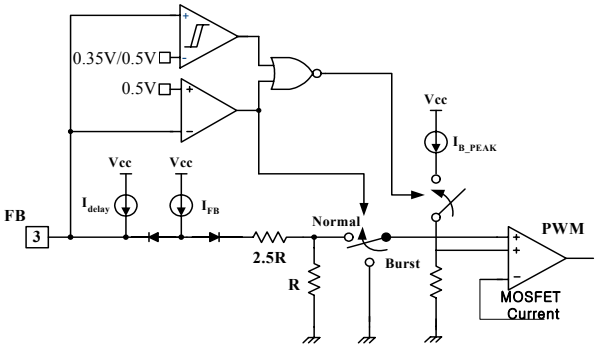

Figure 9. Circuit for Burst operation

As the load decreases, the feedback voltage decreases. As shown in figure 10, the device automatically enters burst mode when the feedback voltage drops below V_{BURH}(500mV). Switching still continues but the current limit is set to a fixed limit internally to minimize flux density in the transformer. The fixed current limit is larger than that defined by Vfb = V_{BURH} and therefore, Vfb is driven down further. Switching continues until the feedback voltage drops below V_{BURL}(350mV). At this point switching stops and the output voltages start to drop at a rate dependent on the standby current load. This causes the feedback voltage to rise. Once it passes V_{BURH}(500mV) switching resumes. The feedback voltage then falls and the process repeats. Burst mode operation alternately enables and disables switching of the power Sense FET thereby reducing switching loss in Standby mode.

7. Frequency Modulation : EMI reduction can be accomplished by modulating the switching frequency of a switched power supply. Frequency modulation can reduce EMI by spreading the energy over a wider frequency range than the band width measured by the EMI test equipment. The amount of EMI reduction is directly related to the depth of the reference frequency. As can be seen in Figure 11, the frequency changes from 97KHz to 100KHz (from 48.5KHz to 51.5KHz for FSDL321)in 4mS for the FSDH321. Frequency modulation allows the use of a cost effective inductor instead of an AC input mode choke to satisfy the requirements of world wide EMI limits.

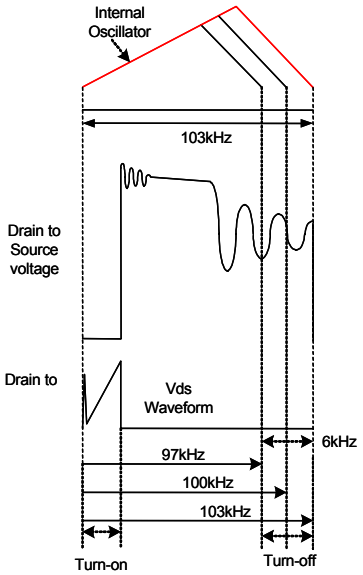

Figure 11. Frequency Modulation Waveform for FSDH321

8. Adjusting Current limit function: As shown in fig 12, a combined 2.8kΩ internal resistance is connected into the non-inverting lead on the PWM comparator. A external resistance of A on the current limit pin forms a parallel resistance with the 2.8kΩ when the internal diodes are biased by the main current source of 900uA.

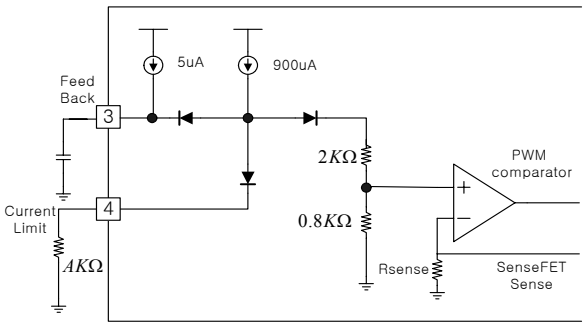

Figure 12. Peak current adjustment

For example, FSDH321 has a typical Sense FET current limit (I_{LIM}) of 0.7A. The Sense FET current can be limited to 0.5 by inserting a 7kΩ between the current limit pin and ground which is derived from the following equations:

0.7: 0.5 = 2.8kΩ : XkΩ ,

X = 2kΩ,

Since X represents the resistance of the parallel network, A can be calculated using the following equation:

A = X / (1 - (X/2.8kΩ))

Layout Considerations

Typical application circuit

1. PC Auxiliary Power Circuit (10W Output Power)

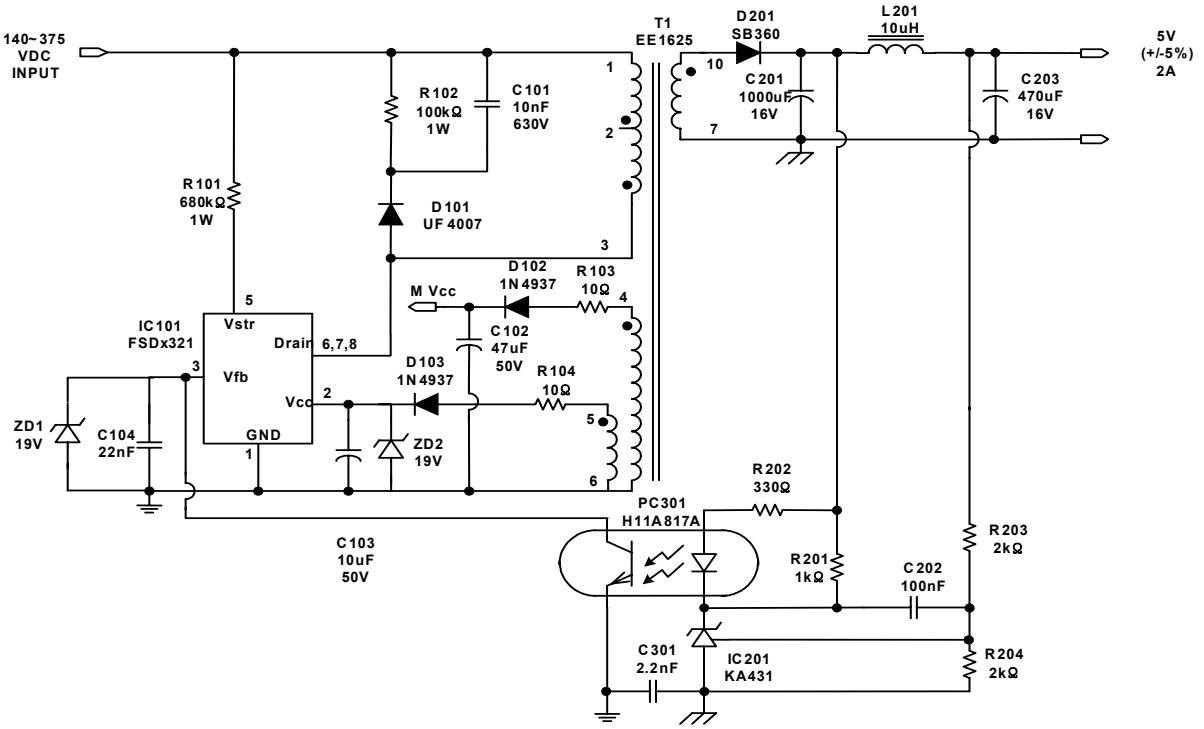

10W PC Auxiliary Power Circuit

10W PC Auxiliary Power, 150~375VDC Input Power supply:

It shows an auxiliary power for PC. Efficiency at 10W, 150/375VDC is ≥70%.

The PC application has the standard of standby power consumption, under 1W at the output load 0.5W and input voltage 230VAC. For this the FSDH321 also has the burst operating function like other green mode FPS' such as FSDM0265RN or FSDM0365RN and so on. This skill reduces the MOSFET switching numbers and power MOSFET switching loss. This design takes advantage of self protection without external components and high switching frequency, 100kHz. The frequency makes using a small size transformer core possible. The EE16 or EE1625 can be used for 10W application.

This is achieved by preventing the green FPS from switching when the input voltage goes below a level needed to maintain output regulation, and keeping it off until the input voltage goes above the under-voltage threshold, when the AC is turned on again. For example with the resistor, R101, 680kΩ, the threshold voltage is around 150VAC(210VDC) at the room temperature.

Surge voltages on the DRAIN pin due to the leakage inductance is clamped by R102 and C101, keeping the DRAIN voltage below 650 V under all conditions. The frequency modulation feature of FSDH321 allows the circuit shown to meet CISPR2AB with simple EMI filtering. The secondary is rectified and smoothed by D201. Similarly D102 and D103 are also rectifiers for main power control IC and FSDH321 respectively. The 5V output voltage require two capacitors in parallel to meet the ripple current requirement. Switching noise filtering is provided by L201. The output is regulated by the reference (TL431) voltage in secondary. It is sensed via R203 and R204. Resistor R201 provides bias for TL431 and R202 sets the overall DC gain. R202, C202 and R203 provide loop compensation.

2. Transformer Specification (10W Output Power)

1. Schematic Diagram

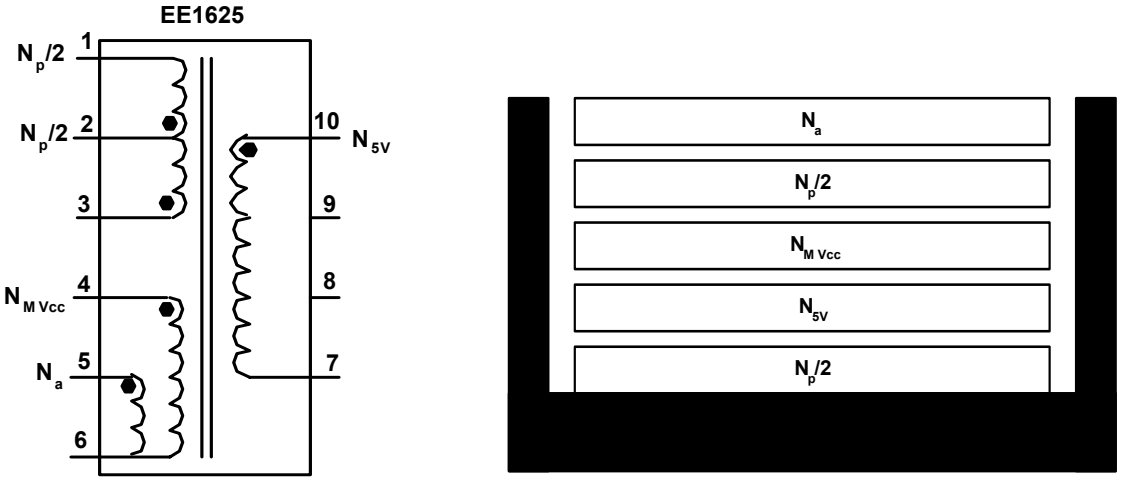

2. Winding Specification

	Pin (S → F)	Wire	Turns	Winding Method
Np/2	3 → 2	0.15φ × 1	80	Solenoid winding
Insulation : Polyester Tape t = 0.050mm, 3Layers				
N_{5V}	10 → 7	0.55φ × 1	12	Solenoid winding
Insulation : Polyester Tape t = 0.050mm, 3Layers				
N_{MVCC}	4 → 6	0.20φ × 1	40	Solenoid winding
Insulation : Polyester Tape t = 0.050mm, 3Layers				
Np/2	2 → 1	0.15φ × 1	80	Solenoid winding
Insulation : Polyester Tape t = 0.050mm, 3Layers				
Na	5 → 6	0.20φ × 1	34	Solenoid winding
Outer Insulation : Polyester Tape t = 0.050mm, 3Layers				

3. Electric Specification and Core and Bobbin

	Pin	Spec.	Remark
Inductance	1 – 3	1.8 mH	1kHz, 1V
Leakage	1 – 3	100uH	2nd side all short
Core	EE1625		
Bobbin	EE1625		

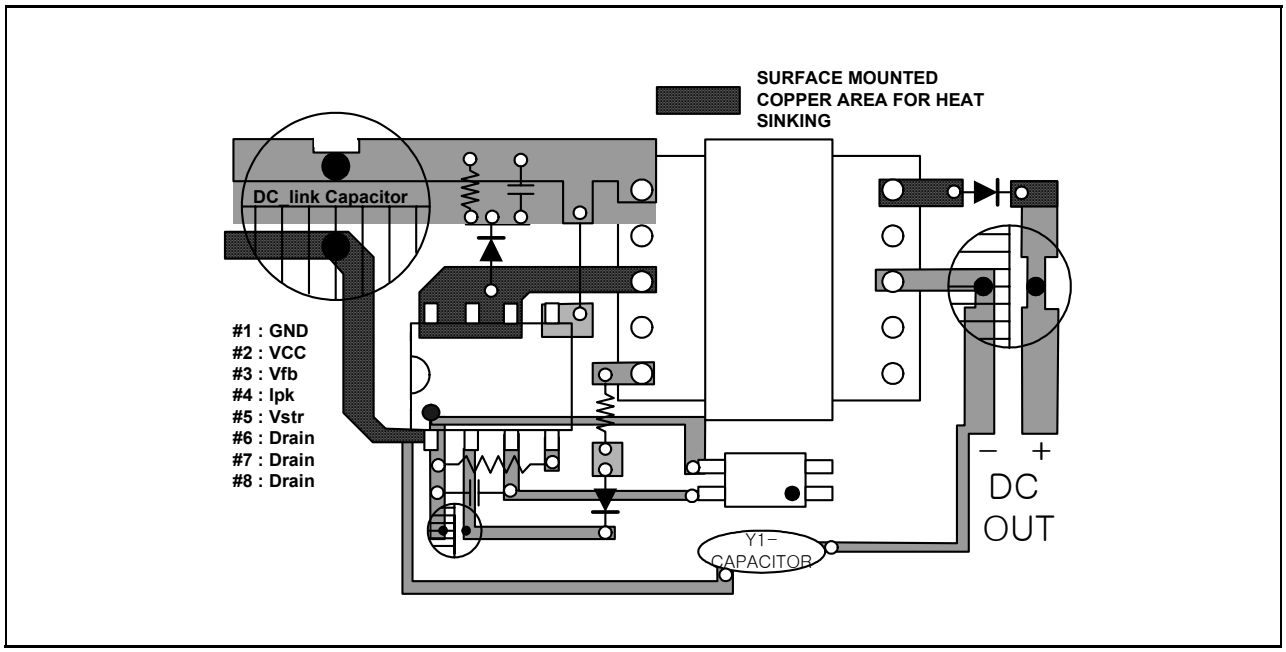

Figure 13. Layout Considerations for FSDx321 using 8DIP

Package Dimensions

8DIP

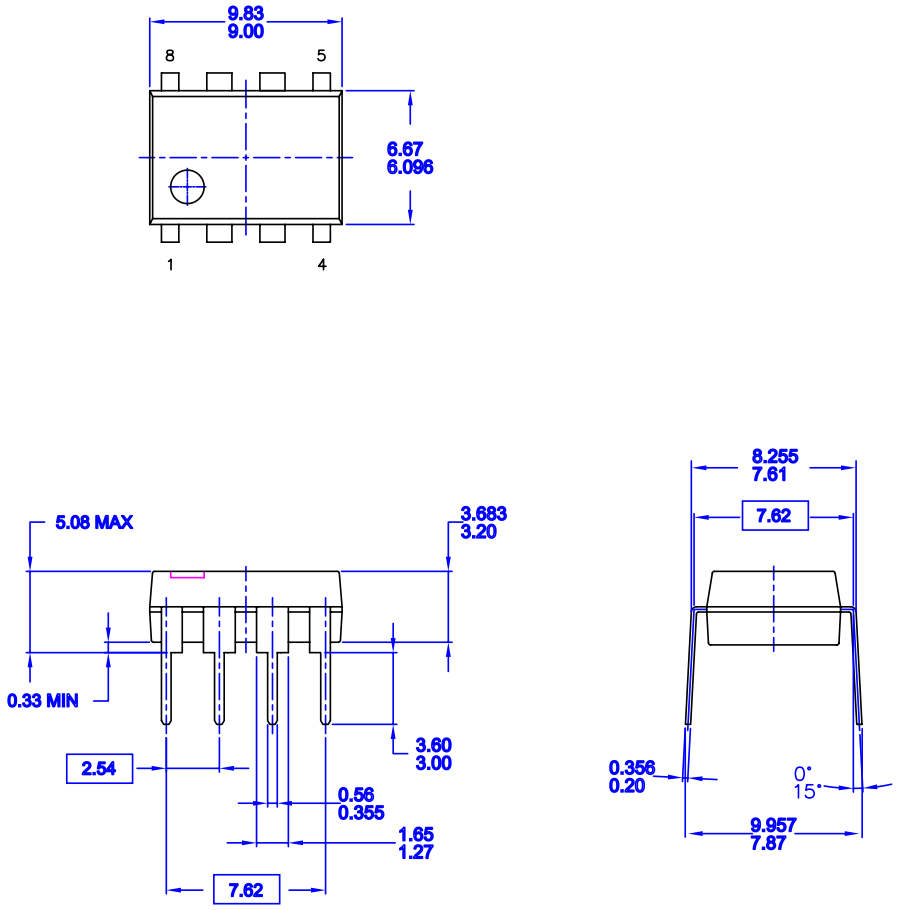

NOTES: UNLESS OTHERWISE SPECIFIED
A) THIS PACKAGE CONFORMS TO JEDEC MS-001 VARIATION BA
B) ALL DIMENSIONS ARE IN MILLIMETERS.
C) DIMENSIONS ARE EXCLUSIVE OF BURRS, MOLD FLASH, AND TIE BAR EXTRUSIONS.
D) DIMENSIONS AND TOLERANCES PER ASME Y14.5M-1994

MKT-N08FrevB

Package Dimensions (Continued)

8LSOP

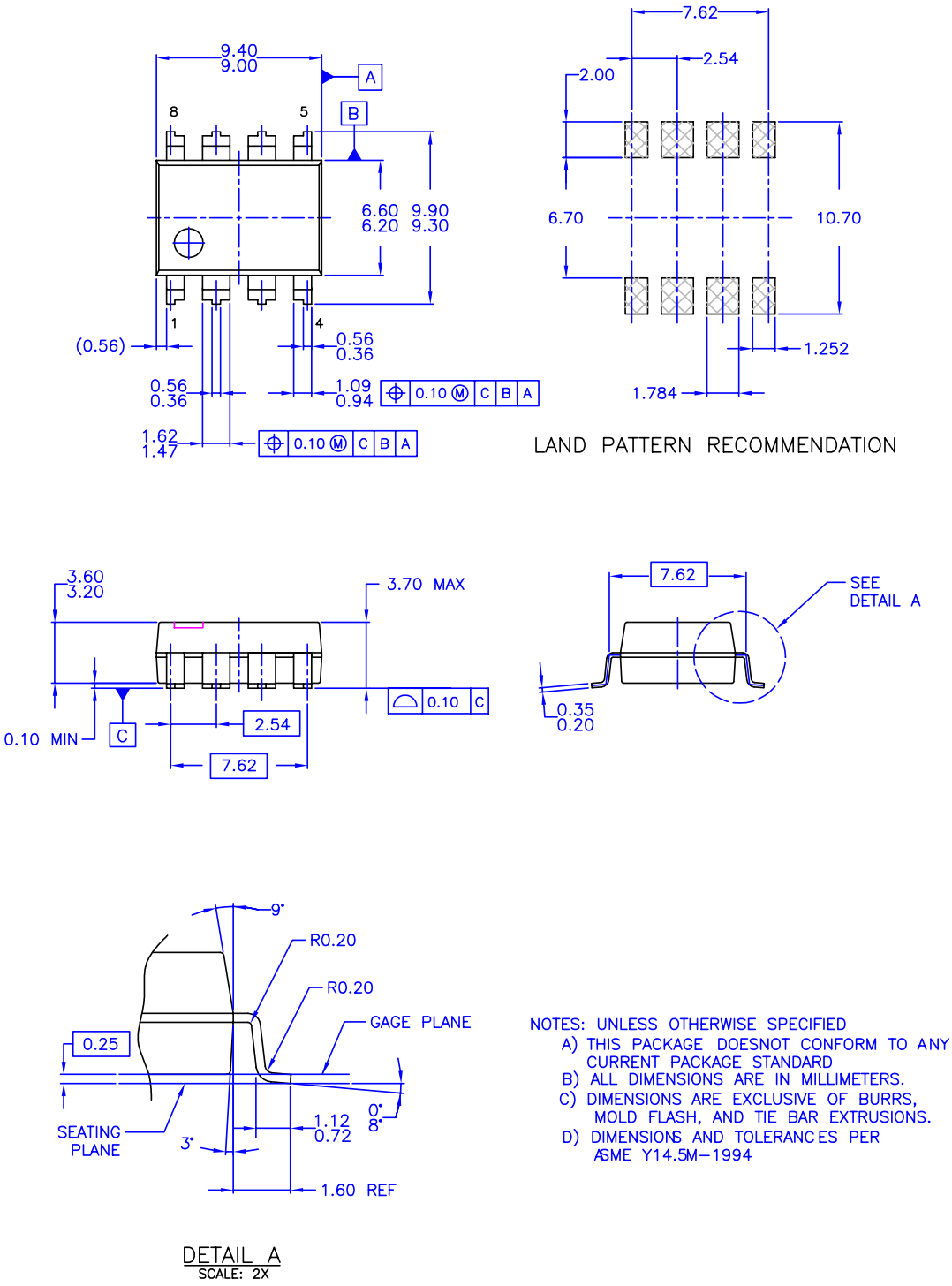

Ordering Information

Product Number	Package	Marking Code	BV_{DSS}	F_{OSC}	$R_{DS(on)}$
FSDH321	8DIP	DH321	650V	100KHz	14Ω
FSDL321	8DIP	DL321	650V	50KHz	14Ω
FSDH321L	8LSOP	DH321	650V	100KHz	14Ω
FSDL321L	8LSOP	DL321	650V	50KHz	14Ω

DISCLAIMER

FAIRCHILD SEMICONDUCTOR RESERVES THE RIGHT TO MAKE CHANGES WITHOUT FURTHER NOTICE TO ANY PRODUCTS HEREIN TO IMPROVE RELIABILITY, FUNCTION OR DESIGN. FAIRCHILD DOES NOT ASSUME ANY LIABILITY ARISING OUT OF THE APPLICATION OR USE OF ANY PRODUCT OR CIRCUIT DESCRIBED HEREIN; NEITHER DOES IT CONVEY ANY LICENSE UNDER ITS PATENT RIGHTS, NOR THE RIGHTS OF OTHERS.

LIFE SUPPORT POLICY

FAIRCHILD'S PRODUCTS ARE NOT AUTHORIZED FOR USE AS CRITICAL COMPONENTS IN LIFE SUPPORT DEVICES OR SYSTEMS WITHOUT THE EXPRESS WRITTEN APPROVAL OF THE PRESIDENT OF FAIRCHILD SEMICONDUCTOR CORPORATION. As used herein:

1. Life support devices or systems are devices or systems which, (a) are intended for surgical implant into the body, or (b) support or sustain life, and (c) whose failure to perform when properly used in accordance with instructions for use provided in the labeling, can be reasonably expected to result in a significant injury of the user.
2. A critical component in any component of a life support device or system whose failure to perform can be reasonably expected to cause the failure of the life support device or system, or to affect its safety or effectiveness.

4/26/05 0.0m 001
Stock#DSxxxxxxxx
© 2005 Fairchild Semiconductor Corporation

ENTEGRECİ

Bu belge www.entegreci.com üzerinden sunulmaktadır.

Elektronik komponent tedarikinde Entegreci

Entegreci, Eskişehir merkezli, Türkiye geneline satış yapan bir elektronik komponent mağazasıdır. Entegreler (IC), mikrodenetleyiciler, transistörler, diyotlar, pasif elemanlar, konnektörler, modüller ve geliştirme kartları tek adetten seri üretim adetlerine kadar satılır. Ürün sayfalarında güncel stok durumunu, fiyatı ve datasheet bağlantısını bulabilirsiniz.

Parça koduyla arama

Üretici parça numarasını yazın; stok ve fiyatı hemen görün.

www.entegreci.com

Ürün kategorileri

Entegreden kapasitöre tüm elektronik komponent kategorileri.

Kategorilere göz atın

Üreticiler

Aradığınız üreticinin ürünlerini tek sayfada inceleyin.

Üreticileri görün

Toplu alım ve teklif

Listede olmayan ya da yüksek adetli parçalar için teklif isteyin.

Teklif isteyin

www.entegreci.com | **destek@entegreci.com** | **0850 305 90 34**

Entegreci is an online electronic components store based in Türkiye. Search by manufacturer part number to see stock, prices and datasheets for integrated circuits, microcontrollers, transistors, passive components and connectors, or request a quote for parts that are not listed.

Bu sayfa Entegreci tarafından eklenmiştir. Belgenin önceki sayfaları asıl yayıncısına aittir ve içeriği değiştirilmemiştir; en güncel sürüm için belgenin yayıncısına başvurun.