TDA2050

32W Hi-Fi AUDIO POWER AMPLIFIER

- HIGH OUTPUT POWER (50W MUSIC POWER IEC 268.3 RULES)
- HIGH OPERATING SUPPLY VOLTAGE (50V)
- SINGLE OR SPLIT SUPPLY OPERATIONS
- VERY LOW DISTORTION
- SHORT CIRCUIT PROTECTION (OUT TO GND)
- THERMAL SHUTDOWN

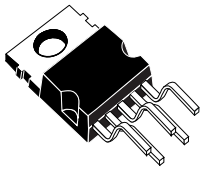

Pentawatt

ORDERING NUMBERS: TDA2050V
TDA2050H

DESCRIPTION

The TDA 2050 is a monolithic integrated circuit in Pentawatt package, intended for use as an audio class AB audio amplifier. Thanks to its high power capability the TDA2050 is able to provide up to 35W true rms power into 4 ohm load @ THD = 10%, V_S = ±18V, f = 1KHz and up to 32W into 8ohm load @ THD = 10%, V_S = ±22V, f = 1KHz.

Moreover, the TDA 2050 delivers typically 50W music power into 4 ohm load over 1 sec at V_S= 22.5V, f = 1KHz.

The high power and very low harmonic and cross-over distortion (THD = 0.05% typ, @ V_S = ±22V, P_O = 0.1 to 15W, R_L=8ohm, f = 100Hz to 15KHz) make the device most suitable for both HiFi and high class TV sets.

TEST AND APPLICATION CIRCUIT

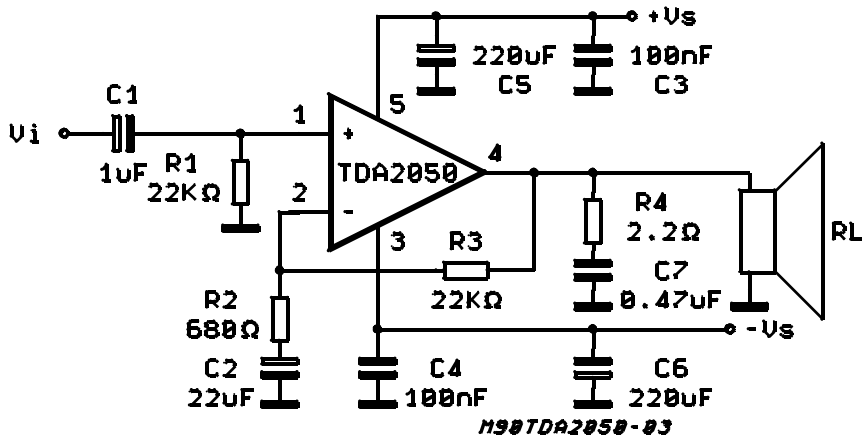

ABSOLUTE MAXIMUM RATINGS

Symbol	Parameter	Value	Unit
V_S	Supply Voltage	±25	V
V_i	Input Voltage	V_S	
V_i	Differential Input Voltage	±15	V
I_O	Output Peak Current (internally limited)	5	A
P_{tot}	Power Dissipation T_{CASE} = 75°C	25	W
T_{stg}, T_j	Storage and Junction Temperature	-40 to 150	°C

PIN CONNECTION (Top view)

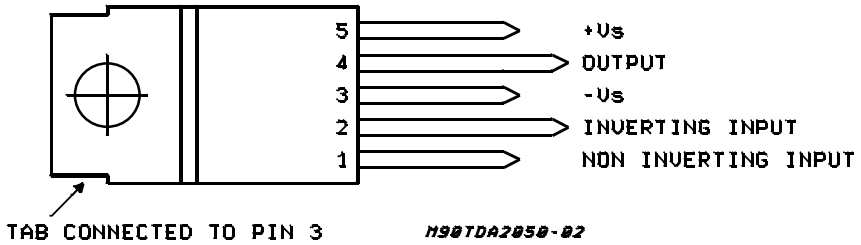

SCHEMATIC DIAGRAM

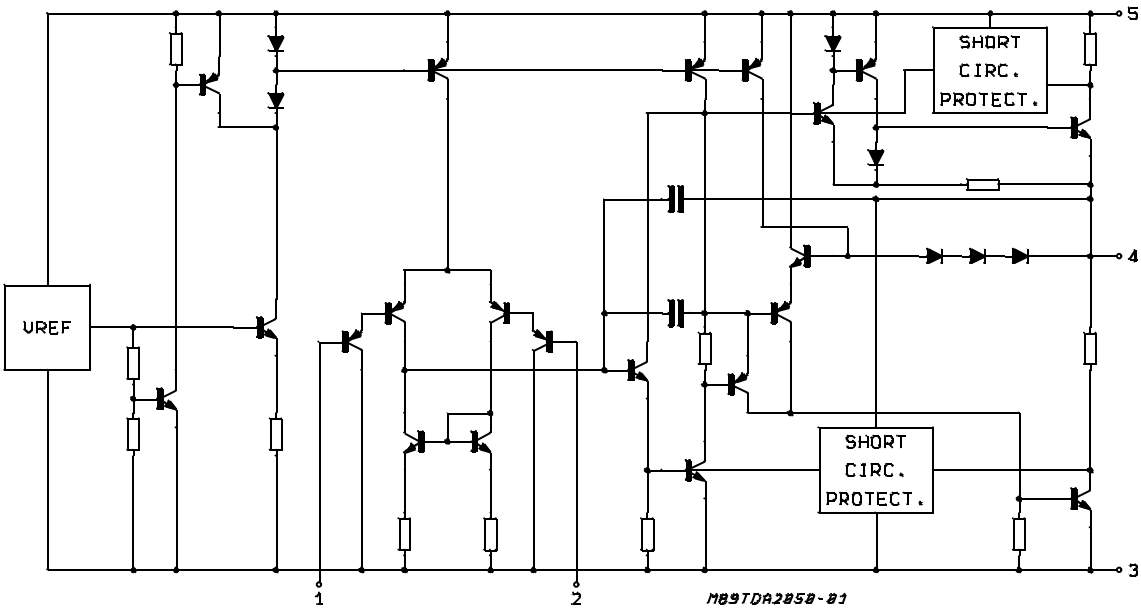

THERMAL DATA

Symbol	Description		Value	Unit
$R_{th\ j\text{-}case}$	Thermal Resistance junction-case	Max	3	°C/W

ELECTRICAL CHARACTERISTICS (Refer to the Test Circuit, V_S = ±18V, T_{amb} = 25°C, f = 1 kHz; unless otherwise specified)

Symbol	Parameter	Test Condition	Min.	Typ.	Max.	Unit
V_S	Supply Voltage Range		±4.5		±25	V
I_d	Quiescent Drain Current	V_S = ±4.5V V_S = ±25V		30 55	50 90	mA mA
I_b	Input Bias Current	V_S = ±22V		0.1	0.5	µA
V_{OS}	Input Offset Voltage	V_S = ±22V			±15	mV
I_{OS}	Input Offset Current	V_S = ±22V			±200	nA
P_O	RMS Output Power	d = 0.5% R_L = 4Ω R_L = 8Ω V_S = ±22V R_L = 8Ω	 24 22	 28 18 25		 W W W
		d = 10% R_L = 4Ω R_L = 8Ω V_S = ±22V R_L = 8Ω		 35 22 32		 W W W
	Music Power IEC268.3 RULES	d = 10%; T = 1s V_S = ±22.5V; R_L = 4Ω		 50		 W
d	Total Harmonic Distortion	R_L = 4Ω f = 1kHz, P_O = 0.1 to 24W f = 100Hz to 10kHz, P_O = 0.1 to 18W		 0.03	 0.5 0.5	 % %
		V_S = ±22V R_L = 8Ω f = 1kHz, P_O = 0.1 to 20W f = 100Hz to 10kHz, P_O = 0.1 to 15W		 0.02	 0.5	 % %
SR	Slew Rate		5	8		V/µs
G_V	Open Loop Voltage Gain			80		dB
G_V	Closed Loop Voltage Gain		30	30.5	31	dB
BW	Power Bandwidth (-3dB)	R_L = 4Ω V_i = 200mV	20 to 80,000			Hz
e_N	Total Input Noise	curve A B = 22Hz to 22kHz		4 5	 10	µV µV
R_i	Input Resistance (pin 1)		500			kΩ
SVR	Supply Voltage Rejection	R_s = 22kΩ; f = 100Hz; V_{ripple} = 0.5Vrms		 45		 dB
η	Efficiency	P_O = 28W; R_L = 4Ω		65		%
		P_O = 25W; R_L = 8Ω; V_S = ±22V		 67		 %
T_{sd-j}	Thermal Shut-down Junction Temperature			150		°C

Figure 1: Split Supply Typical Application Circuit

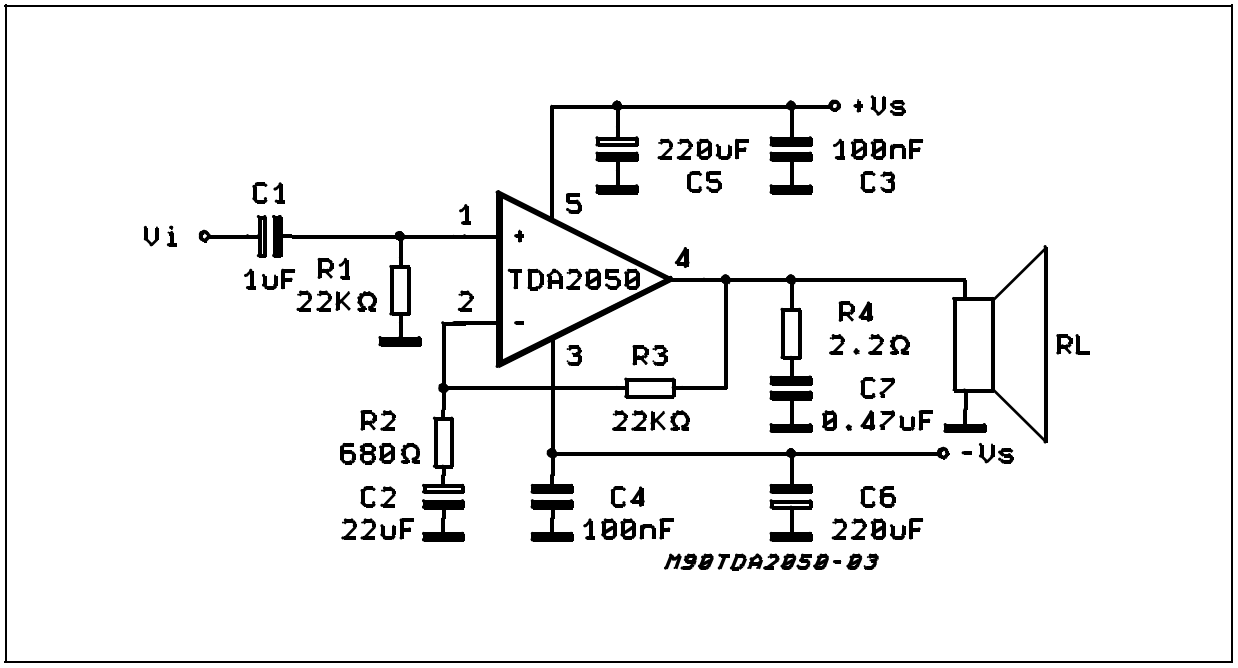

Figure 2: P.C. Board and Components Layout of the Circuit of Fig. 1 (1:1)

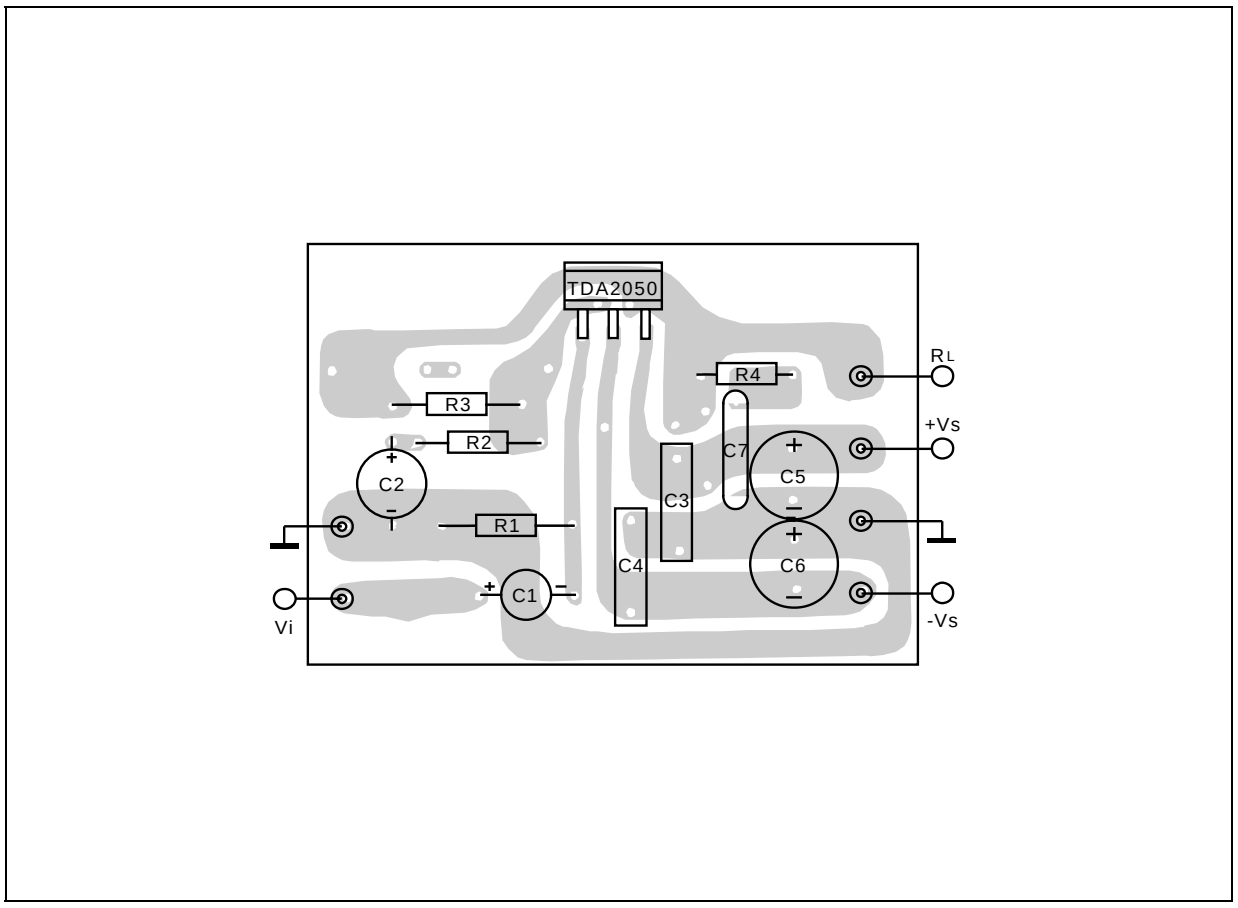

SPLIT SUPPLY APPLICATION SUGGESTIONS

The recommended values of the external components are those shown on the application circuit of fig. 2. Different values can be used. The following table can help the designer.

Component	Recommended Value	Purpose	Larger than Recommended Value	Smaller than Recommended Value
R1	22kΩ	Input Impedance	Increase of Input Impedance	Decrease of Input Impedance
R2	680Ω	Feedback Resistor	Decrease of Gain (*)	Increase of Gain
R3	22kΩ		Increase of Gain	Decrease of Gain (*)
R4	2.2Ω	Frequency Stability	Danger of Oscillations	
C1	1µF	Input Decoupling DC		Higher Low-frequency cut-off
C2	22µF	Inverting Input DC Decoupling	Increase of Switch ON/OFF Noise	Higher Low-frequency cut-off
C3 C4	100nF	Supply Voltage Bypass		Danger of Oscillations
C5 C6	220µF	Supply Voltage Bypass		Danger of Oscillations
C7	0.47µF	Frequency Stability		Danger of Oscillations

(*) The gain must be higher than 24dB

PRINTED CIRCUIT BOARD

The layout shown in fig. 2 should be adopted by the designers. If different layouts are used, the ground points of input 1 and input 2 must be well decoupled from the ground return of the output in which a high current flows.

Figure 3: Single Supply Typical Application Circuit

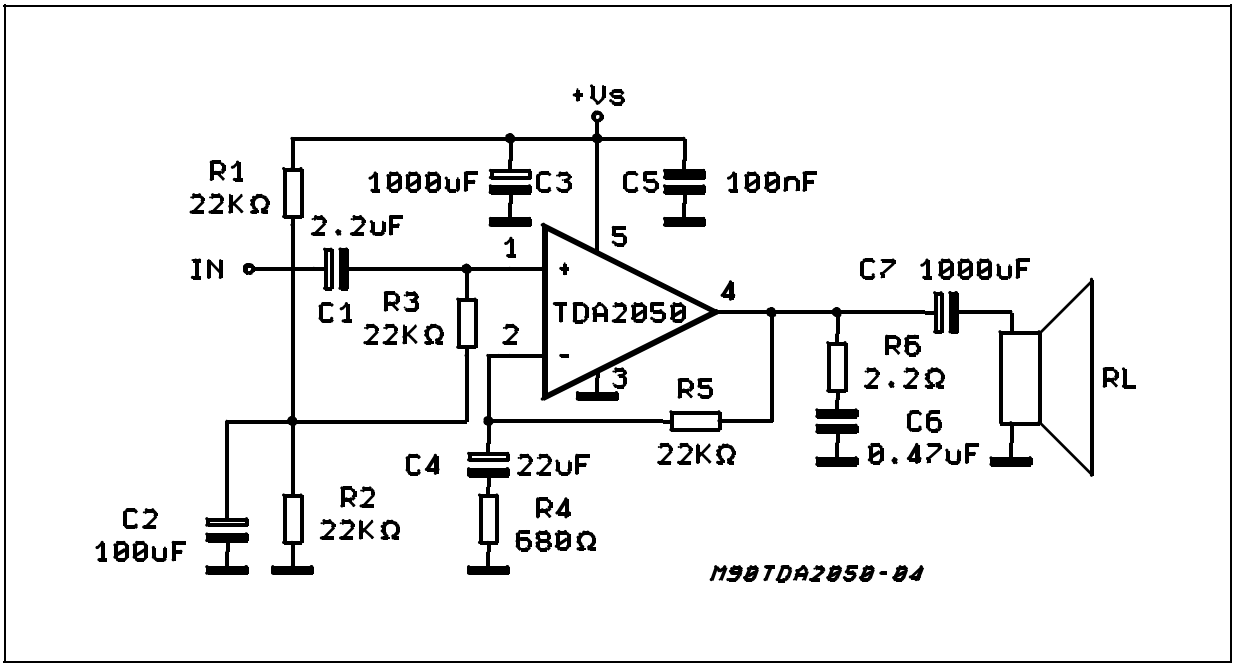

Figure 4: P.C. Board and Components Layout of the Circuit of Fig. 3 (1:1)

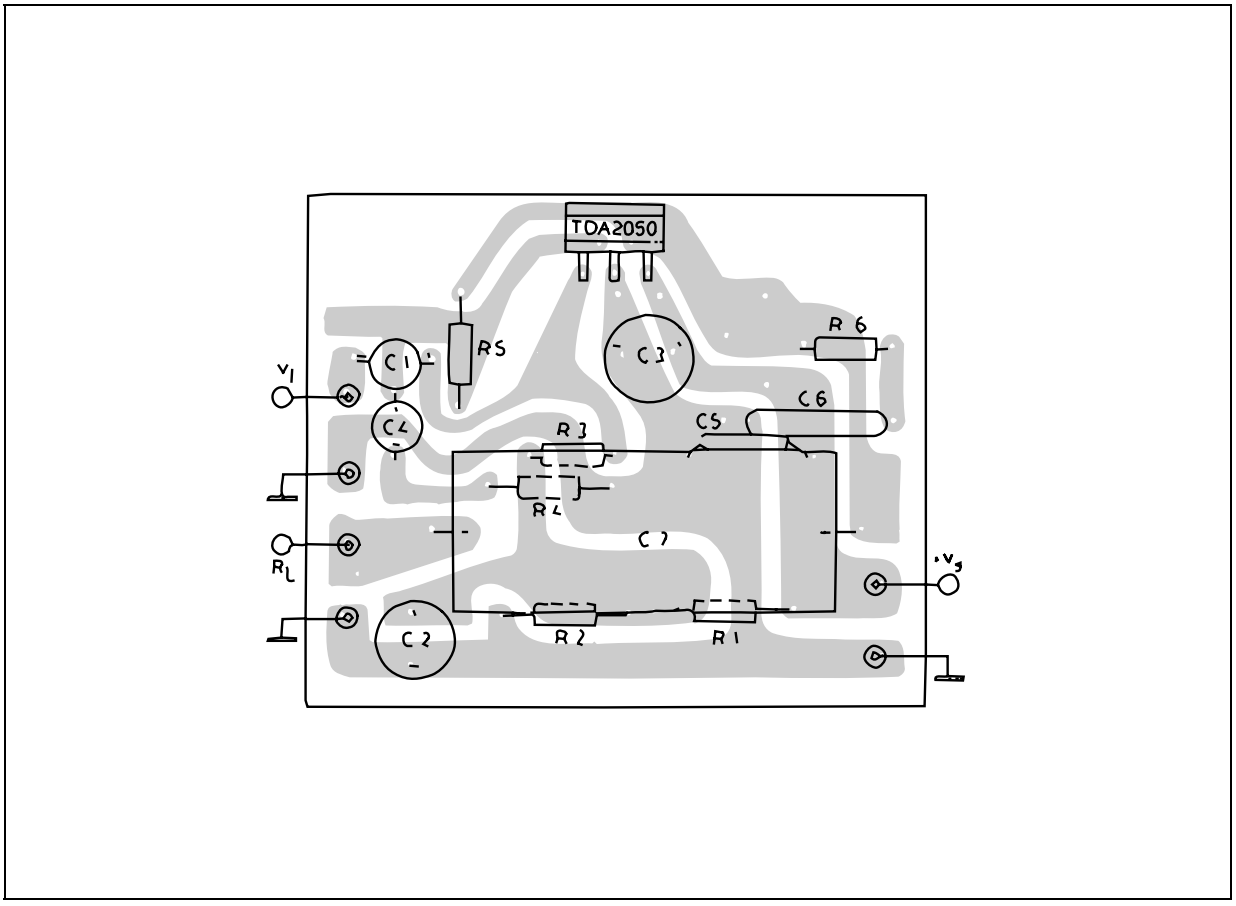

SINGLE SUPPLY APPLICATION SUGGESTIONS

The recommended values of the external components are those shown on the application circuit of fig. 3. Different values can be used. The following table can help the designer.

Component	Recommended Value	Purpose	Larger than Recommended Value	Smaller than Recommended Value
R1, R2, R3	22kΩ	Biasing Resistor		
R4	680Ω	Feedback Resistors	Increase of Gain	Decrease of Gain (*)
R5	22kΩ		Decrease of Gain (*)	Increase of Gain
R6	2.2Ω	Frequency Stability	Danger of Oscillations	
C1	2.2µF	Input Decoupling DC		Higher Low-frequency cut-off
C2	100µF	Supply Voltage Rejection	Worse Turn-off Transient Worse Turn-on Delay	
C3	1000µF	Supply Voltage Bypass		Danger of Oscillations Worse of Turn-off Transient
C4	22µF	Inverting Input DC Decoupling	Increase of Switching ON/OFF	Higher Low-frequency cut-off
C5	100nF	Supply Voltage Bypass		Danger of Oscillations
C6	0.47µF	Frequency Stability		Danger of Oscillations
C7	1000µF	Output DC Decoupling		Higher Low-frequency cut-off

(*) The gain must be higher than 24dB

NOTE

If the supply voltage is lower than 40V and the load is 8ohm (or more) a lower value of C2 can be used (i.e. 22µF).

C7 can be larger than 1000uF only if the supply voltage does not exceed 40V.

TYPICAL CHARACTERISTICS (Split Supply Test Circuit unless otherwise specified)

Figure 5: Output Power vs. Supply Voltage

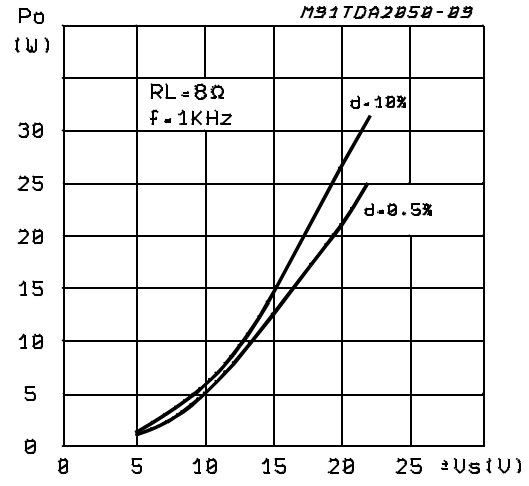

Figure 6: Distortion vs. Output Power

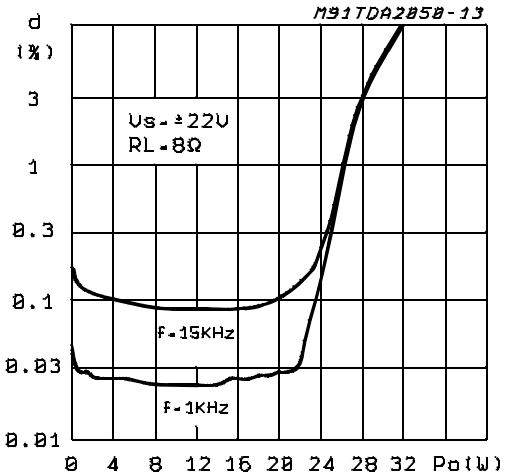

Figure 7: Output Power vs. Supply Voltage

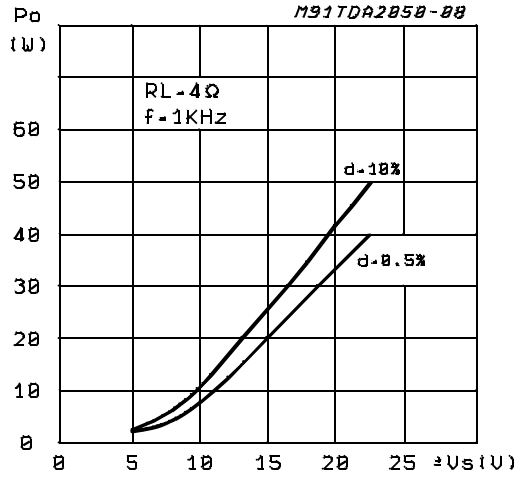

Figure. 9: Distortion vs. Frequency

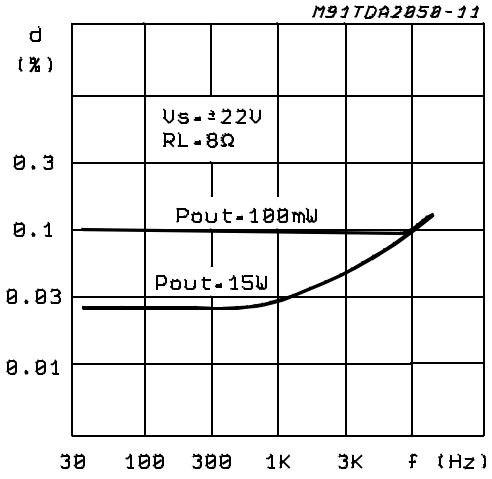

Figure 11: Quiescent Current vs. Supply Voltage

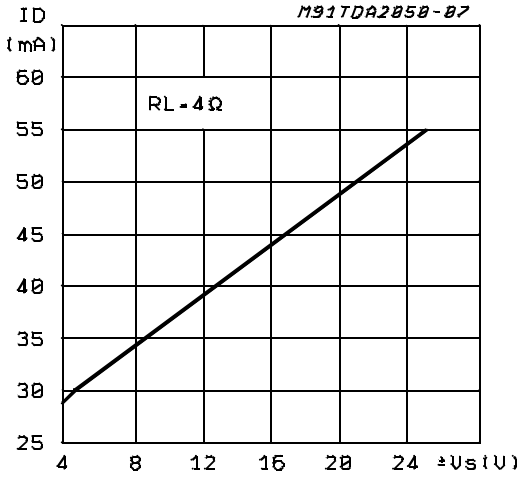

Figure 8: Distortion vs. Output Power

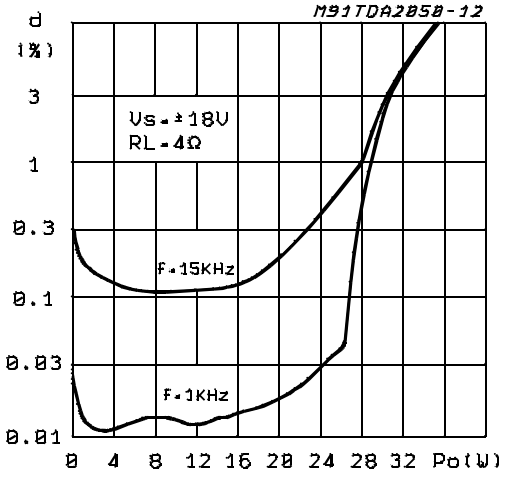

Figure 10: Distortion vs. Frequency

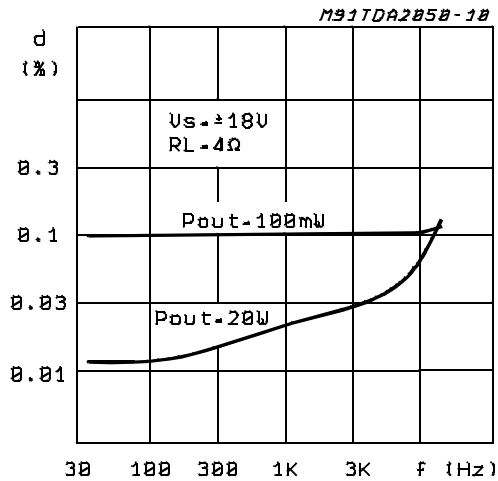

Figure 12: Supply Voltage Rejection vs. Frequency

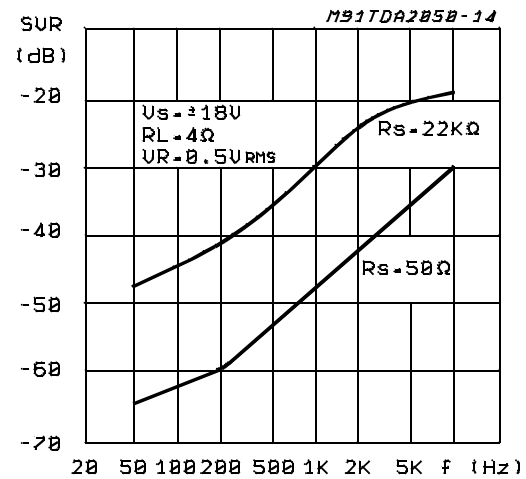

Figure 13: Supply Voltage Rejection vs. Frequency (Single supply) for Different values of C2 (circuit of fig. 3)

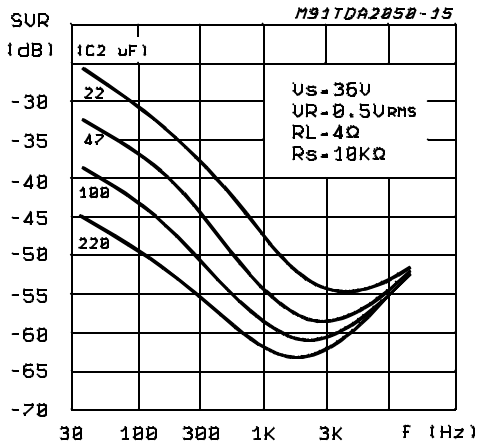

Figure 14: Supply Voltage Rejection vs. Frequency (Single supply) for Different values of C2 (circuit of fig. 3)

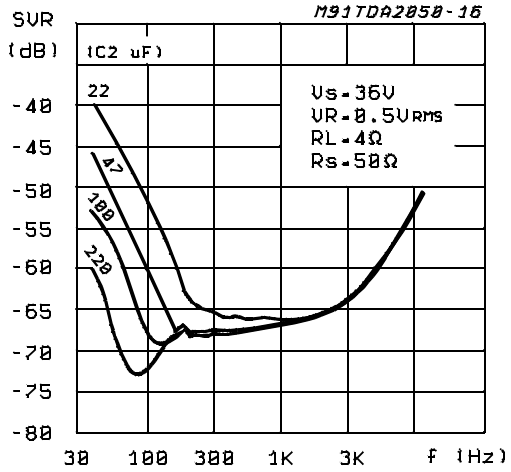

Figure 15: Total Power Dissipation and Efficiency vs. Output Power

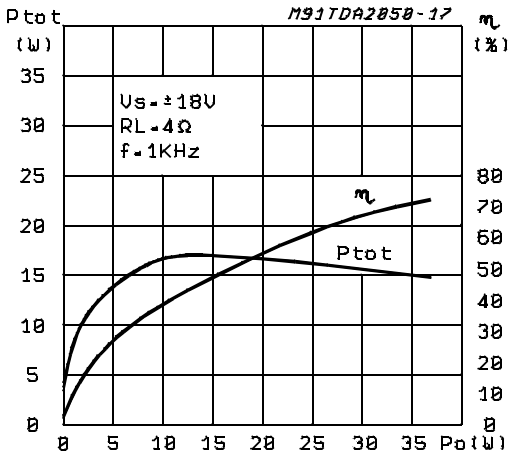

Figure 16: Total Power Dissipation and Efficiency vs. Output Power

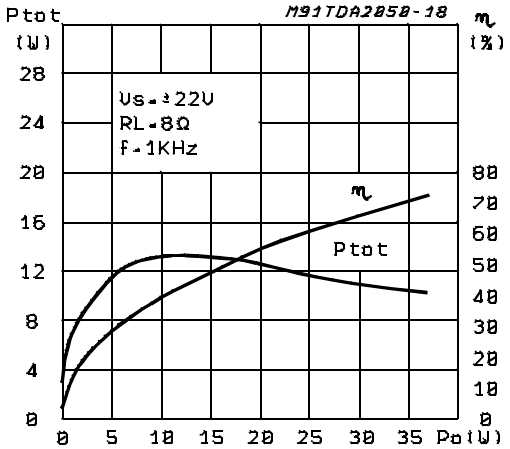

SHORT CIRCUIT PROTECTION

The TDA 2050 has an original circuit which limits the current of the output transistors. The maximum output current is a function of the collector emitter voltage; hence the output transistors work within their safe operating area. This function can therefore be considered as being peak power limiting rather than simple current limiting.

It reduces the possibility that the device gets damaged during an accidental short circuit from AC output to ground.

THERMAL SHUTDOWN

The presence of a thermal limiting circuit offers the following advantages:

1)An overload on the output (even if it is permanent), or an above limit ambient temperature can be easily tolerated since the Tj cannot be higher than 150°C.

2)The heatsink can have a smaller factor of safety compared with that of a conventional circuit. There is no possibility of device damage due to high junction temperature. If for any reason, the junction temperature increases up to 150°C, the thermal shutdown simply reduces the power dissipation and the current consumption.

The maximum allowable power dissipation depends upon the thermal resistance junction-ambi-

ent. Fig. 17 shows this dissipable power as a function of ambient temperature for different thermal resistance.

Figure 17: Maximum Allowable Power Dissipation vs. Ambient Temperature

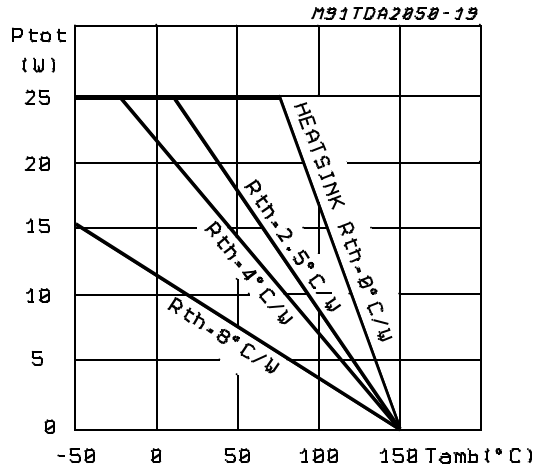

MOUNTING INSTRUCTIONS

The power dissipated in the circuit must be removed by adding an external heatsink.

Thanks to the PENTAWATT package, the heatsink mounting operation is very simple, a screw or a compression spring (clip) being sufficient. Between the heatsink and the package is better to insert a layer of silicon grease, to optimize the thermal contact; no electrical isolation is needed between the two surfaces. Fig. 18 shows an example of heatsink.

Dimension suggestion

The following table shows the length that the heatsink in fig. 18 must have for several values of Ptot and Rth.

P_{tot} (W)	12	8	6
Lenght of heatsink (mm)	60	40	30
R_{th} of heatsink (°C/W)	4.2	6.2	8.3

Figure 18: Example of heat-sink

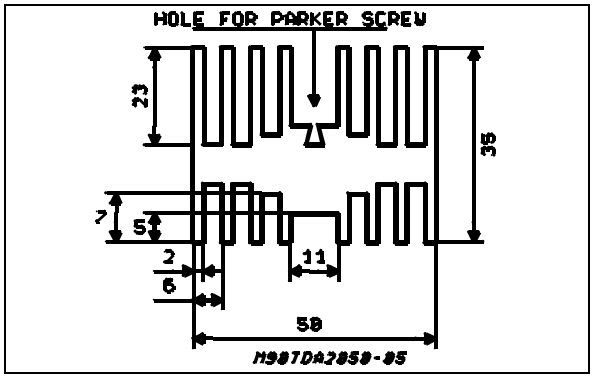

APPENDIX A

A.1 - MUSIC POWER CONCEPT

MUSIC POWER is (according to the IEC clauses n.268-3 of Jan 83) the maximum power which the amplifier is capable of producing across the rated load resistance (regardless of non linearity) 1 sec after the application of a sinusoidal input signal of frequency 1 KHz.

According to this definition our method of measurement comprises the following steps:

- Set the voltage supply at the maximum operating value;
- Apply a input signal in the form of a 1KHz tone burst of 1 sec duration: the repetition period of the signal pulses is 60 sec;
- The output voltage is measured 1 sec from the start of the pulse;
- Increase the input voltage until the output signal shows a THD=10%;
- The music power is then V^2_{out} /RL, where Vout is the output voltage measured in the condition of point 4 and RL is the rated load impedance;

The target of this method is to avoid excessive dissipation in the amplifier.

A.2 - INSTANTANEOUS POWER

Another power measurement (MAXIMUM INSTANTANEOUS OUTPUT POWER) was proposed by IEC in 1988 (IEC publication 268-3 subclause 19.A).

We give here only a brief extract of the concept, and a circuit useful for the measurement.

The supply voltage is set at the maximum operating value.

The test signal consists of a sinusoidal signal whose frequency is 20 Hz, to which are added alternate positive and negative pulses of 50 µs duration and 500 Hz repetition rate. The amplitude of the 20 Hz signal is chosen to drive the amplifier to its voltage clipping limits, while the amplitude of the pulses takes the amplifier alternately into its current-overload limits.

A circuit for generating the test signal is given in fig. 19.

The load network consists of a 40 µF capacitor, in series with a 1 ohm resistor. The capacitor limits the current due to the 20 Hz signal to a low value, whereas for he short pulses the effective load impedance is of the order of 1 ohm, and a high output current is produced.

Using this signal and load network the measurement may be made without causing excessive dissipation in the amplifier. The dissipation in the 1 ohm resistor is much lower than a rated output power of the amplifier, because the duty-cycle of the high output current is low.

By feeding the amplifier output voltage to the X-plates of an oscilloscope, and the voltage across the 1 ohm resistor (representing the output current) to the Y=plates, it is possible to read on the display the value of the maximum instantaneous output power.

The result of this test applied at the TDA 2050 is:

PEAK POWER = 100W typ

Figure 19: Test circuit for peak power measurement

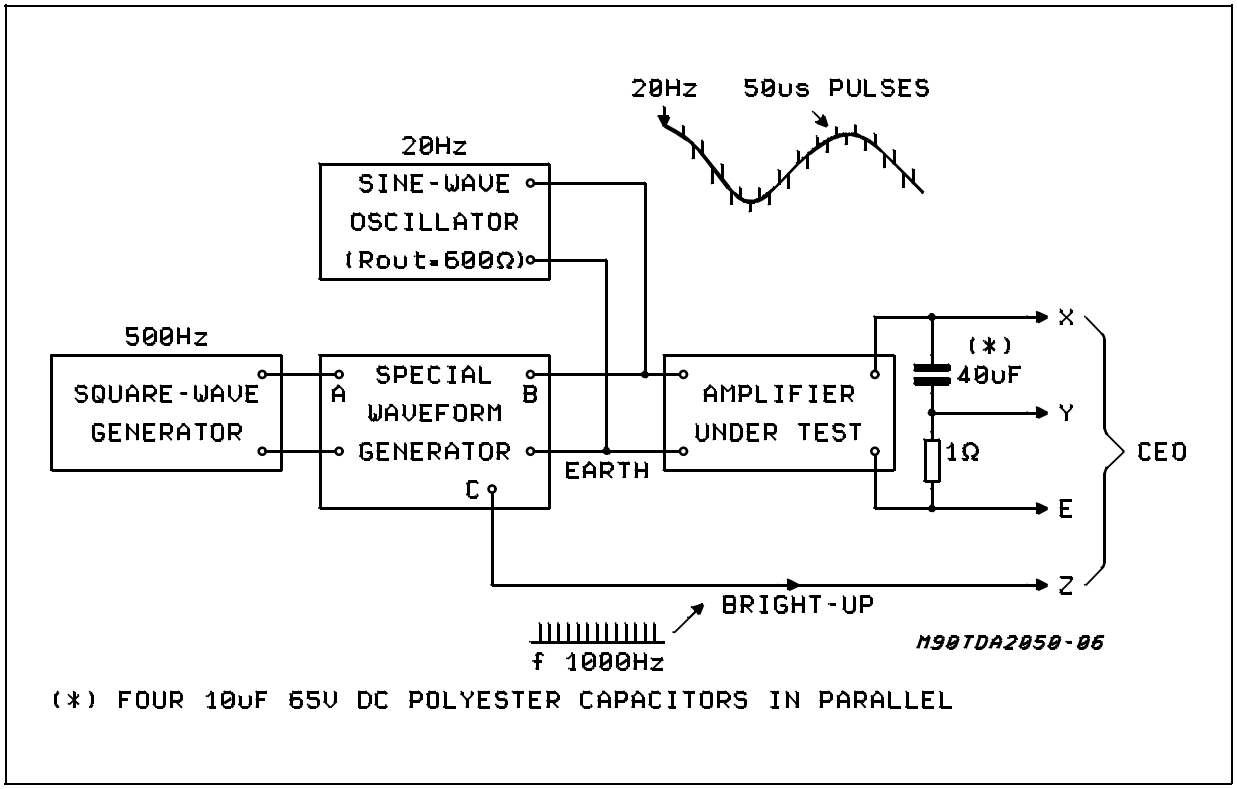

DIM.	mm			inch		
	MIN.	TYP.	MAX.	MIN.	TYP.	MAX.
A			4.8			0.189
C			1.37			0.054
D	2.4		2.8	0.094		0.110
D1	1.2		1.35	0.047		0.053
E	0.35		0.55	0.014		0.022
E1	0.76		1.19	0.030		0.047
F	0.8		1.05	0.031		0.041
F1	1.0		1.4	0.039		0.055
G	3.2	3.4	3.6	0.126	0.134	0.142
G1	6.6	6.8	7.0	0.260	0.268	0.276
H2			10.4			0.409
H3	10.05		10.4	0.396		0.409
L	17.55	17.85	18.15	0.691	0.703	0.715
L1	15.55	15.75	15.95	0.612	0.620	0.628
L2	21.2	21.4	21.6	0.831	0.843	0.850
L3	22.3	22.5	22.7	0.878	0.886	0.894
L4			1.29			0.051
L5	2.6		3.0	0.102		0.118
L6	15.1		15.8	0.594		0.622
L7	6.0		6.6	0.236		0.260
L9	2.1		2.7	0.008		0.106
L10	4.3		4.8	0.17		0.189
M	4.23	4.5	4.75	0.167	0.178	0.187
M1	3.75	4.0	4.25	0.148	0.157	0.167
V4	40° (typ.)					
V5	90° (typ.)					
Dia	3.65		3.85	0.144		0.152

OUTLINE AND MECHANICAL DATA

Weight: 2.00gr

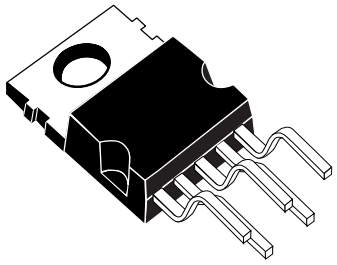

Pentawatt V

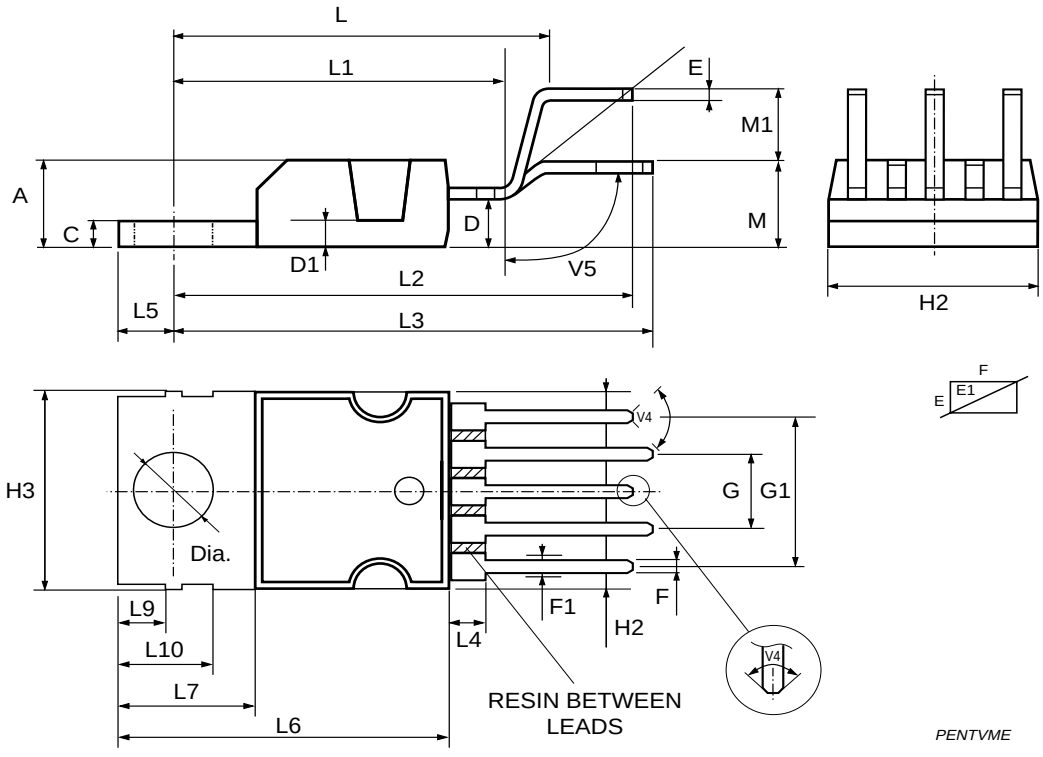

0015981

Information furnished is believed to be accurate and reliable. However, STMicroelectronics assumes no responsibility for the consequences of use of such information nor for any infringement of patents or other rights of third parties which may result from its use. No license is granted by implication or otherwise under any patent or patent rights of STMicroelectronics. Specification mentioned in this publication are subject to change without notice. This publication supersedes and replaces all information previously supplied. STMicroelectronics products are not authorized for use as critical components in life support devices or systems without express written approval of STMicroelectronics.

The ST logo is a registered trademark of STMicroelectronics

© 2002 STMicroelectronics – Printed in Italy – All Rights Reserved

PENTAWATT® is a Registered Trademark of SGS-THOMSON Microelectronics

STMicroelectronics GROUP OF COMPANIES

Australia - Brazil - Canada - China - Finland - France - Germany - Hong Kong - India - Israel - Italy - Japan - Malaysia - Malta - Morocco - Singapore - Spain - Sweden - Switzerland - United Kingdom - United States.

http://www.st.com

ENTEGRECİ

Bu belge www.entegreci.com üzerinden sunulmaktadır.

Elektronik komponent tedarikinde Entegreci

Entegreci, Eskişehir merkezli, Türkiye geneline satış yapan bir elektronik komponent mağazasıdır. Entegreler (IC), mikrodenetleyiciler, transistörler, diyotlar, pasif elemanlar, konnektörler, modüller ve geliştirme kartları tek adetten seri üretim adetlerine kadar satılır. Ürün sayfalarında güncel stok durumunu, fiyatı ve datasheet bağlantısını bulabilirsiniz.

Parça koduyla arama

Üretici parça numarasını yazın; stok ve fiyatı hemen görün.

www.entegreci.com

Ürün kategorileri

Entegreden kapasitöre tüm elektronik komponent kategorileri.

Kategorilere göz atın

Üreticiler

Aradığınız üreticinin ürünlerini tek sayfada inceleyin.

Üreticileri görün

Toplu alım ve teklif

Listede olmayan ya da yüksek adetli parçalar için teklif isteyin.

Teklif isteyin

www.entegreci.com | **destek@entegreci.com** | **0850 305 90 34**

Entegreci is an online electronic components store based in Türkiye. Search by manufacturer part number to see stock, prices and datasheets for integrated circuits, microcontrollers, transistors, passive components and connectors, or request a quote for parts that are not listed.

Bu sayfa Entegreci tarafından eklenmiştir. Belgenin önceki sayfaları asıl yayıncısına aittir ve içeriği değiştirilmemiştir; en güncel sürüm için belgenin yayıncısına başvurun.