FAIRCHILD SEMICONDUCTOR®

January 2008

74AC74, 74ACT74
Dual D-Type Positive Edge-Triggered Flip-Flop

Features

- I_{CC} reduced by 50%
- Output source/sink 24mA
- ACT74 has TTL-compatible inputs

General Description

The AC/ACT74 is a dual D-type flip-flop with Asynchronous Clear and Set inputs and complementary (Q, $\overline{Q}$) outputs. Information at the input is transferred to the outputs on the positive edge of the clock pulse. Clock triggering occurs at a voltage level of the clock pulse and is not directly related to the transition time of the positive-going pulse. After the Clock Pulse input threshold voltage has been passed, the Data input is locked out and information present will not be transferred to the outputs until the next rising edge of the Clock Pulse input.

Asynchronous Inputs:

- LOW input to $\overline{S}_D$ (Set) sets Q to HIGH level
- LOW input to $\overline{C}_D$ (Clear) sets Q to LOW level
- Clear and Set are independent of clock
- Simultaneous LOW on $\overline{C}_D$ and $\overline{S}_D$ makes both Q and $\overline{Q}$ HIGH

Ordering Information

Order Number	Package Number	Package Description
74AC74SC	M14A	14-Lead Small Outline Integrated Circuit (SOIC), JEDEC MS-012, 0.150" Narrow
74AC74SJ	M14D	14-Lead Small Outline Package (SOP), EIAJ TYPE II, 5.3mm Wide
74AC74MTC	MTC14	14-Lead Thin Shrink Small Outline Package (TSSOP), JEDEC MO-153, 4.4mm Wide
74AC74PC	N14A	14-Lead Plastic Dual-In-Line Package (PDIP), JEDEC MS-001, 0.300” Wide
74ACT74SC	M14A	14-Lead Small Outline Integrated Circuit (SOIC), JEDEC MS-012, 0.150" Narrow
74ACT74SJ	M14D	14-Lead Small Outline Package (SOP), EIAJ TYPE II, 5.3mm Wide
74ACT74MTC	MTC14	14-Lead Thin Shrink Small Outline Package (TSSOP), JEDEC MO-153, 4.4mm Wide
74ACT74PC	N14A	14-Lead Plastic Dual-In-Line Package (PDIP), JEDEC MS-001, 0.300” Wide

Device also available in Tape and Reel. Specify by appending suffix letter “X” to the ordering number.

All packages are lead free per JEDEC: J-STD-020B standard.

©1988 Fairchild Semiconductor Corporation

Connection Diagram

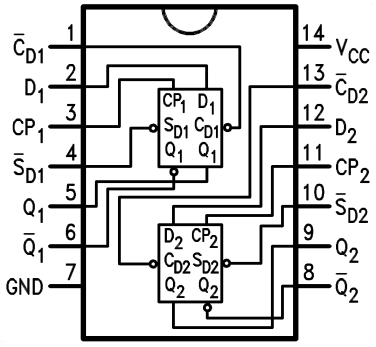

Logic Symbols

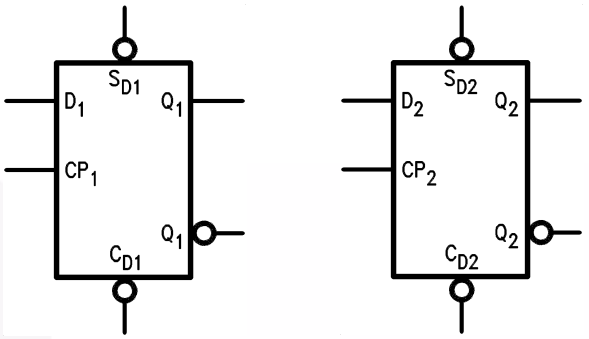

IEEE/IEC

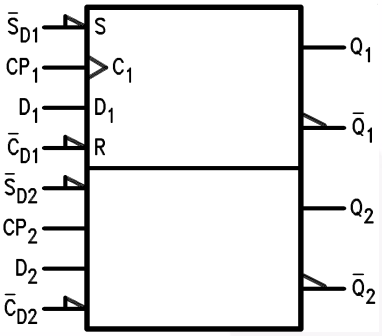

Pin Descriptions

Pin Names	Description
D_1, D_2	Data Inputs
CP_1, CP_2	Clock Pulse Inputs
$\overline{C}_{D1}$, $\overline{C}_{D2}$	Direct Clear Inputs
$\overline{S}_{D1}$, $\overline{S}_{D2}$	Direct Set Inputs
Q_1, $\overline{Q}_1$, Q_2, $\overline{Q}_2$	Outputs

Truth Table

(Each Half)

Inputs				Outputs	
$\overline{S}_D$	$\overline{C}_D$	CP	D	Q	Q
L	H	X	X	H	L
H	L	X	X	L	H
L	L	X	X	H	H
H	H	↗	H	H	L
H	H	↗	L	L	H
H	H	L	X	Q_0	$\overline{Q}_0$

H = HIGH Voltage Level

L = LOW Voltage Level

X = Immaterial

↗ = LOW-to-HIGH Clock Transition

Q_0 ($\overline{Q}_0$) = Previous Q ($\overline{Q}$) before LOW-to-HIGH Transition of Clock

©1988 Fairchild Semiconductor Corporation

Logic Diagram

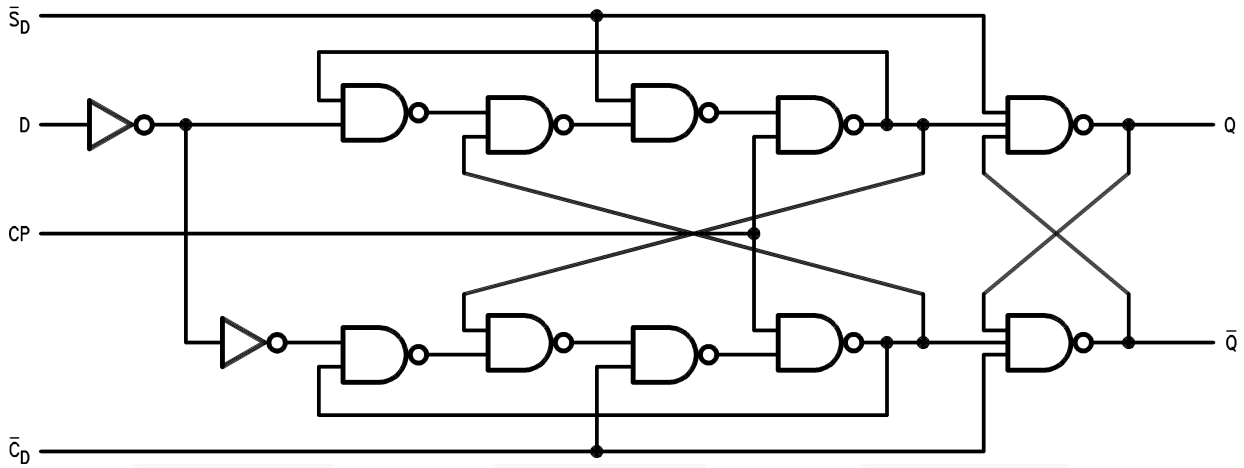

Please note that this diagram is provided only for the understanding of logic operations and should not be used to estimate propagation delays.

Absolute Maximum Ratings

Stresses exceeding the absolute maximum ratings may damage the device. The device may not function or be operable above the recommended operating conditions and stressing the parts to these levels is not recommended. In addition, extended exposure to stresses above the recommended operating conditions may affect device reliability. The absolute maximum ratings are stress ratings only.

Symbol	Parameter	Rating
V_{CC}	Supply Voltage	–0.5V to +7.0V
I_{IK}	DC Input Diode Current	
	$V_I = –0.5V$	–20mA
	$V_I = V_{CC} + 0.5$	+20mA
V_I	DC Input Voltage	–0.5V to V_{CC} + 0.5V
I_{OK}	DC Output Diode Current	
	$V_O = –0.5V$	–20mA
	$V_O = V_{CC} + 0.5V$	+20mA
V_O	DC Output Voltage	–0.5V to V_{CC} + 0.5V
I_O	DC Output Source or Sink Current	±50mA
I_{CC} or I_{GND}	DC V_{CC} or Ground Current per Output Pin	±50mA
T_{STG}	Storage Temperature	–65°C to +150°C
T_J	Junction Temperature	140°C

Recommended Operating Conditions

The Recommended Operating Conditions table defines the conditions for actual device operation. Recommended operating conditions are specified to ensure optimal performance to the datasheet specifications. Fairchild does not recommend exceeding them or designing to absolute maximum ratings.

Symbol	Parameter	Rating
V_{CC}	Supply Voltage	
	AC	2.0V to 6.0V
	ACT	4.5V to 5.5V
V_I	Input Voltage	0V to V_{CC}
V_O	Output Voltage	0V to V_{CC}
T_A	Operating Temperature	–40°C to +85°C
$\Delta V / \Delta t$	Minimum Input Edge Rate, AC Devices:	125mV/ns
	V_{IN} from 30% to 70% of V_{CC}, V_{CC} @ 3.3V, 4.5V, 5.5V	
$\Delta V / \Delta t$	Minimum Input Edge Rate, ACT Devices:	125mV/ns
	V_{IN} from 0.8V to 2.0V, V_{CC} @ 4.5V, 5.5V	

©1988 Fairchild Semiconductor Corporation

DC Electrical Characteristics for AC

Symbol	Parameter	V_{CC} (V)	Conditions	T_A = +25°C	T_A = –40°C to +85°C		Units
				Typ.	Guaranteed Limits		
V_{IH}	Minimum HIGH Level Input Voltage	3.0	V_{OUT} = 0.1V or V_{CC} – 0.1V	1.5	2.1	2.1	V
		4.5		2.25	3.15	3.15	
		5.5		2.75	3.85	3.85	
V_{IL}	Maximum LOW Level Input Voltage	3.0	V_{OUT} = 0.1V or V_{CC} – 0.1V	1.5	0.9	0.9	V
		4.5		2.25	1.35	1.35	
		5.5		2.75	1.65	1.65	
V_{OH}	Minimum HIGH Level Output Voltage	3.0	I_{OUT} = –50µA	2.99	2.9	2.9	V
		4.5		4.49	4.4	4.4	
		5.5		5.49	5.4	5.4	
		3.0	$V_{IN} = V_{IL}$ or V_{IH}, I_{OH} = –12mA		2.56	2.46	
		4.5	$V_{IN} = V_{IL}$ or V_{IH}, I_{OH} = –24mA		3.86	3.76	
		5.5	$V_{IN} = V_{IL}$ or V_{IH}, I_{OH} = –24mA(1)		4.86	4.76	
V_{OL}	Maximum LOW Level Output Voltage	3.0	I_{OUT} = 50µA	0.002	0.1	0.1	V
		4.5		0.001	0.1	0.1	
		5.5		0.001	0.1	0.1	
		3.0	$V_{IN} = V_{IL}$ or V_{IH}, I_{OL} = 12mA		0.36	0.44	
		4.5	$V_{IN} = V_{IL}$ or V_{IH}, I_{OL} = 24mA		0.36	0.44	
		5.5	$V_{IN} = V_{IL}$ or V_{IH}, I_{OL} = 24mA(1)		0.36	0.44	
I_{IN}(3)	Maximum Input Leakage Current	5.5	$V_I = V_{CC}$, GND		±0.1	±1.0	µA
I_{OLD}	Minimum Dynamic Output Current(2)	5.5	V_{OLD} = 1.65V Max.			75	mA
I_{OHD}		5.5	V_{OHD} = 3.85V Min.			–75	mA
I_{CC}(3)	Maximum Quiescent Supply Current	5.5	$V_{IN} = V_{CC}$ or GND		2.0	20.0	µA

Notes:

1. All outputs loaded; thresholds on input associated with output under test.
2. Maximum test duration 2.0ms, one output loaded at a time.
3. I_{IN} and I_{CC} @ 3.0V are guaranteed to be less than or equal to the respective limit @ 5.5V V_{CC}.

©1988 Fairchild Semiconductor Corporation

DC Electrical Characteristics for ACT

Symbol	Parameter	V_{CC} (V)	Conditions	T_A = +25°C	T_A = –40°C to +85°C		Units
				Typ.	Guaranteed Limits		
V_{IH}	Minimum HIGH Level Input Voltage	4.5	V_{OUT} = 0.1V or V_{CC} – 0.1V	1.5	2.0	2.0	V
		5.5		1.5	2.0	2.0	
V_{IL}	Maximum LOW Level Input Voltage	4.5	V_{OUT} = 0.1V or V_{CC} – 0.1V	1.5	0.8	0.8	V
		5.5		1.5	0.8	0.8	
V_{OH}	Minimum HIGH Level Output Voltage	4.5	I_{OUT} = –50µA	4.49	4.4	4.4	V
		5.5		5.49	5.4	5.4	
		4.5	V_{IN} = V_{IL} or V_{IH}, I_{OH} = –24mA		3.86	3.76	
		5.5	V_{IN} = V_{IL} or V_{IH}, I_{OH} = –24mA(4)		4.86	4.76	
V_{OL}	Maximum LOW Level Output Voltage	4.5	I_{OUT} = 50µA	0.001	0.1	0.1	V
		5.5		0.001	0.1	0.1	
		4.5	V_{IN} = V_{IL} or V_{IH}, I_{OL} = 24mA		0.36	0.44	
		5.5	V_{IN} = V_{IL} or V_{IH}, I_{OL}= 24mA(4)		0.36	0.44	
I_{IN}	Maximum Input Leakage Current	5.5	V_I = V_{CC}, GND		±0.1	±1.0	µA
I_{CCT}	Maximum I_{CC}/Input	5.5	V_I = V_{CC} – 2.1V	0.6		1.5	mA
I_{OLD}	Minimum Dynamic Output Current(5)	5.5	V_{OLD} = 1.65V Max.			75	mA
I_{OHD}		5.5	V_{OHD} = 3.85V Min.			–75	mA
I_{CC}	Maximum Quiescent Supply Current	5.5	V_{IN} = V_{CC} or GND		2.0	20.0	µA

Notes:

4. All outputs loaded; thresholds on input associated with output under test.

©1988 Fairchild Semiconductor Corporation

AC Electrical Characteristics for AC

Symbol	Parameter	V_{CC} (V)[6]	T_A = +25°C, C_L = 50pF			T_A = –40°C to +85°C, C_L = 50pF		Units
			Min.	Typ.	Max.	Min.	Max.	
f_{MAX}	Maximum Clock Frequency	3.3	100	125		95		MHz
		5.0	140	160		125		
t_{PLH}	Propagation Delay, $\overline{C}_{Dn}$ or $\overline{S}_{Dn}$ to Q_n or $\overline{Q}_n$	3.3	3.5	8.0	12.0	2.5	13.0	ns
		5.0	2.5	6.0	9.0	2.0	10.0	
t_{PHL}	Propagation Delay, $\overline{C}_{Dn}$ or $\overline{S}_{Dn}$ to Q_n or $\overline{Q}_n$	3.3	4.0	10.5	12.0	3.5	13.5	ns
		5.0	3.0	8.0	9.5	2.5	10.5	
t_{PLH}	Propagation Delay, CP_n to Q_n or $\overline{Q}_n$	3.3	4.5	8.0	13.5	4.0	16.0	ns
		5.0	3.5	6.0	10.0	3.0	10.5	
t_{PHL}	Propagation Delay, CP_n to Q_n or $\overline{Q}_n$	3.3	3.5	8.0	14.0	3.5	14.5	ns
		5.0	2.5	6.0	10.0	2.5	10.5	

Note:

5. Voltage range 3.3 is 3.3V ± 0.3V. Voltage range 5.0 is 5.0V ± 0.5V.

AC Operating Requirements for AC

Symbol	Parameter	V_{CC} (V)[7]	T_A = +25°C, C_L = 50pF	T_A = –40°C to +85°C, C_L = 50 pF		Units
			Typ.	Guaranteed Minimum		
t_S	Set-up Time, HIGH or LOW, D_n to CP_n	3.3	1.5	4.0	4.5	ns
		5.0	1.0	3.0	3.0	
t_H	Hold Time, HIGH or LOW, D_n to CP_n	3.3	–2.0	0.5	0.5	ns
		5.0	–1.5	0.5	0.5	
t_W	CP_n or $\overline{C}_{Dn}$ or $\overline{S}_{Dn}$ Pulse Width	3.3	3.0	5.5	7.0	ns
		5.0	2.5	4.5	5.0	
t_{rec}	Recovery Time, $\overline{C}_{Dn}$ or $\overline{S}_{Dn}$ to CP	3.3	–2.5	0	0	ns
		5.0	–2.0	0	0	

Note:

6. Voltage range 3.3 is 3.3V ± 0.3V. Voltage range 5.0 is 5.0V ± 0.5V.

©1988 Fairchild Semiconductor Corporation

AC Electrical Characteristics for ACT

Symbol	Parameter	V_{CC} (V)[8]	T_A = +25°C, C_L = 50pF			T_A = –40°C to +85°C, C_L = 50pF		Units
			Min.	Typ.	Max.	Min.	Max.	
f_{MAX}	Maximum Clock Frequency	5.0	145	210		125		MHz
t_{PLH}	Propagation Delay, $\overline{C}_{Dn}$ or $\overline{S}_{Dn}$ to Q_n or $\overline{Q}_n$	5.0	3.0	5.5	9.5	2.5	10.5	ns
t_{PHL}	Propagation Delay, $\overline{C}_{Dn}$ or $\overline{S}_{Dn}$ to Q_n or $\overline{Q}_n$	5.0	3.0	6.0	10.0	3.0	11.5	ns
t_{PLH}	Propagation Delay, CP_n to Q_n or $\overline{Q}_n$	5.0	4.0	7.5	11.0	4.0	13.0.	ns
t_{PHL}	Propagation Delay, CP_n to Q_n or $\overline{Q}_n$	5.0	3.5	6.0	10.0	3.0	11.5	ns

Note:

7. Voltage range 5.0 is 5.0V ± 0.5V.

AC Operating Requirements for ACT

Symbol	Parameter	V_{CC} (V)[9]	T_A = +25°C, C_L = 50pF	T_A = –40°C to +85°C, C_L = 50pF		Units
			Typ.	Guaranteed Minimum		
t_S	Set-up Time, HIGH or LOW, D_n to CP_n	5.0	1.0	3.0	3.5	ns
t_H	Hold Time, HIGH or LOW, D_n to CP_n	5.0	–0.5	1.0	1.0	ns
t_W	CP_n or $\overline{C}_{Dn}$ or $\overline{S}_{Dn}$ Pulse Width	5.0	3.0	5.0	6.0	ns
t_{rec}	Recovery Time, $\overline{C}_{Dn}$ or $\overline{S}_{Dn}$ to CP	5.0	–2.5	0	0	ns

Note:

8. Voltage range 5.0 is 5.0V ± 0.5V.

Capacitance

Symbol	Parameter	Conditions	Typ.	Units
C_{IN}	Input Capacitance	V_{CC} = OPEN	4.5	pF
C_{PD}	Power Dissipation Capacitance	V_{CC} = 5.0V	35.0	pF

©1988 Fairchild Semiconductor Corporation

Physical Dimensions

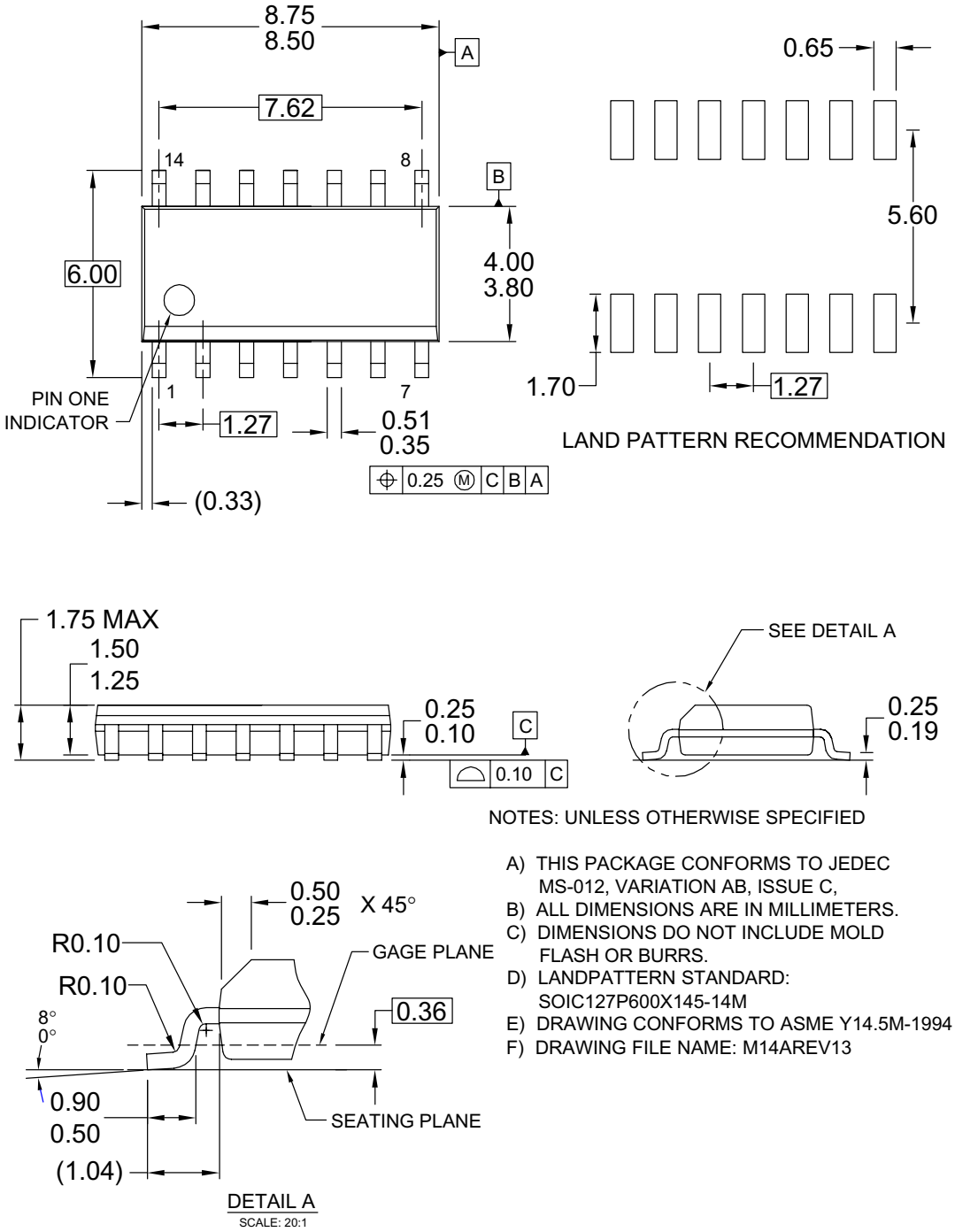

Figure 1. 14-Lead Small Outline Integrated Circuit (SOIC), JEDEC MS-012, 0.150" Narrow

Package drawings are provided as a service to customers considering Fairchild components. Drawings may change in any manner without notice. Please note the revision and/or date on the drawing and contact a Fairchild Semiconductor representative to verify or obtain the most recent revision. Package specifications do not expand the terms of Fairchild's worldwide terms and conditions, specifically the warranty therein, which covers Fairchild products.

Always visit Fairchild Semiconductor's online packaging area for the most recent package drawings:

http://www.fairchildsemi.com/packaging/

Physical Dimensions (Continued)

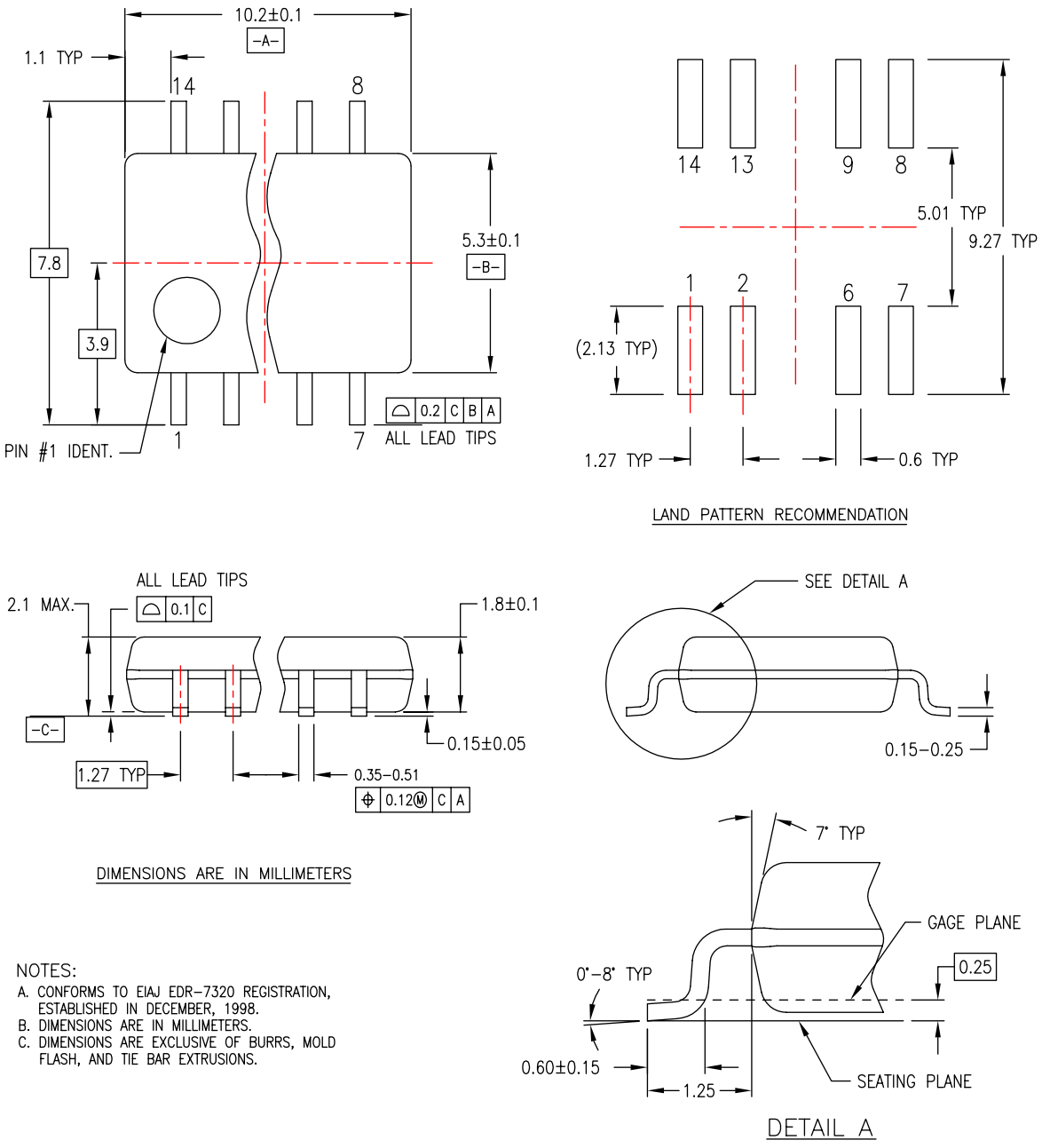

NOTES:

A. CONFORMS TO EIAJ EDR-7320 REGISTRATION, ESTABLISHED IN DECEMBER, 1998.
B. DIMENSIONS ARE IN MILLIMETERS.
C. DIMENSIONS ARE EXCLUSIVE OF BURRS, MOLD FLASH, AND TIE BAR EXTRUSIONS.

M14DREVC

Figure 2. 14-Lead Small Outline Package (SOP), EIAJ TYPE II, 5.3mm Wide

Package drawings are provided as a service to customers considering Fairchild components. Drawings may change in any manner without notice. Please note the revision and/or date on the drawing and contact a Fairchild Semiconductor representative to verify or obtain the most recent revision. Package specifications do not expand the terms of Fairchild's worldwide terms and conditions, specifically the warranty therein, which covers Fairchild products.

Always visit Fairchild Semiconductor's online packaging area for the most recent package drawings:

http://www.fairchildsemi.com/packaging/

Physical Dimensions (Continued)

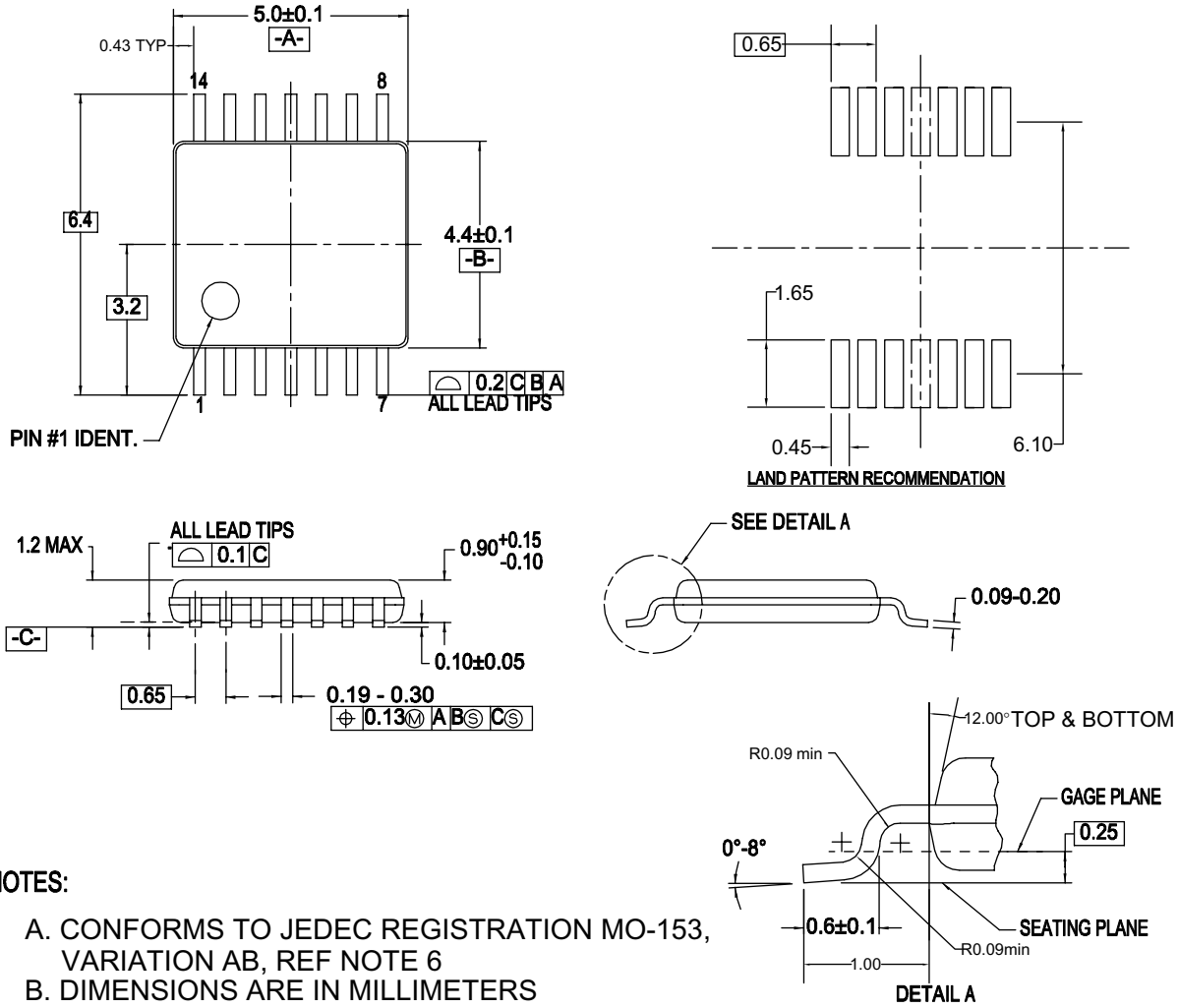

NOTES:

A. CONFORMS TO JEDEC REGISTRATION MO-153, VARIATION AB, REF NOTE 6

B. DIMENSIONS ARE IN MILLIMETERS

C. DIMENSIONS ARE EXCLUSIVE OF BURRS, MOLD FLASH, AND TIE BAR EXTRUSIONS

D. DIMENSIONING AND TOLERANCES PER ANSI Y14.5M, 1982

E. LANDPATTERN STANDARD: SOP65P640X110-14M

F. DRAWING FILE NAME: MTC14REV6

Figure 3. 14-Lead Thin Shrink Small Outline Package (TSSOP), JEDEC MO-153, 4.4mm Wide

Package drawings are provided as a service to customers considering Fairchild components. Drawings may change in any manner without notice. Please note the revision and/or date on the drawing and contact a Fairchild Semiconductor representative to verify or obtain the most recent revision. Package specifications do not expand the terms of Fairchild's worldwide terms and conditions, specifically the warranty therein, which covers Fairchild products.

Always visit Fairchild Semiconductor's online packaging area for the most recent package drawings:

http://www.fairchildsemi.com/packaging/

Physical Dimensions (Continued)

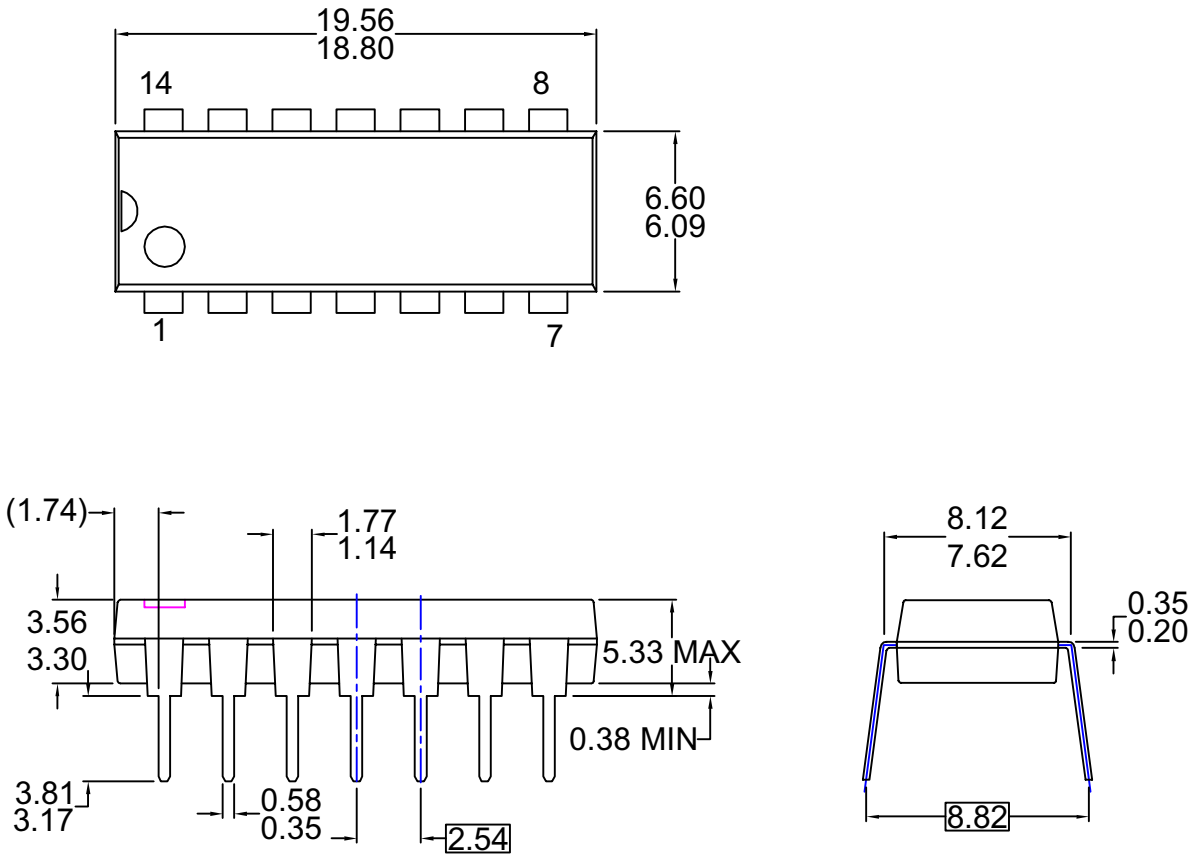

NOTES: UNLESS OTHERWISE SPECIFIED

THIS PACKAGE CONFORMS TO

A) JEDEC MS-001 VARIATION BA

B) ALL DIMENSIONS ARE IN MILLIMETERS.
DIMENSIONS ARE EXCLUSIVE OF BURRS,

C) MOLD FLASH, AND TIE BAR EXTRUSIONS.

D) DIMENSIONS AND TOLERANCES PER
ASME Y14.5-1994

E) DRAWING FILE NAME: MKT-N14AREV7

Figure 4. 14-Lead Plastic Dual-In-Line Package (PDIP), JEDEC MS-001, 0.300" Wide

Package drawings are provided as a service to customers considering Fairchild components. Drawings may change in any manner without notice. Please note the revision and/or date on the drawing and contact a Fairchild Semiconductor representative to verify or obtain the most recent revision. Package specifications do not expand the terms of Fairchild's worldwide terms and conditions, specifically the warranty therein, which covers Fairchild products.

Always visit Fairchild Semiconductor's online packaging area for the most recent package drawings:

http://www.fairchildsemi.com/packaging/

FAIRCHILD SEMICONDUCTOR®

TRADEMARKS

The following includes registered and unregistered trademarks and service marks, owned by Fairchild Semiconductor and/or its global subsidiaries, and is not intended to be an exhaustive list of all such trademarks.

ACEx®
Build it Now™
CorePLUS™
CROSSVOLT™
CTL™
Current Transfer Logic™
EcoSPARK®
EZSWITCH™ *
™
®
Fairchild®
Fairchild Semiconductor®
FACT Quiet Series™
FACT®
FAST®
FastvCore™
FlashWriter® *
FPS™
FRFET®
Global Power Resource℠
Green FPS™
Green FPS™ e-Series™
GTO™
i-Lo™
IntelliMAX™
ISOPLANAR™
MegaBuck™
MICROCOUPLER™
MicroFET™
MicroPak™
MillerDrive™
Motion-SPM™
OPTOLOGIC®
OPTOPLANAR®
®
PDP-SPM™
Power220®
Power247®
POWEREDGE®
Power-SPM™
PowerTrench®
Programmable Active Droop™
QFET®
QS™
QT Optoelectronics™
Quiet Series™
RapidConfigure™
SMART START™
SPM®
STEALTH™
SuperFET™
SuperSOT™-3
SuperSOT™-6
SuperSOT™-8
SyncFET™
SYSTEM GENERAL ®
The Power Franchise®
the power franchise
TinyBoost™
TinyBuck™
TinyLogic®
TINYOPTO™
TinyPower™
TinyPWM™
TinyWire™
µSerDes™
UHC®
Ultra FRFET™
UniFET™
VCX™

* EZSWITCH™ and FlashWriter® are trademarks of System General Corporation, used under license by Fairchild Semiconductor.

DISCLAIMER

FAIRCHILD SEMICONDUCTOR RESERVES THE RIGHT TO MAKE CHANGES WITHOUT FURTHER NOTICE TO ANY PRODUCTS HEREIN TO IMPROVE RELIABILITY, FUNCTION, OR DESIGN. FAIRCHILD DOES NOT ASSUME ANY LIABILITY ARISING OUT OF THE APPLICATION OR USE OF ANY PRODUCT OR CIRCUIT DESCRIBED HEREIN; NEITHER DOES IT CONVEY ANY LICENSE UNDER ITS PATENT RIGHTS, NOR THE RIGHTS OF OTHERS. THESE SPECIFICATIONS DO NOT EXPAND THE TERMS OF FAIRCHILD'S WORLDWIDE TERMS AND CONDITIONS, SPECIFICALLY THE WARRANTY THEREIN, WHICH COVERS THESE PRODUCTS.

LIFE SUPPORT POLICY

FAIRCHILD'S PRODUCTS ARE NOT AUTHORIZED FOR USE AS CRITICAL COMPONENTS IN LIFE SUPPORT DEVICES OR SYSTEMS WITHOUT THE EXPRESS WRITTEN APPROVAL OF FAIRCHILD SEMICONDUCTOR CORPORATION.

As used herein:

1. Life support devices or systems are devices or systems which, (a) are intended for surgical implant into the body or (b) support or sustain life, and (c) whose failure to perform when properly used in accordance with instructions for use provided in the labeling, can be reasonably expected to result in a significant injury of the user.
2. A critical component in any component of a life support, device, or system whose failure to perform can be reasonably expected to cause the failure of the life support device or system, or to affect its safety or effectiveness.

PRODUCT STATUS DEFINITIONS

Definition of Terms

Datasheet Identification	Product Status	Definition
Advance Information	Formative or In Design	This datasheet contains the design specifications for product development. Specifications may change in any manner without notice.
Preliminary	First Production	This datasheet contains preliminary data; supplementary data will be published at a later date. Fairchild Semiconductor reserves the right to make changes at any time without notice to improve design.
No Identification Needed	Full Production	This datasheet contains final specifications. Fairchild Semiconductor reserves the right to make changes at any time without notice to improve the design.
Obsolete	Not In Production	This datasheet contains specifications on a product that has been discontinued by Fairchild Semiconductor. The datasheet is printed for reference information only.

Rev. I32

©1988 Fairchild Semiconductor Corporation

ENTEGRECİ

Bu belge www.entegreci.com üzerinden sunulmaktadır.

Elektronik komponent tedarikinde Entegreci

Entegreci, Eskişehir merkezli, Türkiye geneline satış yapan bir elektronik komponent mağazasıdır. Entegreler (IC), mikrodenetleyiciler, transistörler, diyotlar, pasif elemanlar, konnektörler, modüller ve geliştirme kartları tek adetten seri üretim adetlerine kadar satılır. Ürün sayfalarında güncel stok durumunu, fiyatı ve datasheet bağlantısını bulabilirsiniz.

Parça koduyla arama

Üretici parça numarasını yazın; stok ve fiyatı hemen görün.

www.entegreci.com

Ürün kategorileri

Entegreden kapasitöre tüm elektronik komponent kategorileri.

Kategorilere göz atın

Üreticiler

Aradığınız üreticinin ürünlerini tek sayfada inceleyin.

Üreticileri görün

Toplu alım ve teklif

Listede olmayan ya da yüksek adetli parçalar için teklif isteyin.

Teklif isteyin

www.entegreci.com | **destek@entegreci.com** | **0850 305 90 34**

Entegreci is an online electronic components store based in Türkiye. Search by manufacturer part number to see stock, prices and datasheets for integrated circuits, microcontrollers, transistors, passive components and connectors, or request a quote for parts that are not listed.

Bu sayfa Entegreci tarafından eklenmiştir. Belgenin önceki sayfaları asıl yayıncısına aittir ve içeriği değiştirilmemiştir; en güncel sürüm için belgenin yayıncısına başvurun.