# DATA SHEET

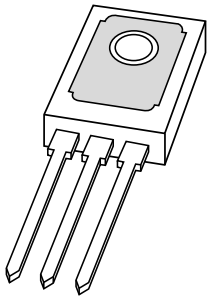

# BD136; BD138; BD140
## PNP power transistors

Product specification
Supersedes data of September 1994
File under Discrete Semiconductors, SC04

1997 Mar 26

Philips
Semiconductors

PHILIPS

# PNP power transistors BD136; BD138; BD140

## FEATURES

- High current (max. 1.5 A)
- Low voltage (max. 80 V).

## APPLICATIONS

- General purpose power applications, e.g. driver stages in hi-fi amplifiers and television circuits.

## DESCRIPTION

PNP power transistor in a TO-126; SOT32 plastic package. NPN complements: BD135, BD137 and BD139.

## PINNING

| PIN | DESCRIPTION |
|---|---|
| 1 | emitter |
| 2 | collector, connected to metal part of mounting surface |
| 3 | base |

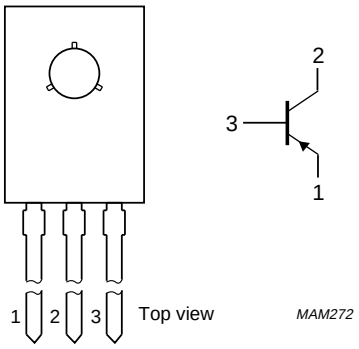


Fig.1 Simplified outline (TO-126; SOT32) and symbol.

## QUICK REFERENCE DATA

| SYMBOL | PARAMETER | CONDITIONS | MIN. | TYP. | MAX. | UNIT |
|---|---|---|---|---|---|---|
| $V_{CBO}$ | collector-base voltage | open emitter | | | | |
| | BD136 | | – | – | –45 | V |
| | BD138 | | – | – | –60 | V |
| | BD140 | | – | – | –100 | V |
| $V_{CEO}$ | collector-emitter voltage | open base | | | | |
| | BD136 | | – | – | –45 | V |
| | BD138 | | – | – | –60 | V |
| | BD140 | | – | – | –80 | V |
| $I_{CM}$ | peak collector current | | – | – | –2 | A |
| $P_{tot}$ | total power dissipation | $T_{mb} \leq 70$ °C | – | – | 8 | W |
| $h_{FE}$ | DC current gain | $I_C = -150$ mA; $V_{CE} = -2$ V | 40 | – | 250 | |
| $f_T$ | transition frequency | $I_C = -50$ mA; $V_{CE} = -5$ V; f = 100 MHz | – | 160 | – | MHz |

## LIMITING VALUES

In accordance with the Absolute Maximum Rating System (IEC 134).

| SYMBOL | PARAMETER | CONDITIONS | MIN. | MAX. | UNIT |
|---|---|---|---|---|---|
| $V_{CBO}$ | collector-base voltage | open emitter | | | |
| | BD136 | | – | –45 | V |
| | BD138 | | – | –60 | V |
| | BD140 | | – | –100 | V |
| $V_{CEO}$ | collector-emitter voltage | open base | | | |
| | BD136 | | – | –45 | V |
| | BD138 | | – | –60 | V |
| | BD140 | | – | –80 | V |
| $V_{EBO}$ | emitter-base voltage | open collector | – | –5 | V |
| $I_C$ | collector current (DC) | | – | –1.5 | A |
| $I_{CM}$ | peak collector current | | – | –2 | A |
| $I_{BM}$ | peak base current | | – | –1 | A |
| $P_{tot}$ | total power dissipation | $T_{mb} \leq 70$ °C | – | 8 | W |
| $T_{stg}$ | storage temperature | | –65 | +150 | °C |
| $T_j$ | junction temperature | | – | 150 | °C |
| $T_{amb}$ | operating ambient temperature | | –65 | +150 | °C |

## THERMAL CHARACTERISTICS

| SYMBOL | PARAMETER | CONDITIONS | VALUE | UNIT |
|---|---|---|---|---|
| $R_{th\ j\text{-}a}$ | thermal resistance from junction to ambient | note 1 | 100 | K/W |
| $R_{th\ j\text{-}mb}$ | thermal resistance from junction to mounting base | | 10 | K/W |

**Note**

1. Refer to TO-126 (SOT32) standard mounting conditions.

## CHARACTERISTICS

$T_j$ = 25 °C unless otherwise specified.

| SYMBOL | PARAMETER | CONDITIONS | MIN. | TYP. | MAX. | UNIT |
|---|---|---|---|---|---|---|
| $I_{CBO}$ | collector cut-off current | $I_E$ = 0; $V_{CB}$ = –30 V | – | – | –100 | nA |
| | | $I_E$ = 0; $V_{CB}$ = –30 V; $T_j$ = 125 °C | – | – | –10 | µA |
| $I_{EBO}$ | emitter cut-off current | $I_C$ = 0; $V_{EB}$ = –5 V | – | – | –100 | nA |
| $h_{FE}$ | DC current gain | $V_{CE}$ = –2 V; see Fig.2 | | | | |
| | | $I_C$ = –5 mA | 40 | – | – | |
| | | $I_C$ = –150 mA | 40 | – | 250 | |
| | | $I_C$ = –500 mA | 25 | – | – | |
| $h_{FE}$ | DC current gain | $I_C$ = –150 mA; $V_{CE}$ = –2 V; see Fig.2 | | | | |
| | BD136-10; BD138-10; BD140-10 | | 63 | – | 160 | |
| | BD136-16; BD138-16; BD140-16 | | 100 | – | 250 | |
| $V_{CEsat}$ | collector-emitter saturation voltage | $I_C$ = –500 mA; $I_B$ = –50 mA | – | – | –0.5 | V |
| $V_{BE}$ | base-emitter voltage | $I_C$ = –500 mA; $V_{CE}$ = –2 V | – | – | –1 | V |
| $f_T$ | transition frequency | $I_C$ = –50 mA; $V_{CE}$ = –5 V; f = 100 MHz | – | 160 | – | MHz |
| $\frac{h_{FE1}}{h_{FE2}}$ | DC current gain ratio of the complementary pairs | $\lvert I_C \rvert$ = 150 mA; $\lvert V_{CE} \rvert$ = 2 V | – | 1.3 | 1.6 | |

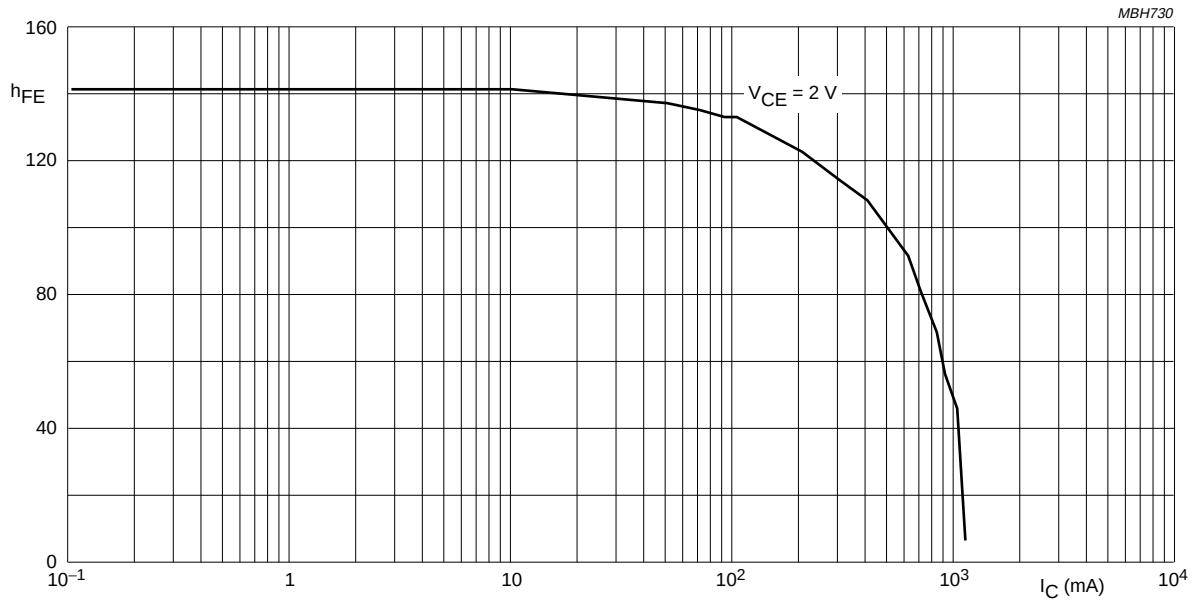


Fig.2 DC current gain; typical values.

## PACKAGE OUTLINE

**Plastic single-ended leaded (through hole) package; mountable to heatsink, 1 mounting hole; 3 leads SOT32**

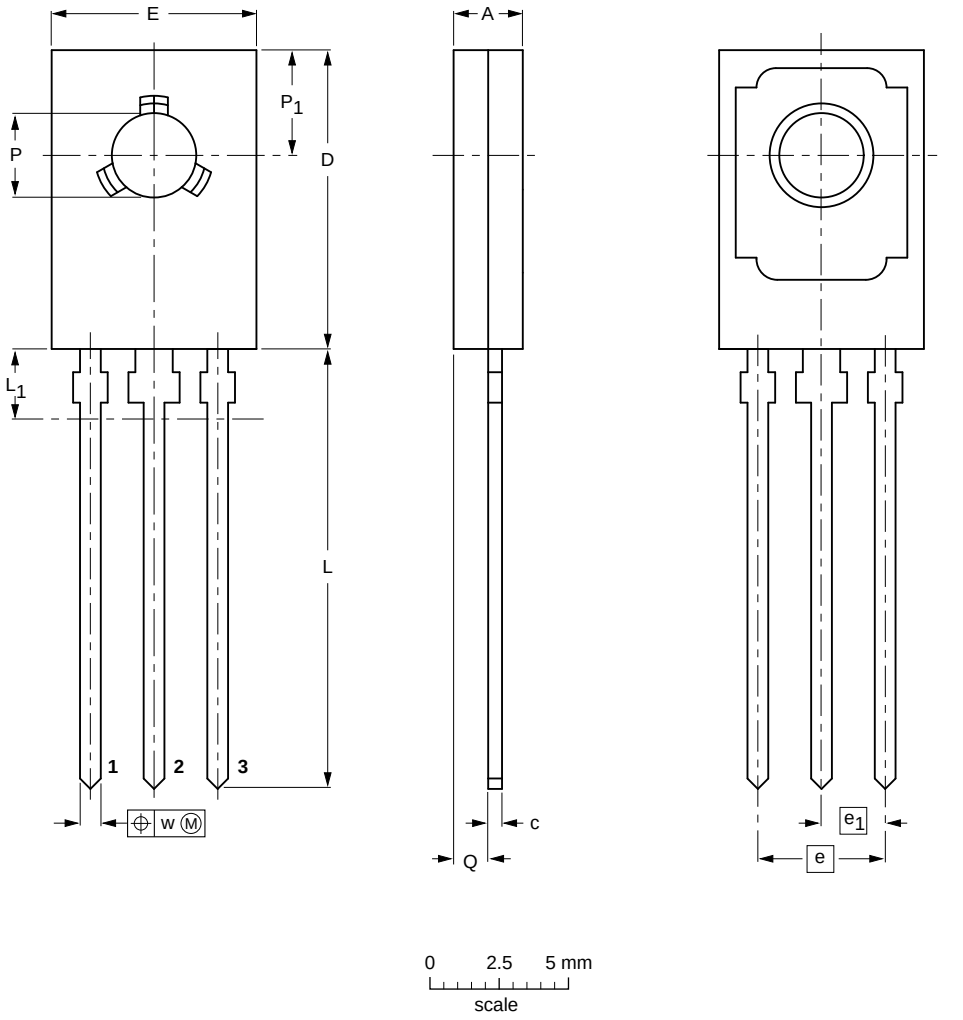


**DIMENSIONS (mm are the original dimensions)**

| UNIT | A | $b_p$ | c | D | E | e | $e_1$ | L | $L_1$(1) max | Q | P | $P_1$ | w |
|---|---|---|---|---|---|---|---|---|---|---|---|---|---|
| mm | 2.7<br>2.3 | 0.88<br>0.65 | 0.60<br>0.45 | 11.1<br>10.5 | 7.8<br>7.2 | 4.58 | 2.29 | 16.5<br>15.3 | 2.54 | 1.5<br>0.9 | 3.2<br>3.0 | 3.9<br>3.6 | 0.254 |

**Note**

1. Terminal dimensions within this zone are uncontrolled to allow for flow of plastic and terminal irregularities.

| OUTLINE VERSION | REFERENCES | | | | EUROPEAN PROJECTION | ISSUE DATE |
|---|---|---|---|---|---|---|
| | IEC | JEDEC | EIAJ | | | |
| SOT32 | | TO-126 | | | | 97-03-04 |

## DEFINITIONS

| **Data Sheet Status** | |
|---|---|
| Objective specification | This data sheet contains target or goal specifications for product development. |
| Preliminary specification | This data sheet contains preliminary data; supplementary data may be published later. |
| Product specification | This data sheet contains final product specifications. |
| **Limiting values** | |
| Limiting values given are in accordance with the Absolute Maximum Rating System (IEC 134). Stress above one or more of the limiting values may cause permanent damage to the device. These are stress ratings only and operation of the device at these or at any other conditions above those given in the Characteristics sections of the specification is not implied. Exposure to limiting values for extended periods may affect device reliability. | |
| **Application information** | |
| Where application information is given, it is advisory and does not form part of the specification. | |

## LIFE SUPPORT APPLICATIONS

These products are not designed for use in life support appliances, devices, or systems where malfunction of these products can reasonably be expected to result in personal injury. Philips customers using or selling these products for use in such applications do so at their own risk and agree to fully indemnify Philips for any damages resulting from such improper use or sale.

**NOTES**

# *Philips Semiconductors – a worldwide company*

**Argentina:** see South America

**Australia:** 34 Waterloo Road, NORTH RYDE, NSW 2113,
Tel. +61 2 9805 4455, Fax. +61 2 9805 4466

**Austria:** Computerstr. 6, A-1101 WIEN, P.O. Box 213,
Tel. +43 1 60 101, Fax. +43 1 60 101 1210

**Belarus:** Hotel Minsk Business Center, Bld. 3, r. 1211, Volodarski Str. 6,
220050 MINSK, Tel. +375 172 200 733, Fax. +375 172 200 773

**Belgium:** see The Netherlands

**Brazil:** see South America

**Bulgaria:** Philips Bulgaria Ltd., Energoproject, 15th floor,
51 James Bourchier Blvd., 1407 SOFIA,
Tel. +359 2 689 211, Fax. +359 2 689 102

**Canada:** PHILIPS SEMICONDUCTORS/COMPONENTS,
Tel. +1 800 234 7381

**China/Hong Kong:** 501 Hong Kong Industrial Technology Centre,
72 Tat Chee Avenue, Kowloon Tong, HONG KONG,
Tel. +852 2319 7888, Fax. +852 2319 7700

**Colombia:** see South America

**Czech Republic:** see Austria

**Denmark:** Prags Boulevard 80, PB 1919, DK-2300 COPENHAGEN S,
Tel. +45 32 88 2636, Fax. +45 31 57 1949

**Finland:** Sinikalliontie 3, FIN-02630 ESPOO,
Tel. +358 9 615800, Fax. +358 9 61580/xxx

**France:** 4 Rue du Port-aux-Vins, BP317, 92156 SURESNES Cedex,
Tel. +33 1 40 99 6161, Fax. +33 1 40 99 6427

**Germany:** Hammerbrookstraße 69, D-20097 HAMBURG,
Tel. +49 40 23 53 60, Fax. +49 40 23 536 300

**Greece:** No. 15, 25th March Street, GR 17778 TAVROS/ATHENS,
Tel. +30 1 4894 339/239, Fax. +30 1 4814 240

**Hungary:** see Austria

**India:** Philips INDIA Ltd, Shivsagar Estate, A Block, Dr. Annie Besant Rd.
Worli, MUMBAI 400 018, Tel. +91 22 4938 541, Fax. +91 22 4938 722

**Indonesia:** see Singapore

**Ireland:** Newstead, Clonskeagh, DUBLIN 14,
Tel. +353 1 7640 000, Fax. +353 1 7640 200

**Israel:** RAPAC Electronics, 7 Kehilat Saloniki St, TEL AVIV 61180,
Tel. +972 3 645 0444, Fax. +972 3 649 1007

**Italy:** PHILIPS SEMICONDUCTORS, Piazza IV Novembre 3,
20124 MILANO, Tel. +39 2 6752 2531, Fax. +39 2 6752 2557

**Japan:** Philips Bldg 13-37, Kohnan 2-chome, Minato-ku, TOKYO 108,
Tel. +81 3 3740 5130, Fax. +81 3 3740 5077

**Korea:** Philips House, 260-199 Itaewon-dong, Yongsan-ku, SEOUL,
Tel. +82 2 709 1412, Fax. +82 2 709 1415

**Malaysia:** No. 76 Jalan Universiti, 46200 PETALING JAYA, SELANGOR,
Tel. +60 3 750 5214, Fax. +60 3 757 4880

**Mexico:** 5900 Gateway East, Suite 200, EL PASO, TEXAS 79905,
Tel. +9-5 800 234 7381

**Middle East:** see Italy

**Netherlands:** Postbus 90050, 5600 PB EINDHOVEN, Bldg. VB,
Tel. +31 40 27 82785, Fax. +31 40 27 88399

**New Zealand:** 2 Wagener Place, C.P.O. Box 1041, AUCKLAND,
Tel. +64 9 849 4160, Fax. +64 9 849 7811

**Norway:** Box 1, Manglerud 0612, OSLO,
Tel. +47 22 74 8000, Fax. +47 22 74 8341

**Philippines:** Philips Semiconductors Philippines Inc.,
106 Valero St. Salcedo Village, P.O. Box 2108 MCC, MAKATI,
Metro MANILA, Tel. +63 2 816 6380, Fax. +63 2 817 3474

**Poland:** Ul. Lukiska 10, PL 04-123 WARSZAWA,
Tel. +48 22 612 2831, Fax. +48 22 612 2327

**Portugal:** see Spain

**Romania:** see Italy

**Russia:** Philips Russia, Ul. Usatcheva 35A, 119048 MOSCOW,
Tel. +7 095 755 6918, Fax. +7 095 755 6919

**Singapore:** Lorong 1, Toa Payoh, SINGAPORE 1231,
Tel. +65 350 2538, Fax. +65 251 6500

**Slovakia:** see Austria

**Slovenia:** see Italy

**South Africa:** S.A. PHILIPS Pty Ltd., 195-215 Main Road Martindale,
2092 JOHANNESBURG, P.O. Box 7430 Johannesburg 2000,
Tel. +27 11 470 5911, Fax. +27 11 470 5494

**South America:** Rua do Rocio 220, 5th floor, Suite 51,
04552-903 São Paulo, SÃO PAULO - SP, Brazil,
Tel. +55 11 821 2333, Fax. +55 11 829 1849

**Spain:** Balmes 22, 08007 BARCELONA,
Tel. +34 3 301 6312, Fax. +34 3 301 4107

**Sweden:** Kottbygatan 7, Akalla, S-16485 STOCKHOLM,
Tel. +46 8 632 2000, Fax. +46 8 632 2745

**Switzerland:** Allmendstrasse 140, CH-8027 ZÜRICH,
Tel. +41 1 488 2686, Fax. +41 1 481 7730

**Taiwan:** Philips Semiconductors, 6F, No. 96, Chien Kuo N. Rd., Sec. 1,
TAIPEI, Taiwan Tel. +886 2 2134 2870, Fax. +886 2 2134 2874

**Thailand:** PHILIPS ELECTRONICS (THAILAND) Ltd.,
209/2 Sanpavuth-Bangna Road Prakanong, BANGKOK 10260,
Tel. +66 2 745 4090, Fax. +66 2 398 0793

**Turkey:** Talatpasa Cad. No. 5, 80640 GÜLTEPE/ISTANBUL,
Tel. +90 212 279 2770, Fax. +90 212 282 6707

**Ukraine**: PHILIPS UKRAINE, 4 Patrice Lumumba str., Building B, Floor 7,
252042 KIEV, Tel. +380 44 264 2776, Fax. +380 44 268 0461

**United Kingdom:** Philips Semiconductors Ltd., 276 Bath Road, Hayes,
MIDDLESEX UB3 5BX, Tel. +44 181 730 5000, Fax. +44 181 754 8421

**United States:** 811 East Arques Avenue, SUNNYVALE, CA 94088-3409,
Tel. +1 800 234 7381

**Uruguay:** see South America

**Vietnam:** see Singapore

**Yugoslavia:** PHILIPS, Trg N. Pasica 5/v, 11000 BEOGRAD,
Tel. +381 11 625 344, Fax.+381 11 635 777

**For all other countries apply to:** Philips Semiconductors, Marketing & Sales Communications,
Building BE-p, P.O. Box 218, 5600 MD EINDHOVEN, The Netherlands, Fax. +31 40 27 24825

**Internet:** http://www.semiconductors.philips.com

© Philips Electronics N.V. 1997

SCA53

All rights are reserved. Reproduction in whole or in part is prohibited without the prior written consent of the copyright owner.

The information presented in this document does not form part of any quotation or contract, is believed to be accurate and reliable and may be changed without notice. No liability will be accepted by the publisher for any consequence of its use. Publication thereof does not convey nor imply any license under patent- or other industrial or intellectual property rights.

Printed in The Netherlands 117047/00/02/pp8 Date of release: 1997 Mar 26 Document order number: 9397 750 01992

*Let's make things better.*

**Philips Semiconductors**

PHILIPS

ENTEGRECİ

Bu belge www.entegreci.com üzerinden sunulmaktadır.

# Elektronik komponent tedarikinde Entegreci

Entegreci, Eskişehir merkezli, Türkiye geneline satış yapan bir elektronik komponent mağazasıdır. Entegreler (IC), mikrodenetleyiciler, transistörler, diyotlar, pasif elemanlar, konnektörler, modüller ve geliştirme kartları tek adetten seri üretim adetlerine kadar satılır. Ürün sayfalarında güncel stok durumunu, fiyatı ve datasheet bağlantısını bulabilirsiniz.

### Parça koduyla arama

Üretici parça numarasını yazın; stok ve fiyatı hemen görün.

**www.entegreci.com**

### Ürün kategorileri

Entegreden kapasitöre tüm elektronik komponent kategorileri.

**Kategorilere göz atın**

### Üreticiler

Aradığınız üreticinin ürünlerini tek sayfada inceleyin.

**Üreticileri görün**

### Toplu alım ve teklif

Listede olmayan ya da yüksek adetli parçalar için teklif isteyin.

**Teklif isteyin**

**www.entegreci.com** | **destek@entegreci.com** | **0850 305 90 34**

Entegreci is an online electronic components store based in Türkiye. Search by manufacturer part number to see stock, prices and datasheets for integrated circuits, microcontrollers, transistors, passive components and connectors, or request a quote for parts that are not listed.

Bu sayfa Entegreci tarafından eklenmiştir. Belgenin önceki sayfaları asıl yayıncısına aittir ve içeriği değiştirilmemiştir; en güncel sürüm için belgenin yayıncısına başvurun.