Description

The AP1501A series are monolithic ICs that are designed for a step-down DC/DC converter, and possess the ability to drive a 5A load without additional transistor component. Due to reducing the number of external component, the board space can be saved easily. The external shutdown function can be controlled by logic level and then come into standby mode. The internal compensation makes feedback control have good line and load regulation without external design. Regarding protected function, thermal shutdown is to prevent over temperature operating from damage, and current limit is against over current operating of the output switch. The AP1501A series operates at a switching frequency of 150kHz thus allowing smaller sized filter components than what would be needed with lower frequency switching regulators. Other features include a guaranteed ±4% tolerance on output voltage under specified input voltage and output load conditions, and ±15% on the oscillator frequency. The output version includes fixed 3.3V, 5V, 12V and an adjustable type. The packages are available in a standard 5-lead TO263-5, TO220-5 and TO220-5 (R) packages.

Features

- Output Voltage: 3.3V, 5V, 12V and Adjustable Output Version
- Adjustable Version Output Voltage Range, 1.23V to 37V±4%
- 150kHz ±15% Fixed Switching Frequency
- Voltage Mode Non-synchronous PWM Control
- Thermal-shutdown and Current-limit Protection
- ON/OFF Shutdown Control Input
- Operating voltage can be up to 40V
- Output Load Current: 5A
- Low power Standby Mode
- Built-in Switching Transistor On Chip
- **Totally Lead-Free & Fully RoHS Compliant (Notes 1 & 2)**
- **Halogen and Antimony Free. ''Green'' Devices (Note 3)**

Pin Assignments

(Top View)

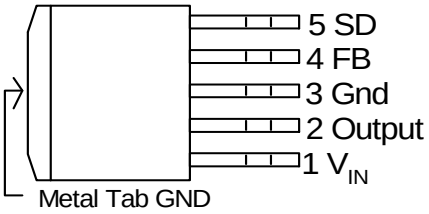

TO263-5

(Top View)

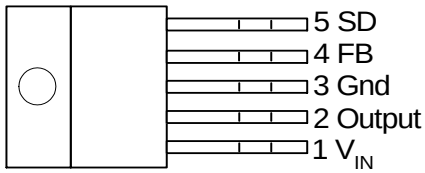

TO220-5/TO220-5 (R)

Applications

- Simple High-efficiency Step-down Regulator
- On-card Switching Regulators
- Positive to Negative Converter

Notes: 1. No purposely added lead. Fully EU Directive 2002/95/EC (RoHS) & 2011/65/EU (RoHS 2) compliant.
2. See http://www.diodes.com/quality/lead_free.html for more information about Diodes Incorporated's definitions of Halogen- and Antimony-free,"Green" and Lead-free.
3. Halogen- and Antimony-free "Green" products are defined as those which contain <900ppm bromine, <900ppm chlorine (<1500ppm total Br + Cl) and <1000ppm antimony compounds.

© Diodes Incorporated

Typical Applications Circuit

(1) Fixed Type Circuit

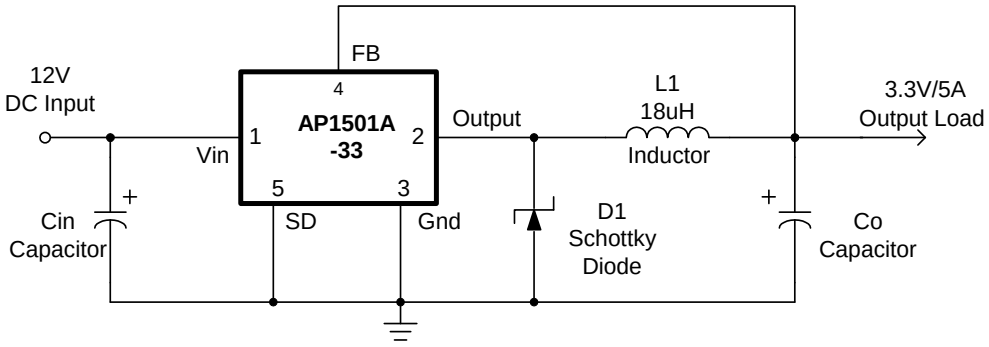

(2) Adjustable Type Circuit

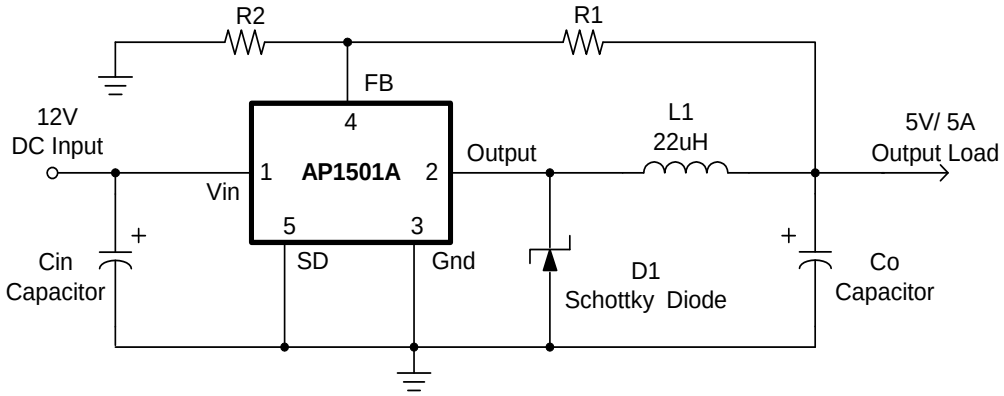

$$V_{OUT} = V_{FB} \times (1 + \frac{R1}{R2})$$

V_{FB} = 1.23V
R2 = 1kΩ to 3kΩ

(3) Delay Start Circuit

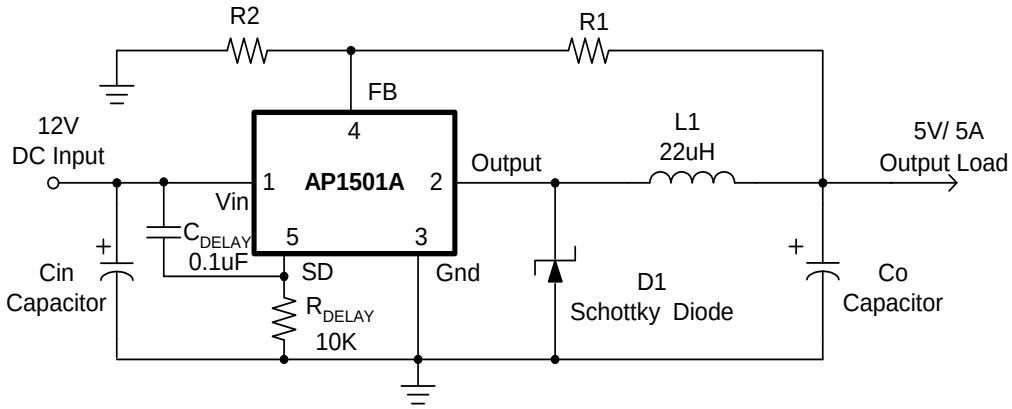

© Diodes Incorporated

Pin Descriptions

Pin Number	Pin Name	Description
1	V_{IN}	Operating voltage input
2	Output	Switching output
3	Gnd	Ground
4	FB	Output voltage feedback control
5	SD	ON/OFF shutdown

Functional Block Diagram

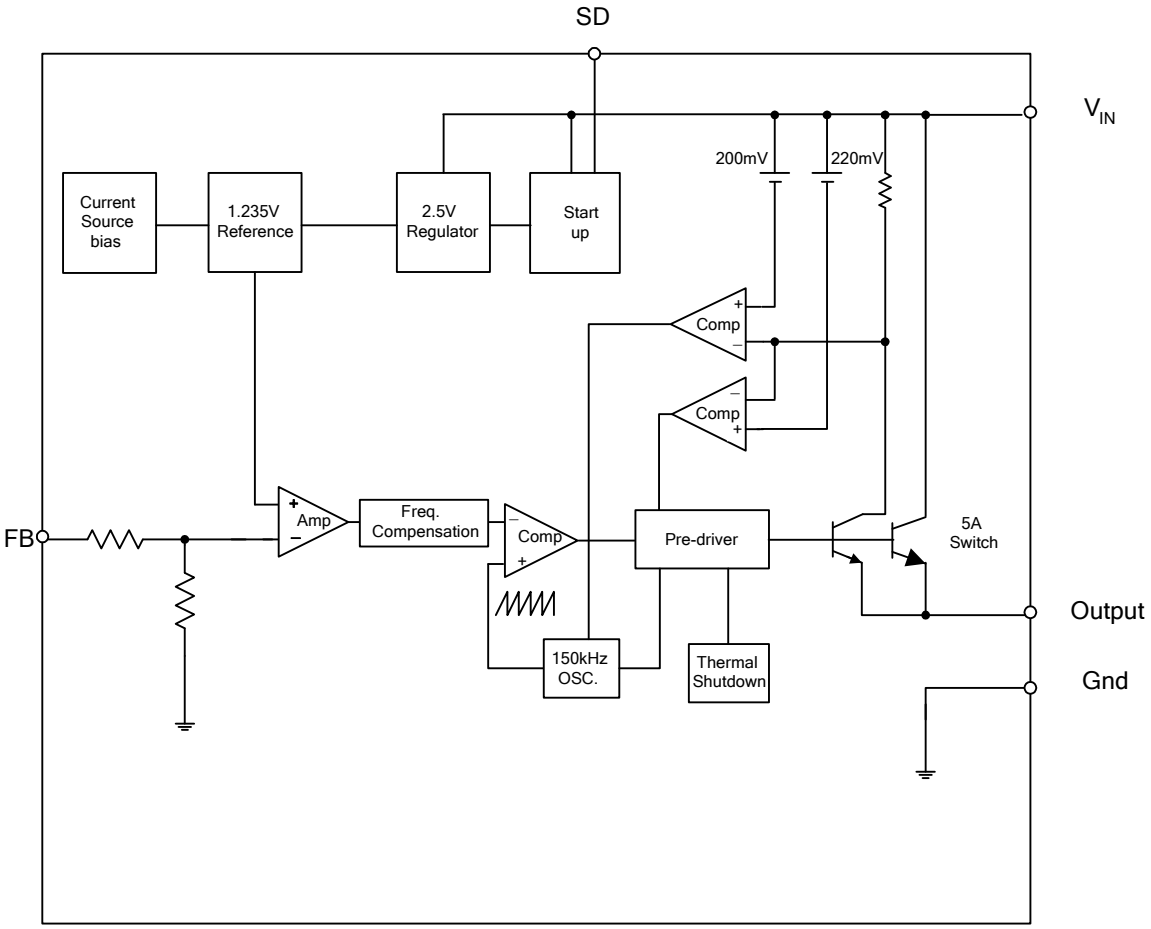

Absolute Maximum Ratings

Symbol	Parameter	Rating	Unit
ESD MM	Machine Model ESD Protection	400	V
V_{CC}	Supply Voltage	+45	V
V_{SD}	SD Pin Input Voltage	-0.3 to +40	V
V_{FB}	FB Pin Voltage	-0.3 to +40	V
V_{OUT}	Output Voltage to Ground	-1	V
P_D	Power Dissipation	Internally Limited	W
T_{ST}	Storage Temperature	-65 to +150	°C
T_J	Operating Junction Temperature	-20 to +125	°C

© Diodes Incorporated

Recommended Operating Conditions

Symbol	Parameter	Rating	Unit
V_{OP}	Operating Voltage	4.5 to 40	V
T_A	Operating Ambient Temperature	-20 to +85	°C

Electrical Characteristics (All Output Voltage Versions)

Unless otherwise specified, V_{IN} = 12V for 3.3V, 5V, adjustable version and V_{IN} = 24V for the 12V version. I_{LOAD} = 0.5A. Specifications with **boldface type** are for full operating temperature range, the other type are for T_J = +25°C.

Symbol	Parameter		Conditions	Min	Typ	Max	Unit
I_{FB}	Feedback Bias Current		V_{FB} = 1.3V (Adjustable version only)	—	40	60 100	nA
f_{OSC}	Oscillator Frequency		—	127 **110**	150 —	173 **173**	kHz
V_{SAT}	Saturation Voltage		I_{OUT} = 5A No outside circuit V_{FB} = 0V force driver on	—	1.5	1.6 **1.7**	V
DC	Max. Duty Cycle (ON)		V_{FB} = 0V force driver on	—	100	—	%
	Min. Duty Cycle (OFF)		V_{FB} = 12V force driver off	—	0	—	
I_{CL}	Current Limit		Peak current No outside circuit V_{FB} = 0 force driver on	5.5	6.0	6.5 **7.5**	A
I_L	Output = 0V	Output Leakage Current	No outside circuit V_{FB} = 12V force driver off (Note 4)	—	—	200	µA
	Output = -1V		V_{IN} = 40V	—	2	60	mA
I_Q	Quiescent Current		V_{FB} = 12V force driver off	—	5	10	mA
I_{STBY}	Standby Quiescent Current		SD pin = 5V V_{IN} = 40V	—	150	250 **300**	µA
V_{IL}	SD Pin Logic Input Threshold Voltage		Low (regulator ON)	—	1.3	0.6	V
V_{IH}			High (regulator OFF)	2.0		—	
I_H	SD Pin Logic Input Current		V_{LOGIC} = 2.5V (OFF)	—	15	25	µA
I_L	SD Pin Input Current		V_{LOGIC} = 0.5V (ON)	—	0.02	5	
θ_{JA}	Thermal Resistance Junction-to-Ambient		TO263-5 (Note 5)	—	37	—	°C/W
			TO220-5(R) (Note 5)	—	31	—	
θ_{JC}	Thermal Resistance Junction-to-Case		TO263-5 (Note 5)	—	6	—	°C/W
			TO220-5(R) (Note 5)	—	5	—	

Notes: 4. FB pin removed from output and connected to 0V to force the output transistor switch ON. FB pin removed from output and connected to 12V for the 3.3V, 5V, and the ADJ. version, and 15V for the 12V version, to force the output transistor switch OFF.
5. Test condition: Device mounted with copper area of approximately 3inch^2, 1oz, no air flow.

© Diodes Incorporated

Electrical Characteristics (Cont.)

Specifications with **boldface type** are for full operating temperature range, the other type are for T_J = +25°C.

	Symbol	Parameter	Conditions	Min	Typ	Max	Unit
AP1501A-ADJ	V_{FB}	Output Feedback	5V ≤ V_{IN} ≤ 40V 0.2A ≤ I_{LOAD} ≤ 5A V_{OUT} programmed for 3V	1.193/**1.18**	1.23	1.267/**1.28**	V
	η	Efficiency	V_{IN} = 12V, I_{LOAD}=5A	—	72	—	%
AP1501A-3.3V	V_{OUT}	Output Voltage	5.5V ≤ V_{IN} ≤ 40V 0.2A ≤ I_{LOAD} ≤ 5A	3.168/**3.135**	3.3	3.432/**3.465**	V
	η	Efficiency	V_{IN} = 12V, I_{LOAD} = 5A	—	71	—	%
AP1501A-5V	V_{OUT}	Output Voltage	8V ≤ V_{IN} ≤ 40V 0.2A ≤ I_{LOAD} ≤ 5A	4.8/**4.75**	5	5.2/**5.25**	V
	η	Efficiency	V_{IN} = 12V, I_{LOAD} = 5A	—	78	—	%
AP1501A-12V	V_{OUT}	Output Voltage	15V ≤ V_{IN} ≤ 40V 0.2A ≤ I_{LOAD} ≤ 5A	11.52/**11.4**	12	12.48/**12.6**	V
	η	Efficiency	V_{IN} = 16V, I_{LOAD} = 5A	—	88	—	%

© Diodes Incorporated

Typical Performance Characteristics

Typical Performance Characteristics
Normalized Output Voltage

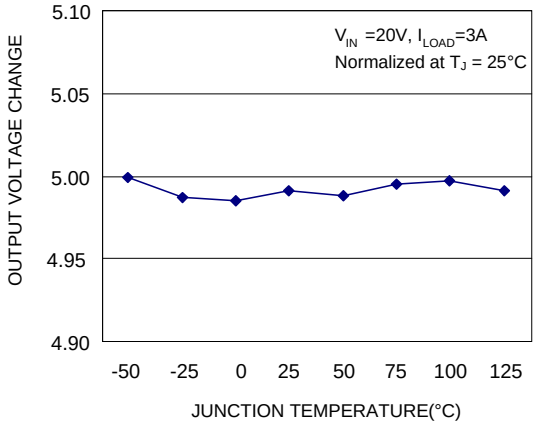

Efficiency

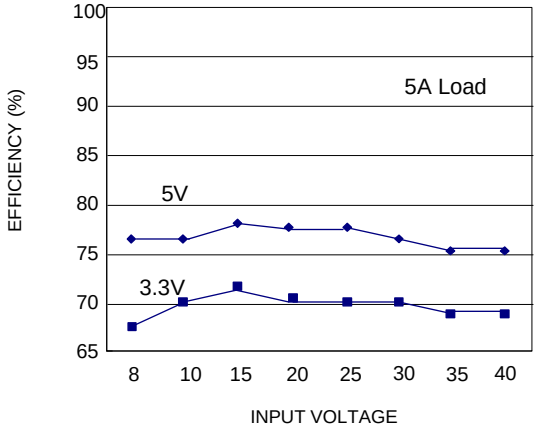

Switch Saturation Voltage

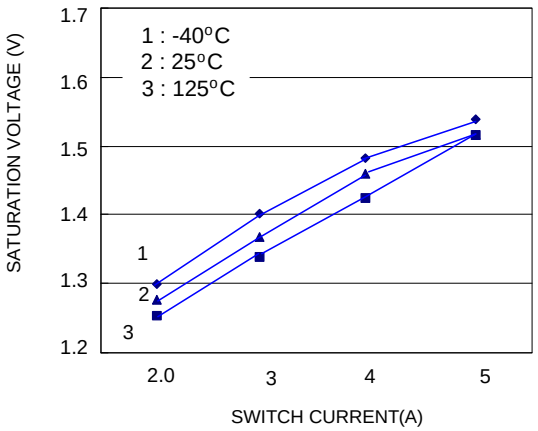

Switch Current Limit

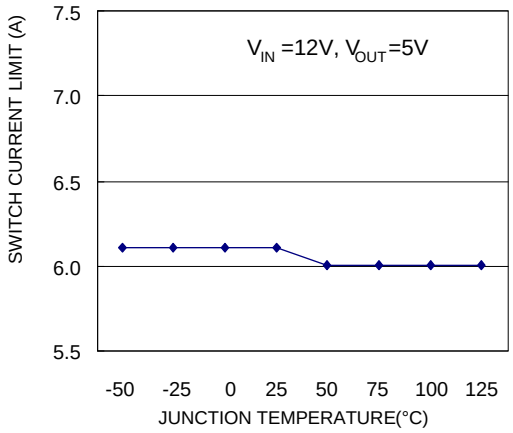

Operating Quiescent Current

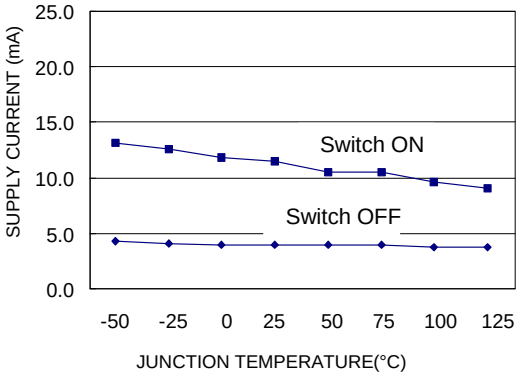

Shutdown Quiescent Current

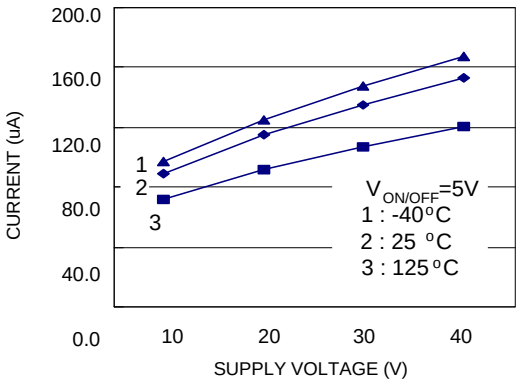

© Diodes Incorporated

Typical Performance Characteristics (Cont.)

Minimum Operating Supply Voltage

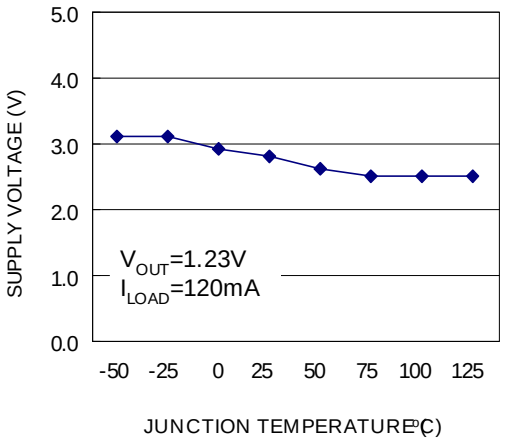

ON/OFF Threshold Voltage

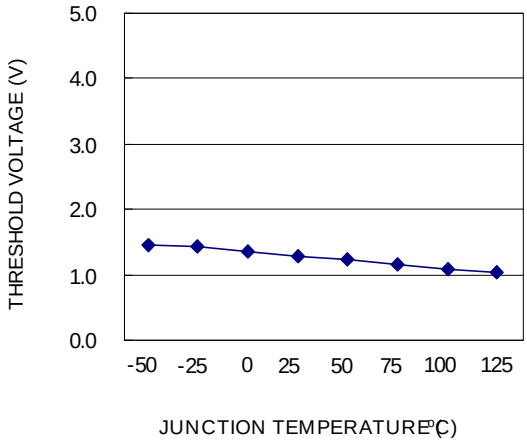

SD Pin Current (Sinking)

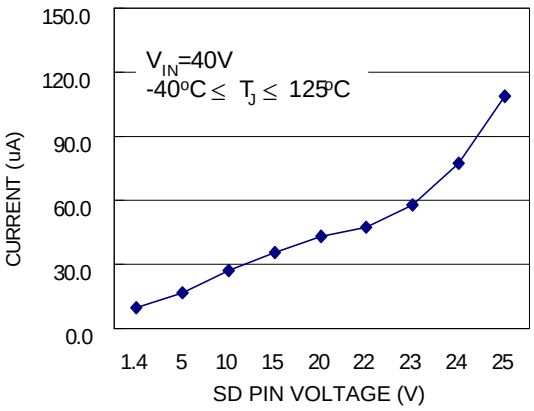

Switch Frequency

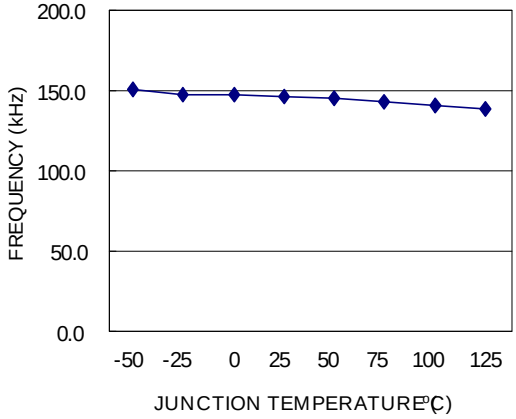

FB Pin Bias Current

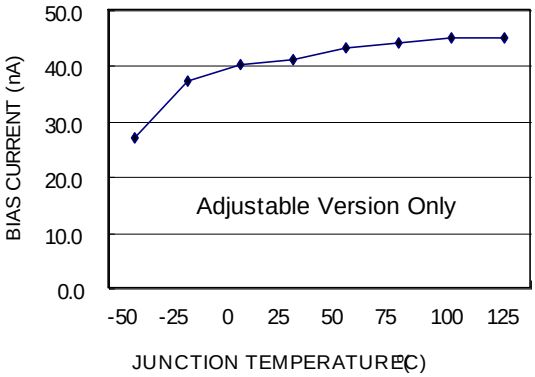

© Diodes Incorporated

Functional Description

Pin Functions

+V_{IN}

This is the positive input supply for the IC switching regulator. A suitable input bypass capacitor must be present at this pin to minimize voltage transients and to supply the switching currents needed by the regulator.

Ground

Circuit ground.

Output

Internal switch. The voltage at this pin switches between (+V_{IN} - V_{SAT}) and approximately -0.5V, with a duty cycle of approximately V_{OUT} / V_{IN}. To minimize coupling to sensitive circuitry, the PC board copper area connected to this pin should be kept a minimum.

Feedback

Senses the regulated output voltage to complete the feedback loop.

ON/OFF

Allows the switching regulator circuit to be shutdown using logic level signals thus dropping the total input supply current to approximately 150µA. Pulling this pin below a threshold voltage of approximately 1.3V turns the regulator on, and pulling this pin above 1.3V (up to a maximum of 40V) shuts the regulator down. If this shutdown feature is not needed, the SD pin can be wired to the ground pin or it can be left open, in either case the regulator will be in the ON condition.

Thermal Considerations

The AP1501A is available in two packages, a 5-pin surface mount TO263-5, TO220-5 and TO220-5 (R).

The TO220-5 and TO220-5 (R) packages need a heat sink under most conditions. The size of the heat sink depends on the input voltage, the output voltage, the load current and the ambient temperature. The AP1501A junction temperature rises above ambient temperature for a 5A load and different input and output voltages. The data for these curves was taken with the AP1501A (TO220-5 and TO220-5 (R) packages) operating as a buck switching regulator in an ambient temperature of +25°C (still air). These temperature rise numbers are all approximate and there are many factors that can affect these temperatures. Higher ambient temperatures require more heat sinking.

The TO263-5 surface mount package tab is designed to be soldered to the copper on a printed circuit board. The copper and the board are the heat sink for this package and the other heat producing components, such as the catch diode and inductor. The PC board copper area that the package is soldered to should be at least 0.8 inch^2, and ideally should have 2 or more square inches of 2 oz. Additional copper area improves the thermal characteristics, but with copper areas greater than approximately 6 inch^2, only small improvements in heat dissipation are realized. If further thermal improvements are needed, double sided, multilayer PC boards with large copper areas and/or airflow are recommended.

The AP1501A (TO263-5 package) junction temperature rise above ambient temperature with a 2A load for various input and output voltages. This data was taken with the circuit operating as a buck switching regulator with all components mounted on a PC board to simulate the junction temperature under actual operating conditions. This curve can be used for a quick check for the approximate junction temperature for various conditions, but be aware that there are many factors that can affect the junction temperature. When load currents higher than 3A are used, double sided or multilayer PC boards with large copper areas and/or airflow might be needed, especially for high ambient temperatures and high output voltages.

For the best thermal performance, wide copper traces and generous amounts of printed circuit board copper should be used in the board layout. (Once exception to this is the Output pin, which should not have large areas of copper.) Large areas of copper provide the best transfer of heat (lower thermal resistance) to the surrounding air, and moving air lowers the thermal resistance even further.

Package thermal resistance and junction temperature rise numbers are all approximate, and there are many factors that will affect these numbers. Some of these factors include board size, shape, thickness, position, location, and even board temperature. Other factors are, trace width, total printed circuit copper area, copper thickness, single or double-sided, multilayer board and the amount of solder on the board. The effectiveness of the PC board to dissipate heat also depends on the size, quantity and spacing of other components on the board, as well as whether the surrounding air is still or moving.

Furthermore, some of these components such as the catch diode will add heat to the PC board and the heat can vary as the input voltage changes. For the inductor, depending on the physical size, type of core material and the DC resistance, it could either act as a heat sink taking heat away from the board, or it could add heat to the board.

© Diodes Incorporated

Ordering Information

AP1501A XX XXX X - X

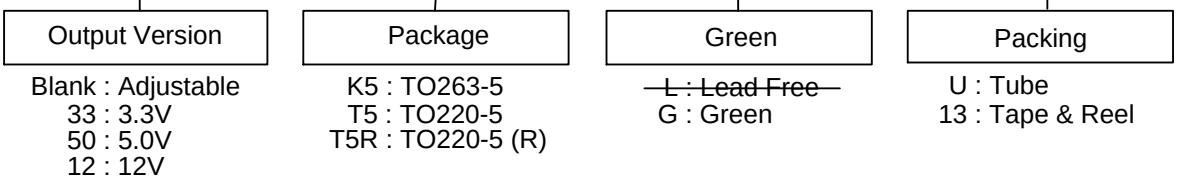

Device (Note 6)	Voltage	Package code	Package (Note 7)	Lead Free/ Green	Quantity	Part Number Suffix		Status (Note 6)	Alternative
						Tube	13''Tape and reel		
AP1501A-12K5G-13	12	K5	TO263-5	Green	800	NA	-13	In production	—
AP1501A-33K5G-13	33	K5	TO263-5	Green	800	NA	-13	In production	—
AP1501A-50K5G-13	50	K5	TO263-5	Green	800	NA	-13	In production	—
AP1501A-K5G-13	ADJ	K5	TO263-5	Green	800	NA	-13	In production	—
AP1501A-12T5RG-U	12	T5R	TO220-5 (R)	Green	50	-U	NA	End of Life	None
AP1501A-33T5RG-U	33	T5R	TO220-5 (R)	Green	50	-U	NA	End of Life	None
AP1501A-50T5RG-U	50	T5R	TO220-5 (R)	Green	50	-U	NA	End of Life	None
AP1501A-T5RG-U	ADJ	T5R	TO220-5 (R)	Green	50	-U	NA	NRND	None
AP1501A-12T5G-U	12	T5	TO220-5	Green	50	-U	NA	NRND	None
AP1501A-33T5G-U	33	T5	TO220-5	Green	50	-U	NA	NRND	None
AP1501A-50T5G-U	50	T5	TO220-5	Green	50	-U	NA	NRND	None
AP1501A-T5G-U	ADJ	T5	TO220-5	Green	50	-U	NA	NRND	None
AP1501A-12K5G-U	12	K5	TO263-5	Green	50	-U	NA	End of Life	AP1501A-12K5G-13
AP1501A-33K5G-U	33	K5	TO263-5	Green	50	-U	NA	NRND	AP1501A-33K5G-13
AP1501A-50K5G-U	50	K5	TO263-5	Green	50	-U	NA	NRND	AP1501A-50K5G-13
AP1501A-K5G-U	ADJ	K5	TO263-5	Green	50	-U	NA	End of Life	AP1501A-K5G-13

Notes: 6. All AP1501A-XXK5Lvariants are End of Life and the closest alternative is the AP1501A-XXK5G-13.
All AP1501A-XXT5RL and AP1501A-XXT5L variants are End of Life without any alternative.
All AP1501A-XXT5G-U (TO220-5) variants are Not Recommended for New Design (NRND) without any alternative.
7. For packaging details, go to our website at: https://www.diodes.com/design/support/packaging/diodes-packaging/diodes-package-outlines-and-pad-layouts/.

© Diodes Incorporated

Marking Information (Note 6)

(1) TO263-5

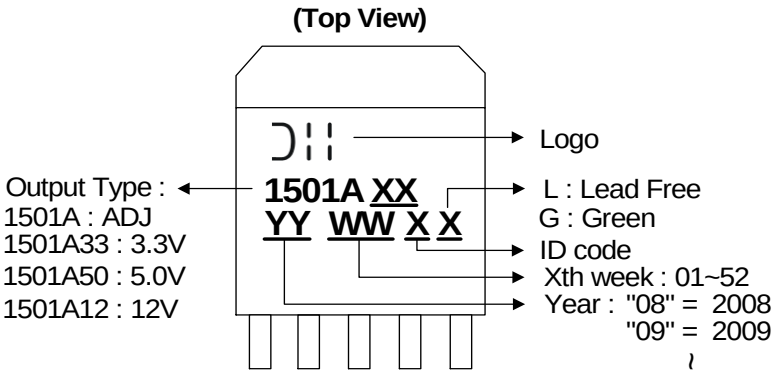

(2) TO220-5/TO220-5 (R)

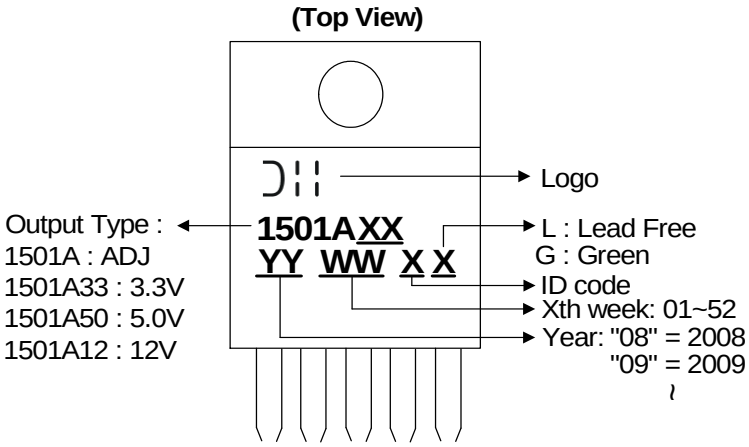

© Diodes Incorporated

Package Outline Dimensions

Please see http://www.diodes.com/package-outlines.html for the latest version.

(1) Package Type: TO263-5

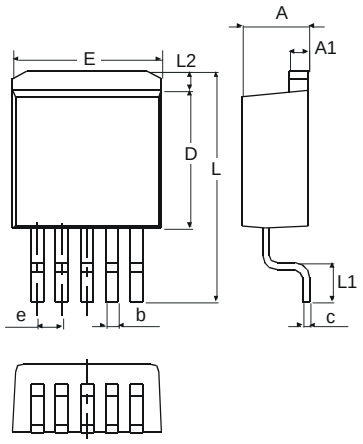

TO263-5		
Dim	**Min**	**Max**
A	4.07	4.85
A1	1.14	1.40
b	0.66	1.02
c	0.36	0.64
D	8.65	9.65
E	9.78	10.54
e	1.57	1.85
L	14.61	15.88
L1	2.29	2.79
L2	-	2.92
All Dimensions in mm		

(2) Package Type: TO220-5

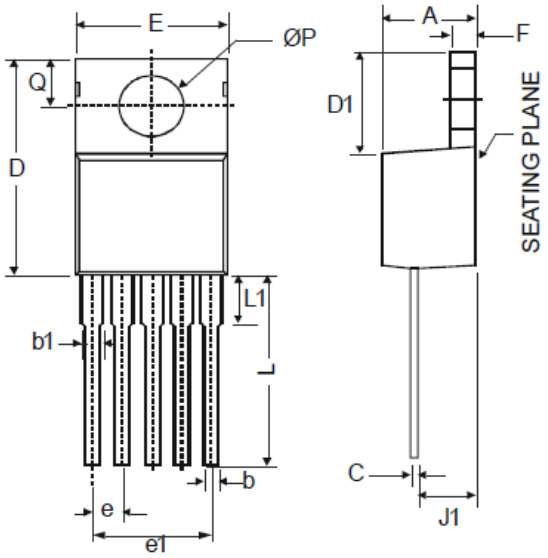

TO220-5		
Dim	**Min**	**Max**
A	3.55	4.85
b	0.51	1.14
b1	1.14	1.78
C	0.31	1.14
D	14.20	16.50
D1	5.84	6.86
E	9.78	10.54
e	1.6	1.8
e1	6.6	7.0
F	0.51	1.40
J1	2.03	2.92
L	12.72	14.72
L1	3.66	6.35
P	3.53	4.09
Q	2.54	3.43
All Dimensions in mm		

© Diodes Incorporated

Package Outline Dimensions (Cont.)

Please see http://www.diodes.com/package-outlines.html for the latest version.

(3) Package Type: TO220-5 (R)

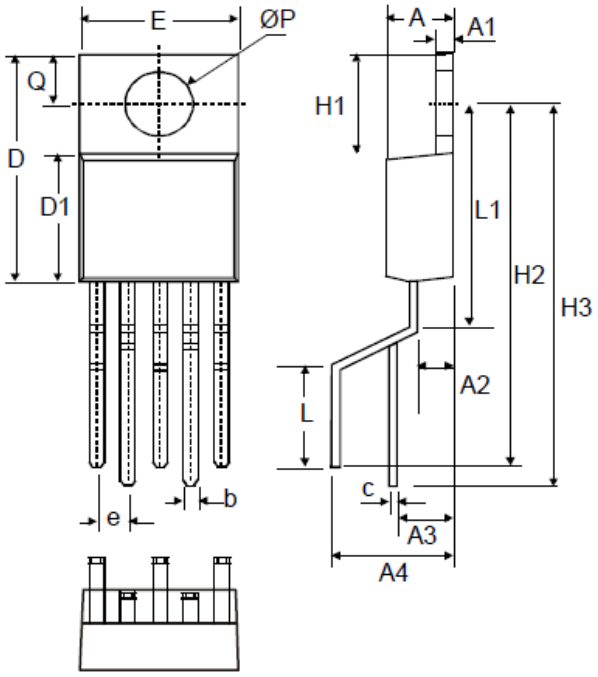

TO220-5(R)			
Dim	**Min**	**Typ**	**Max**
A	4.37	4.57	4.77
A1	1.12	1.27	1.40
A2	2.45	2.65	2.85
A3	4.10	4.40	4.70
A4	7.95	8.25	8.55
b	0.64	0.79	0.94
c	0.35	0.38	0.55
D	14.80	15.00	15.20
D1	8.50	8.70	8.90
e	-	1.70	-
E	9.96	10.16	10.36
H1	6.10	6.30	6.50
H2	21.32	22.12	22.92
H3	24.15	24.95	25.75
L	-	6.30	-
L1	13.10	13.50	13.90
P	3.64	3.84	4.04
Q	2.55	2.75	2.95
All Dimensions in mm			

Suggested Pad Layout

Please see http://www.diodes.com/package-outlines.html for the latest version.

(1) Package Type: TO263-5

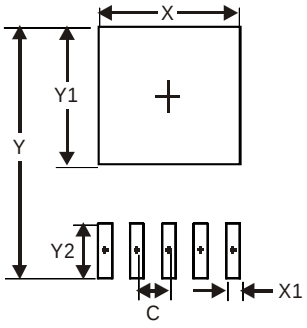

Dimensions	Value (in mm)
X	10.9
X1	1.05
Y	15.7
Y1	9.1
Y2	2.5
C	1.7

© Diodes Incorporated

IMPORTANT NOTICE

DIODES INCORPORATED MAKES NO WARRANTY OF ANY KIND, EXPRESS OR IMPLIED, WITH REGARDS TO THIS DOCUMENT, INCLUDING, BUT NOT LIMITED TO, THE IMPLIED WARRANTIES OF MERCHANTABILITY AND FITNESS FOR A PARTICULAR PURPOSE (AND THEIR EQUIVALENTS UNDER THE LAWS OF ANY JURISDICTION).

Diodes Incorporated and its subsidiaries reserve the right to make modifications, enhancements, improvements, corrections or other changes without further notice to this document and any product described herein. Diodes Incorporated does not assume any liability arising out of the application or use of this document or any product described herein; neither does Diodes Incorporated convey any license under its patent or trademark rights, nor the rights of others. Any Customer or user of this document or products described herein in such applications shall assume all risks of such use and will agree to hold Diodes Incorporated and all the companies whose products are represented on Diodes Incorporated website, harmless against all damages.

Diodes Incorporated does not warrant or accept any liability whatsoever in respect of any products purchased through unauthorized sales channel. Should Customers purchase or use Diodes Incorporated products for any unintended or unauthorized application, Customers shall indemnify and hold Diodes Incorporated and its representatives harmless against all claims, damages, expenses, and attorney fees arising out of, directly or indirectly, any claim of personal injury or death associated with such unintended or unauthorized application.

Products described herein may be covered by one or more United States, international or foreign patents pending. Product names and markings noted herein may also be covered by one or more United States, international or foreign trademarks.

This document is written in English but may be translated into multiple languages for reference. Only the English version of this document is the final and determinative format released by Diodes Incorporated.

LIFE SUPPORT

Diodes Incorporated products are specifically not authorized for use as critical components in life support devices or systems without the express written approval of the Chief Executive Officer of Diodes Incorporated. As used herein:

A. Life support devices or systems are devices or systems which:

1. are intended to implant into the body, or

2. support or sustain life and whose failure to perform when properly used in accordance with instructions for use provided in the labeling can be reasonably expected to result in significant injury to the user.

B. A critical component is any component in a life support device or system whose failure to perform can be reasonably expected to cause the failure of the life support device or to affect its safety or effectiveness.

Customers represent that they have all necessary expertise in the safety and regulatory ramifications of their life support devices or systems, and acknowledge and agree that they are solely responsible for all legal, regulatory and safety-related requirements concerning their products and any use of Diodes Incorporated products in such safety-critical, life support devices or systems, notwithstanding any devices- or systems-related information or support that may be provided by Diodes Incorporated. Further, Customers must fully indemnify Diodes Incorporated and its representatives against any damages arising out of the use of Diodes Incorporated products in such safety-critical, life support devices or systems.

Copyright © 2017, Diodes Incorporated

www.diodes.com

ENTEGRECİ

Bu belge www.entegreci.com üzerinden sunulmaktadır.

Elektronik komponent tedarikinde Entegreci

Entegreci, Eskişehir merkezli, Türkiye geneline satış yapan bir elektronik komponent mağazasıdır. Entegreler (IC), mikrodenetleyiciler, transistörler, diyotlar, pasif elemanlar, konnektörler, modüller ve geliştirme kartları tek adetten seri üretim adetlerine kadar satılır. Ürün sayfalarında güncel stok durumunu, fiyatı ve datasheet bağlantısını bulabilirsiniz.

Parça koduyla arama

Üretici parça numarasını yazın; stok ve fiyatı hemen görün.

www.entegreci.com

Ürün kategorileri

Entegreden kapasitöre tüm elektronik komponent kategorileri.

Kategorilere göz atın

Üreticiler

Aradığınız üreticinin ürünlerini tek sayfada inceleyin.

Üreticileri görün

Toplu alım ve teklif

Listede olmayan ya da yüksek adetli parçalar için teklif isteyin.

Teklif isteyin

www.entegreci.com | **destek@entegreci.com** | **0850 305 90 34**

Entegreci is an online electronic components store based in Türkiye. Search by manufacturer part number to see stock, prices and datasheets for integrated circuits, microcontrollers, transistors, passive components and connectors, or request a quote for parts that are not listed.

Bu sayfa Entegreci tarafından eklenmiştir. Belgenin önceki sayfaları asıl yayıncısına aittir ve içeriği değiştirilmemiştir; en güncel sürüm için belgenin yayıncısına başvurun.