National Semiconductor

May 1992

DM54LS373/DM74LS373, DM54LS374/DM74LS374 TRI-STATE® Octal D-Type Transparent Latches and Edge-Triggered Flip-Flops

DM54LS373/DM74LS373, DM54LS374/DM74LS374
TRI-STATE Octal D-Type Transparent Latches and Edge-Triggered Flip-Flops

General Description

These 8-bit registers feature totem-pole TRI-STATE outputs designed specifically for driving highly-capacitive or relatively low-impedance loads. The high-impedance state and increased high-logic level drive provide these registers with the capability of being connected directly to and driving the bus lines in a bus-organized system without need for interface or pull-up components. They are particularly attractive for implementing buffer registers, I/O ports, bidirectional bus drivers, and working registers. (Continued)

Features

- Choice of 8 latches or 8 D-type flip-flops in a single package
- TRI-STATE bus-driving outputs
- Full parallel-access for loading
- Buffered control inputs
- P-N-P inputs reduce D-C loading on data lines

Connection Diagrams

Dual-In-Line Packages

'LS373

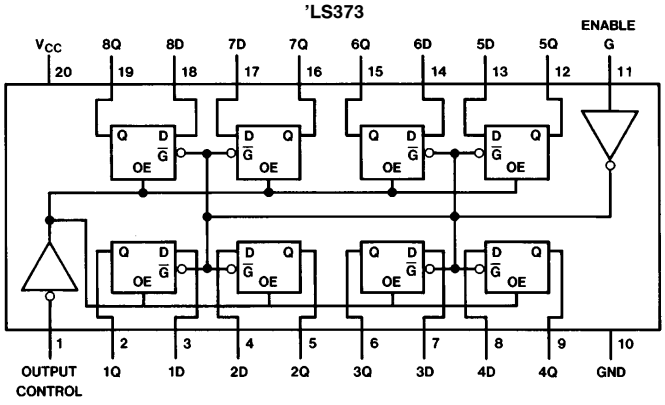

Order Number DM54LS373J, DM54LS373W, DM74LS373N or DM74LS373WM
See NS Package Number J20A, M20B, N20A or W20A

TL/F/6431–1

'LS374

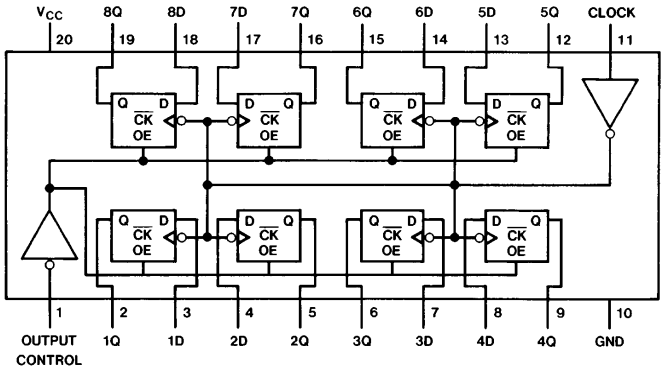

Order Number DM54LS374J, DM54LS374W, DM74LS374WM or DM74LS374N
See NS Package Number J20A, M20B, N20A or W20A

TL/F/6431–2

TRI-STATE® is a registered trademark of National Semiconductor Corp.

©1995 National Semiconductor Corporation

RRD-B30M105/Printed in U. S. A.

General Description (Continued)

The eight latches of the DM54/74LS373 are transparent D-type latches meaning that while the enable (G) is high the Q outputs will follow the data (D) inputs. When the enable is taken low the output will be latched at the level of the data that was set up.

The eight flip-flops of the DM54/74LS374 are edge-triggered D-type flip flops. On the positive transition of the clock, the Q outputs will be set to the logic states that were set up at the D inputs.

A buffered output control input can be used to place the eight outputs in either a normal logic state (high or low logic levels) or a high-impedance state. In the high-impedance state the outputs neither load nor drive the bus lines significantly.

The output control does not affect the internal operation of the latches or flip-flops. That is, the old data can be retained or new data can be entered even while the outputs are off.

Function Tables

DM54/74LS373

Output Control	Enable G	D	Output
L	H	H	H
L	H	L	L
L	L	X	Q_0
H	X	X	Z

DM54/74LS374

Output Control	Clock	D	Output
L	↑	H	H
L	↑	L	L
L	L	X	Q_0
H	X	X	Z

H = High Level (Steady State), L = Low Level (Steady State), X = Don't Care
↑ = Transition from low-to-high level, Z = High Impedance State
Q_0 = The level of the output before steady-state input conditions were established.

Logic Diagrams

DM54/74LS373
Transparent Latches

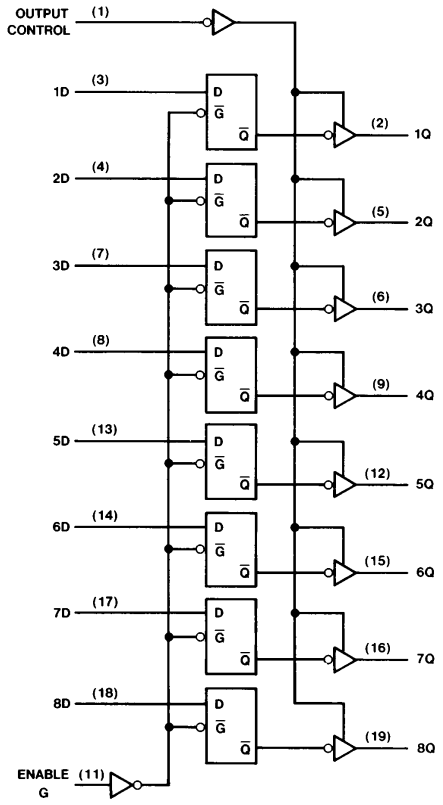

TL/F/6431–3

DM54/74LS374
Positive-Edge-Triggered Flip-Flops

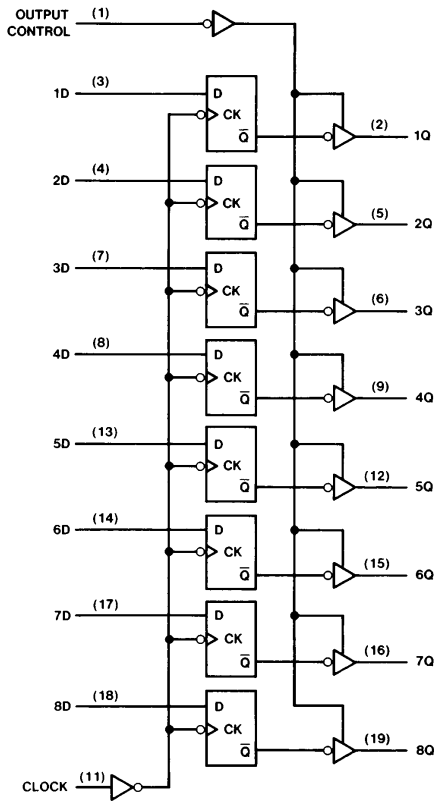

TL/F/6431–4

Absolute Maximum Ratings (See Note)

If Military/Aerospace specified devices are required, please contact the National Semiconductor Sales Office/Distributors for availability and specifications.

Supply Voltage	7V
Input Voltage	7V
Storage Temperature Range	−65°C to +150°C
Operating Free Air Temperature Range	
DM54LS	−55°C to +125°C
DM74LS	0°C to +70°C

Note: *The "Absolute Maximum Ratings" are those values beyond which the safety of the device cannot be guaranteed. The device should not be operated at these limits. The parametric values defined in the "Electrical Characteristics" table are not guaranteed at the absolute maximum ratings. The "Recommended Operating Conditions" table will define the conditions for actual device operation.*

Recommended Operating Conditions

Symbol	Parameter		DM54LS373			DM74LS373			Units
			Min	Nom	Max	Min	Nom	Max	
V_{CC}	Supply Voltage		4.5	5	5.5	4.75	5	5.25	V
V_{IH}	High Level Input Votage		2			2			V
V_{IL}	Low Level Input Voltage				0.7			0.8	V
I_{OH}	High Level Output Current				−1			−2.6	mA
I_{OL}	Low Level Output Current				12			24	mA
t_W	Pulse Width (Note 2)	Enable High	15			15			ns
		Enable Low	15			15			
t_{SU}	Data Setup Time (Notes 1 & 2)		5 ↓			5 ↓			ns
t_H	Data Hold Time (Notes 1 & 2)		20 ↓			20 ↓			ns
T_A	Free Air Operating Temperature		−55		125	0		70	°C

Note 1: The symbol (↓) indicates the falling edge of the clock pulse is used for reference.

Note 2: $T_A = 25°C$ and $V_{CC} = 5V$.

'LS373 Electrical Characteristics

over recommended operating free air temperature range (unless otherwise noted)

Symbol	Parameter	Conditions		Min	Typ (Note 1)	Max	Units
V_I	Input Clamp Voltage	V_{CC} = Min, I_I = −18 mA				−1.5	V
V_{OH}	High Level Output Voltage	V_{CC} = Min, I_{OH} = Max, V_{IL} = Max, V_{IH} = Min	DM54	2.4	3.4		V
			DM74	2.4	3.1		
V_{OL}	Low Level Output Voltage	V_{CC} = Min, I_{OL} = Max, V_{IL} = Max, V_{IH} = Min	DM54		0.25	0.4	V
			DM74		0.35	0.5	
		I_{OL} = 12 mA, V_{CC} = Min	DM74			0.4	
I_I	Input Current @ Max Input Voltage	V_{CC} = Max, V_I = 7V				0.1	mA
I_{IH}	High Level Input Current	V_{CC} = Max, V_I = 2.7V				20	μA
I_{IL}	Low Level Input Current	V_{CC} = Max, V_I = 0.4V				−0.4	mA
I_{OZH}	Off-State Output Current with High Level Output Voltage Applied	V_{CC} = Max, V_O = 2.7V, V_{IH} = Min, V_{IL} = Max				20	μA
I_{OZL}	Off-State Output Current with Low Level Output Voltage Applied	V_{CC} = Max, V_O = 0.4V, V_{IH} = Min, V_{IL} = Max				−20	μA
I_{OS}	Short Circuit Output Current	V_{CC} = Max (Note 2)	DM54	−20		−100	mA
			DM74	−50		−225	
I_{CC}	Supply Current	V_{CC} = Max, OC = 4.5V, D_n, Enable = GND			24	40	mA

'LS373 Switching Characteristics at $V_{CC} = 5V$ and $T_A = 25°C$

(See Section 1 for Test Waveforms and Output Load)

Symbol	Parameter	From (Input) To (Output)	$R_L = 667\Omega$				Units
			$C_L = 45$ pF		$C_L = 150$ pF		
			Min	Max	Min	Max	
t_{PLH}	Propagation Delay Time Low to High Level Output	Data to Q		18		26	ns
t_{PHL}	Propagation Delay Time High to Low Level Output	Data to Q		18		27	ns
t_{PLH}	Propagation Delay Time Low to High Level Output	Enable to Q		30		38	ns
t_{PHL}	Propagation Delay Time High to Low Level Output	Enable to Q		30		36	ns
t_{PZH}	Output Enable Time to High Level Output	Output Control to Any Q		28		36	ns
t_{PZL}	Output Enable Time to Low Level Output	Output Control to Any Q		36		50	ns
t_{PHZ}	Output Disable Time from High Level Output (Note 3)	Output Control to Any Q		20			ns
t_{PLZ}	Output Disable Time from Low Level Output (Note 3)	Output Control to Any Q		25			ns

Note 1: All typicals are at $V_{CC} = 5V$, $T_A = 25°C$.

Note 2: Not more than one output should be shorted at a time, and the duration should not exceed one second.

Note 3: $C_L = 5$ pF.

Recommended Operating Conditions

Symbol	Parameter		DM54LS374			DM74LS374			Units
			Min	Nom	Max	Min	Nom	Max	
V_{CC}	Supply Voltage		4.5	5	5.5	4.75	5	5.25	V
V_{IH}	High Level Input Voltage		2			2			V
V_{IL}	Low Level Input Voltage				0.7			0.8	V
I_{OH}	High Level Output Current				−1			−2.6	mA
I_{OL}	Low Level Output Current				12			24	mA
t_W	Pulse Width (Note 4)	Clock High	15			15			ns
		Clock Low	15			15			
t_{SU}	Data Setup Time (Notes 1 & 4)		20 ↑			20 ↑			ns
t_H	Data Hold Time (Notes 1 & 4)		1 ↑			1 ↑			ns
T_A	Free Air Operating Temperature		−55		125	0		70	°C

Note 1: The symbol (↑) indicates the rising edge of the clock pulse is used for reference.

Note 4: $T_A = 25°C$ and $V_{CC} = 5V$.

'LS374 Electrical Characteristics

over recommended operating free air temperature range (unless otherwise noted)

Symbol	Parameter	Conditions		Min	Typ (Note 1)	Max	Units
V_I	Input Clamp Voltage	V_{CC} = Min, I_I = −18 mA				−1.5	V
V_{OH}	High Level Output Voltage	V_{CC} = Min, I_{OH} = Max, V_{IL} = Max, V_{IH} = Min	DM54	2.4	3.4		V
			DM74	2.4	3.1		
V_{OL}	Low Level Output Voltage	V_{CC} = Min, I_{OL} = Max, V_{IL} = Max, V_{IH} = Min	DM54		0.25	0.4	V
			DM74		0.35	0.5	
		I_{OL} = 12 mA, V_{CC} = Min	DM74		0.25	0.4	
I_I	Input Current @ Max Input Voltage	V_{CC} = Max, V_I = 7V				0.1	mA
I_{IH}	High Level Input Current	V_{CC} = Max, V_I = 2.7V				20	μA
I_{IL}	Low Level Input Current	V_{CC} = Max, V_I = 0.4V				−0.4	mA
I_{OZH}	Off-State Output Current with High Level Output Voltage Applied	V_{CC} = Max, V_O = 2.7V, V_{IH} = Min, V_{IL} = Max				20	μA
I_{OZL}	Off-State Output Current with Low Level Output Voltage Applied	V_{CC} = Max, V_O = 0.4V, V_{IH} = Min, V_{IL} = Max				−20	μA
I_{OS}	Short Circuit Output Current	V_{CC} = Max (Note 2)	DM54	−50		−225	mA
			DM74	−50		−225	
I_{CC}	Supply Current	V_{CC} = Max, D_n = GND, OC = 4.5V			27	45	mA

'LS374 Switching Characteristics at V_{CC} = 5V and T_A = 25°C

(See Section 1 for Test Waveforms and Output Load)

Symbol	Parameter	R_L = 667Ω				Units
		C_L = 45 pF		C_L = 150 pF		
		Min	Max	Min	Max	
f_{MAX}	Maximum Clock Frequency	35		20		MHz
t_{PLH}	Propagation Delay Time Low to High Level Output		28		32	ns
t_{PHL}	Propagation Delay Time High to Low Level Output		28		38	ns
t_{PZH}	Output Enable Time to High Level Output		28		44	ns
t_{PZL}	Output Enable Time to Low Level Output		28		44	ns
t_{PHZ}	Output Disable Time from High Level Output (Note 3)		20			ns
t_{PLZ}	Output Disable Time from Low Level Output (Note 3)		25			ns

Note 1: All typicals are at V_{CC} = 5V, T_A = 25°C.

Note 2: Not more than one output should be shorted at a time, and the duration should not exceed one second.

Note 3: C_L = 5 pF.

Physical Dimensions inches (millimeters)

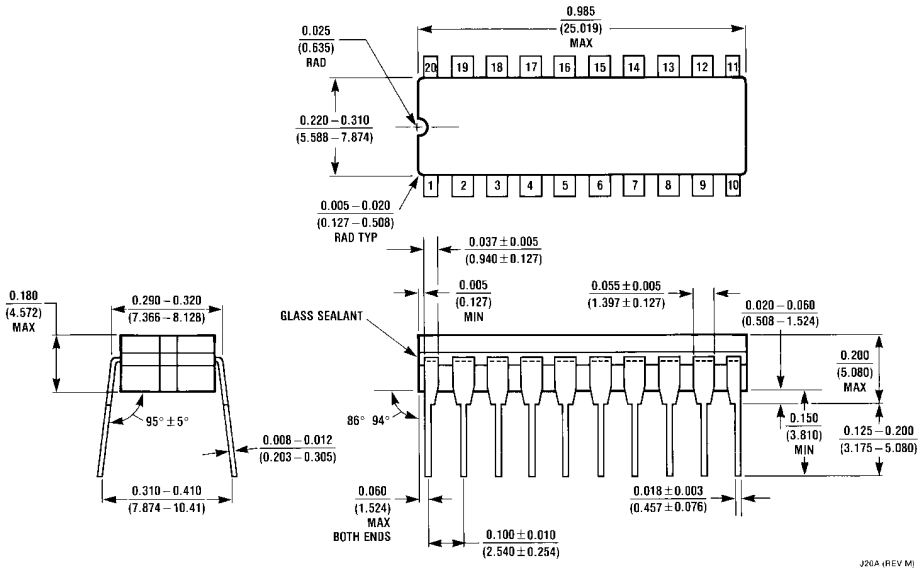

20-Lead Ceramic Dual-In-Line Package (J)
Order Number DM54LS373J or DM54LS374J
NS Package Number J20A

Physical Dimensions inches (millimeters) (Continued)

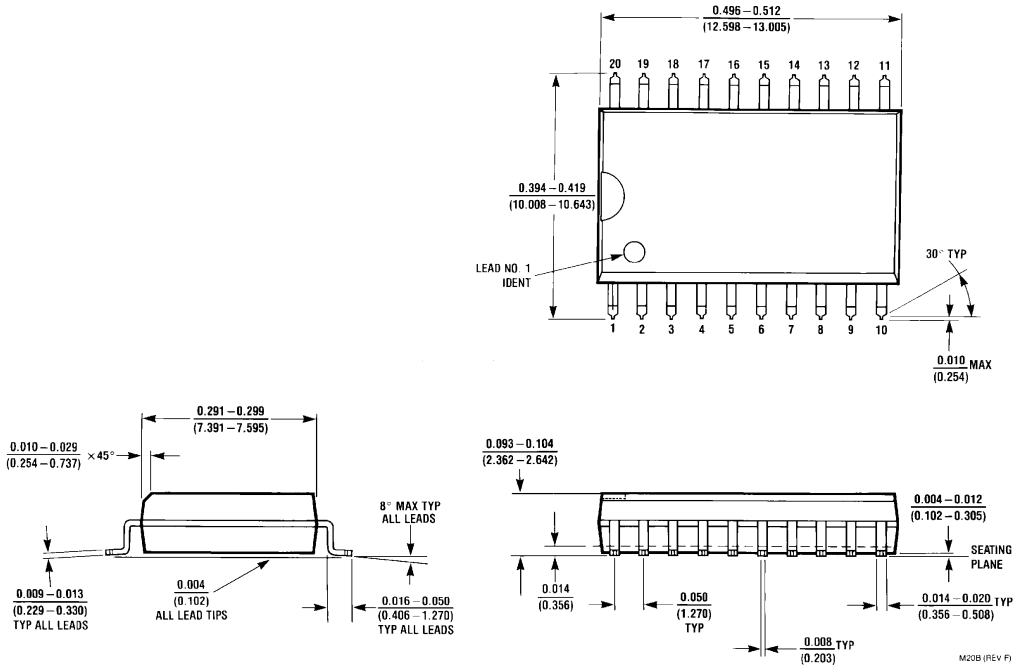

20-Lead Wide Small Outline Molded Package (M)
Order Number DM74LS373WM or DM74LS374WM
NS Package Number M20B

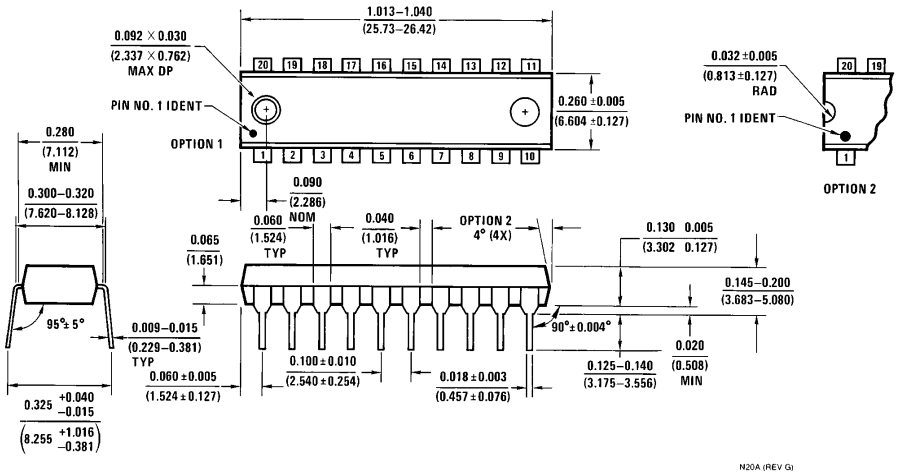

20-Lead Molded Dual-In-Line Package (N)
Order Number DM74LS373N and DM74LS374N
NS Package Number N20A

Physical Dimensions inches (millimeters) (Continued)

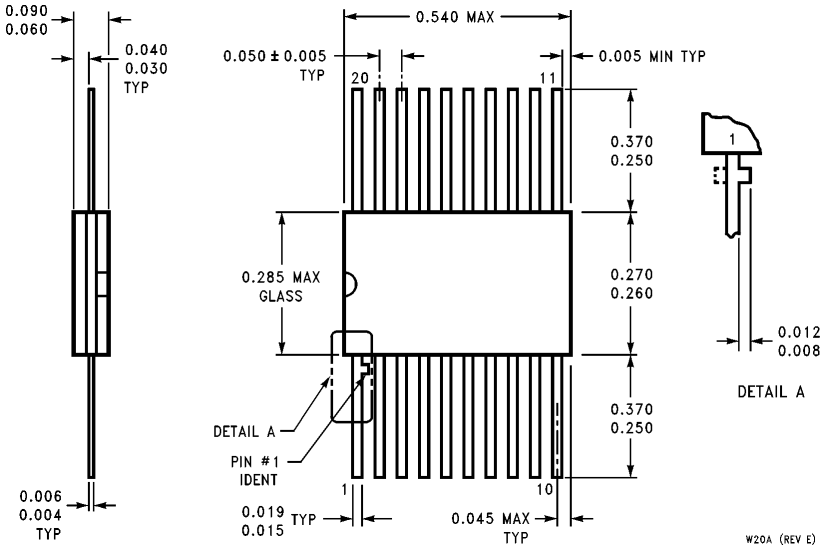

20-Lead Ceramic Flat Package (W)
Order Number DM54LS373W or DM54LS374W
NS Package Number W20A

LIFE SUPPORT POLICY

NATIONAL'S PRODUCTS ARE NOT AUTHORIZED FOR USE AS CRITICAL COMPONENTS IN LIFE SUPPORT DEVICES OR SYSTEMS WITHOUT THE EXPRESS WRITTEN APPROVAL OF THE PRESIDENT OF NATIONAL SEMICONDUCTOR CORPORATION. As used herein:

1. Life support devices or systems are devices or systems which, (a) are intended for surgical implant into the body, or (b) support or sustain life, and whose failure to perform, when properly used in accordance with instructions for use provided in the labeling, can be reasonably expected to result in a significant injury to the user.
2. A critical component is any component of a life support device or system whose failure to perform can be reasonably expected to cause the failure of the life support device or system, or to affect its safety or effectiveness.

National Semiconductor Corporation
1111 West Bardin Road
Arlington, TX 76017
Tel: 1(800) 272-9959
Fax: 1(800) 737-7018

National Semiconductor Europe
Fax: (+49) 0-180-530 85 86
Email: cnjwge@tevm2.nsc.com
Deutsch Tel: (+49) 0-180-530 85 85
English Tel: (+49) 0-180-532 78 32
Français Tel: (+49) 0-180-532 93 58
Italiano Tel: (+49) 0-180-534 16 80

National Semiconductor Hong Kong Ltd.
13th Floor, Straight Block,
Ocean Centre, 5 Canton Rd.
Tsimshatsui, Kowloon
Hong Kong
Tel: (852) 2737-1600
Fax: (852) 2736-9960

National Semiconductor Japan Ltd.
Tel: 81-043-299-2309
Fax: 81-043-299-2408

National does not assume any responsibility for use of any circuitry described, no circuit patent licenses are implied and National reserves the right at any time without notice to change said circuitry and specifications.

ENTEGRECİ

Bu belge www.entegreci.com üzerinden sunulmaktadır.

Elektronik komponent tedarikinde Entegreci

Entegreci, Eskişehir merkezli, Türkiye geneline satış yapan bir elektronik komponent mağazasıdır. Entegreler (IC), mikrodenetleyiciler, transistörler, diyotlar, pasif elemanlar, konnektörler, modüller ve geliştirme kartları tek adetten seri üretim adetlerine kadar satılır. Ürün sayfalarında güncel stok durumunu, fiyatı ve datasheet bağlantısını bulabilirsiniz.

Parça koduyla arama

Üretici parça numarasını yazın; stok ve fiyatı hemen görün.

www.entegreci.com

Ürün kategorileri

Entegreden kapasitöre tüm elektronik komponent kategorileri.

Kategorilere göz atın

Üreticiler

Aradığınız üreticinin ürünlerini tek sayfada inceleyin.

Üreticileri görün

Toplu alım ve teklif

Listede olmayan ya da yüksek adetli parçalar için teklif isteyin.

Teklif isteyin

www.entegreci.com | **destek@entegreci.com** | **0850 305 90 34**

Entegreci is an online electronic components store based in Türkiye. Search by manufacturer part number to see stock, prices and datasheets for integrated circuits, microcontrollers, transistors, passive components and connectors, or request a quote for parts that are not listed.

Bu sayfa Entegreci tarafından eklenmiştir. Belgenin önceki sayfaları asıl yayıncısına aittir ve içeriği değiştirilmemiştir; en güncel sürüm için belgenin yayıncısına başvurun.