TOSHIBA Photocoupler GaAs Ired & Photo−Transistor

TLP733F,TLP734F

Office Machine

Switching Power Supply

Unit in mm

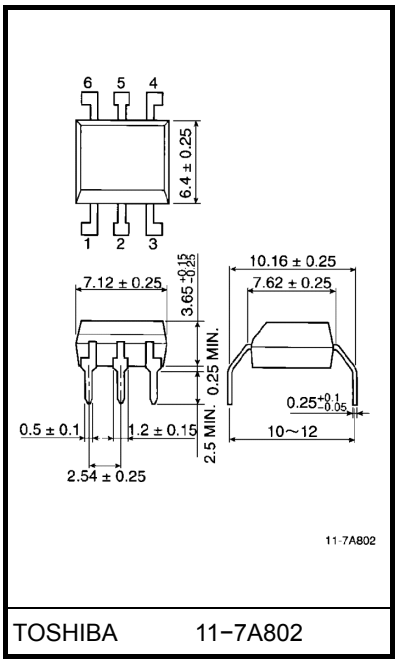

TOSHIBA 11−7A802

Weight: 0.42 g

The TOSHIBA TLP733F and TLP734F consists of a photo−transistor optically coupled to a gallium arsenide infrared emitting diode in a six lead plastic DIP.
All parameters are tested to the specification of TLP733 and TLP734. (both condition and limits)

- Collector−emitter voltage: 55 V (min.)
- Current transfer ratio: 50% (min.)
  Rank GB: 100% (min.)
- UL recognized: UL1577, file no. E67349
- BSI approved: BS EN60065: 2002
  Certificate no. 7364
  BS EN60950-1: 2002
  Certificate no. 7365
- SEMCO approved:EN60065,EN60950-1,EN60335-1
  Certificate no.302586
- Isolation voltage: 4000 Vrms (min.)
- Option (D4) type
  VDE approved: DIN EN 60747-5-2,
  Certificate no. 40009373
  Maximum operating insulation voltage: 890, 1130 V_{PK}
  Highest permissible over voltage: 6000, 8000 V_{PK}

(Note) When a EN 60747-5-2 approved type is needed, please designate the " Option (D4) "

- Creepage distance: 8.0mm (min.)
  Clearance: 8.0mm (min.)
  Internal creepage path: 4.0mm (min.)
  Insulation thickness: 0.5mm (min.)
- Conforming safety standards:
  DIN 57 804. VDE0804 / 1.83
  DIN IEC65 / VDE0860 / 8.81
  DIN IEC380 / VDE0806 / 8.81
  DIN IEC435 / VDE0805 / draft nov. 84
  DIN IEC601T1 / VDE0750T1 / 5.82
  BS7002: 1989 (EN60950)

Pin Configurations (top view)

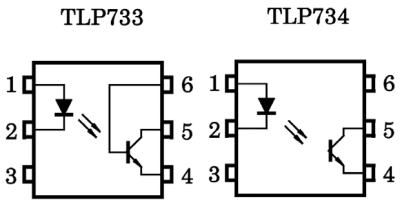

TLP733	TLP734
1 : ANODE	1 : ANODE
2 : CATHODE	2 : CATHODE
3 : NC	3 : NC
4 : EMITTER	4 : EMITTER
5 : COLLECTOR	5 : COLLECTOR
6 : BASE	6 : NC

RESTRICTIONS ON PRODUCT USE

20070701-EN

- The information contained herein is subject to change without notice.
- TOSHIBA is continually working to improve the quality and reliability of its products. Nevertheless, semiconductor devices in general can malfunction or fail due to their inherent electrical sensitivity and vulnerability to physical stress. It is the responsibility of the buyer, when utilizing TOSHIBA products, to comply with the standards of safety in making a safe design for the entire system, and to avoid situations in which a malfunction or failure of such TOSHIBA products could cause loss of human life, bodily injury or damage to property.
  In developing your designs, please ensure that TOSHIBA products are used within specified operating ranges as set forth in the most recent TOSHIBA products specifications. Also, please keep in mind the precautions and conditions set forth in the “Handling Guide for Semiconductor Devices,” or “TOSHIBA Semiconductor Reliability Handbook” etc.
- The TOSHIBA products listed in this document are intended for usage in general electronics applications (computer, personal equipment, office equipment, measuring equipment, industrial robotics, domestic appliances, etc.).These TOSHIBA products are neither intended nor warranted for usage in equipment that requires extraordinarily high quality and/or reliability or a malfunction or failure of which may cause loss of human life or bodily injury (“Unintended Usage”). Unintended Usage include atomic energy control instruments, airplane or spaceship instruments, transportation instruments, traffic signal instruments, combustion control instruments, medical instruments, all types of safety devices, etc.. Unintended Usage of TOSHIBA products listed in his document shall be made at the customer’s own risk.
- The products described in this document shall not be used or embedded to any downstream products of which manufacture, use and/or sale are prohibited under any applicable laws and regulations.
- The information contained herein is presented only as a guide for the applications of our products. No responsibility is assumed by TOSHIBA for any infringements of patents or other rights of the third parties which may result from its use. No license is granted by implication or otherwise under any patents or other rights of TOSHIBA or the third parties.
- GaAs(Gallium Arsenide) is used in this product. The dust or vapor is harmful to the human body. Do not break, cut, crush or dissolve chemically.
- Please contact your sales representative for product-by-product details in this document regarding RoHS compatibility. Please use these products in this document in compliance with all applicable laws and regulations that regulate the inclusion or use of controlled substances. Toshiba assumes no liability for damage or losses occurring as a result of noncompliance with applicable laws and regulations.

ENTEGRECİ

Bu belge www.entegreci.com üzerinden sunulmaktadır.

Elektronik komponent tedarikinde Entegreci

Entegreci, Eskişehir merkezli, Türkiye geneline satış yapan bir elektronik komponent mağazasıdır. Entegreler (IC), mikrodenetleyiciler, transistörler, diyotlar, pasif elemanlar, konnektörler, modüller ve geliştirme kartları tek adetten seri üretim adetlerine kadar satılır. Ürün sayfalarında güncel stok durumunu, fiyatı ve datasheet bağlantısını bulabilirsiniz.

Parça koduyla arama

Üretici parça numarasını yazın; stok ve fiyatı hemen görün.

www.entegreci.com

Ürün kategorileri

Entegreden kapasitöre tüm elektronik komponent kategorileri.

Kategorilere göz atın

Üreticiler

Aradığınız üreticinin ürünlerini tek sayfada inceleyin.

Üreticileri görün

Toplu alım ve teklif

Listede olmayan ya da yüksek adetli parçalar için teklif isteyin.

Teklif isteyin

www.entegreci.com | **destek@entegreci.com** | **0850 305 90 34**

Entegreci is an online electronic components store based in Türkiye. Search by manufacturer part number to see stock, prices and datasheets for integrated circuits, microcontrollers, transistors, passive components and connectors, or request a quote for parts that are not listed.

Bu sayfa Entegreci tarafından eklenmiştir. Belgenin önceki sayfaları asıl yayıncısına aittir ve içeriği değiştirilmemiştir; en güncel sürüm için belgenin yayıncısına başvurun.