HD74LS32

Quadruple 2-input Positive OR Gate

REJ03D0405–0200
Rev.2.00
Feb.18.2005

Features

- Ordering Information

Part Name	Package Type	Package Code (Previous Code)	Package Abbreviation	Taping Abbreviation (Quantity)
HD74LS32P	DILP-14 pin	PRDP0014AB-B (DP-14AV)	P	—
HD74LS32FPEL	SOP-14 pin (JEITA)	PRSP0014DF-B (FP-14DAV)	FP	EL (2,000 pcs/reel)

Note: Please consult the sales office for the above package availability.

Pin Arrangement

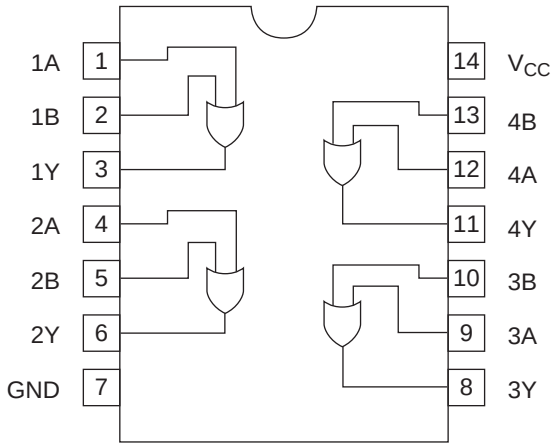

(Top view)

Circuit Schematic (1/4)

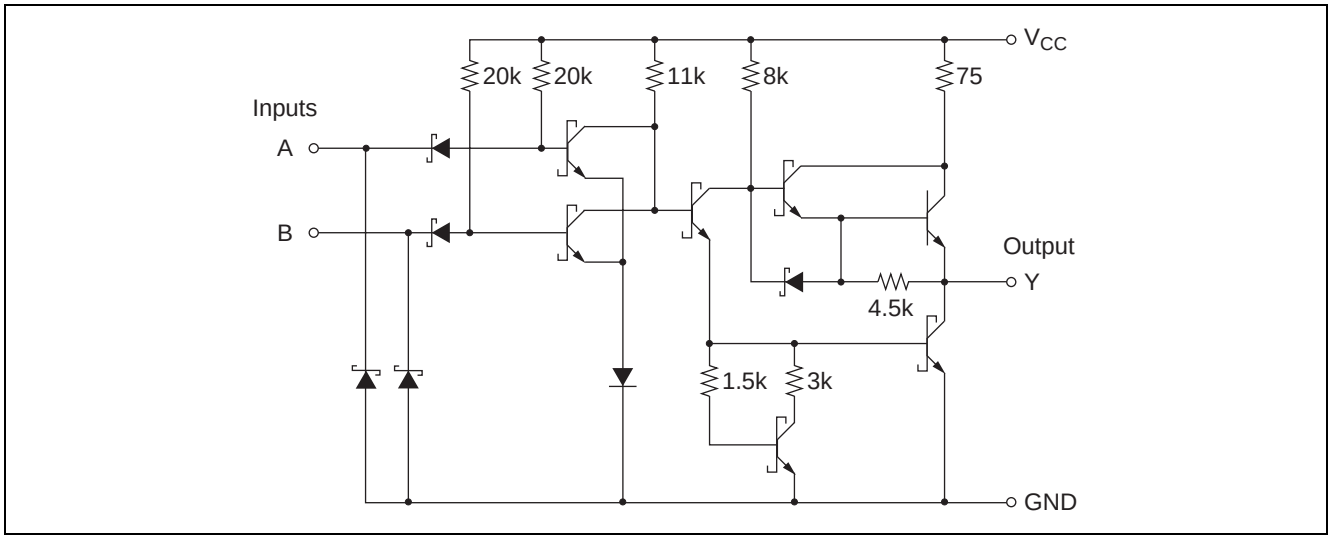

Absolute Maximum Ratings

Item	Symbol	Ratings	Unit
Supply voltage	V_{CC}	7	V
Input voltage	V_{IN}	7	V
Power dissipation	P_T	400	mW
Storage temperature	Tstg	–65 to +150	°C

Note: Voltage value, unless otherwise noted, are with respect to network ground terminal.

Recommended Operating Conditions

Item	Symbol	Min	Typ	Max	Unit
Supply voltage	V_{CC}	4.75	5.00	5.25	V
Output current	I_{OH}	—	—	–400	µA
	I_{OL}	—	—	8	mA
Operating temperature	Topr	–20	25	75	°C

Electrical Characteristics

(Ta = –20 to +75 °C)

Item	Symbol	min.	typ.*	max.	Unit	Condition
Input voltage	V_{IH}	2.0	—	—	V	
	V_{IL}	—	—	0.8	V	
Output voltage	V_{OH}	2.7	—	—	V	V_{CC} = 4.75 V, V_{IH} = 2 V, I_{OH} = –400 µA
	V_{OL}	—	—	0.5	V	I_{OL} = 8 mA, V_{CC} = 4.75 V, V_{IL} = 0.8 V
		—	—	0.4		I_{OL} = 4 mA, V_{CC} = 4.75 V, V_{IL} = 0.8 V
Input current	I_{IH}	—	—	20	µA	V_{CC} = 5.25 V, V_I = 2.7 V
	I_{IL}	—	—	–0.4	mA	V_{CC} = 5.25 V, V_I = 0.4 V
	I_I	—	—	0.1	mA	V_{CC} = 5.25 V, V_I = 7 V
Short-circuit output current	I_{OS}	–20	—	–100	mA	V_{CC} = 5.25 V
Supply current	I_{CCH}	—	3.1	6.2	mA	V_{CC} = 5.25 V
	I_{CCL}	—	4.9	9.8	mA	V_{CC} = 5.25 V
Input clamp voltage	V_{IK}	—	—	–1.5	V	V_{CC} = 4.75 V, I_{IN} = –18 mA

Note: * V_{CC} = 5 V, Ta = 25°C

Switching Characteristics

(V_{CC} = 5 V, Ta = 25°C)

Item	Symbol	min.	typ.	max.	Unit	Condition
Propagation delay time	t_{PLH}	—	14	22	ns	C_L = 15 pF, R_L = 2 kΩ
	t_{PHL}	—	14	22	ns	C_L = 15 pF, R_L = 2 kΩ

Note: Refer to Test Circuit and Waveform of the Common Item "TTL Common Matter (Document No.: REJ27D0005-0100)".

Package Dimensions

JEITA Package Code	RENESAS Code	Previous Code	MASS[Typ.]
P-DIP14-6.3x19.2-2.54	PRDP0014AB-B	DP-14AV	0.97g

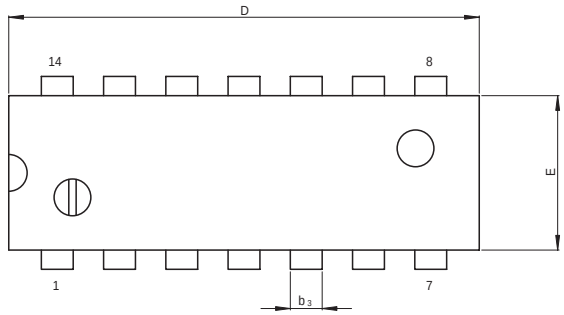

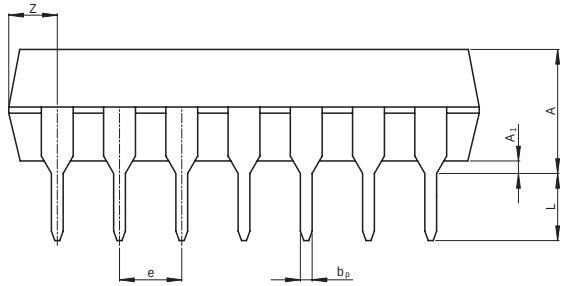

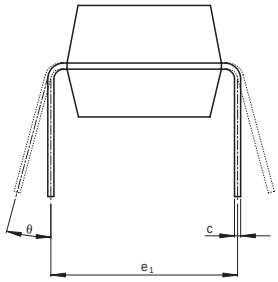

(Ni/Pd/Au plating)

Reference Symbol	Dimension in Millimeters		
	Min	Nom	Max
e_1	——	7.62	——
D	——	19.2	20.32
E	——	6.3	7.4
A	——	——	5.06
A_1	0.51	——	——
b_p	0.40	0.48	0.56
b_3	——	1.30	——
c	0.19	0.25	0.31
θ	0°	——	15°
e	2.29	2.54	2.79
Z	——	——	2.39
L	2.54	——	——

JEITA Package Code	RENESAS Code	Previous Code	MASS[Typ.]
P-SOP14-5.5x10.06-1.27	PRSP0014DF-B	FP-14DAV	0.23g

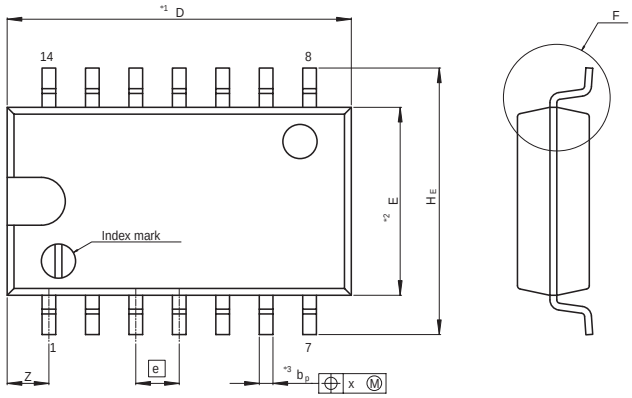

NOTE)
1. DIMENSIONS"*1 (Nom)"AND"*2" DO NOT INCLUDE MOLD FLASH.
2. DIMENSION"*3"DOES NOT INCLUDE TRIM OFFSET.

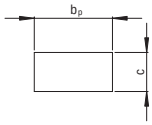

Terminal cross section
(Ni/Pd/Au plating)

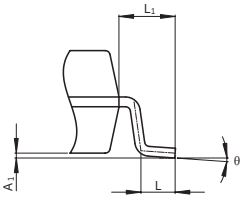

Detail F

Reference Symbol	Dimension in Millimeters		
	Min	Nom	Max
D	——	10.06	10.5
E	——	5.50	——
A_2	——	——	——
A_1	0.00	0.10	0.20
A	——	——	2.20
b_p	0.34	0.40	0.46
b_1	——	——	——
c	0.15	0.20	0.25
c_1	——	——	——
θ	0°	——	8°
H_E	7.50	7.80	8.00
e	——	1.27	——
x	——	——	0.12
y	——	——	0.15
Z	——	——	1.42
L	0.50	0.70	0.90
L_1	——	1.15	——

Renesas Technology Corp. Sales Strategic Planning Div. Nippon Bldg., 2-6-2, Ohte-machi, Chiyoda-ku, Tokyo 100-0004, Japan

Keep safety first in your circuit designs!
1. Renesas Technology Corp. puts the maximum effort into making semiconductor products better and more reliable, but there is always the possibility that trouble may occur with them. Trouble with semiconductors may lead to personal injury, fire or property damage.
Remember to give due consideration to safety when making your circuit designs, with appropriate measures such as (i) placement of substitutive, auxiliary circuits, (ii) use of nonflammable material or (iii) prevention against any malfunction or mishap.

Notes regarding these materials
1. These materials are intended as a reference to assist our customers in the selection of the Renesas Technology Corp. product best suited to the customer's application; they do not convey any license under any intellectual property rights, or any other rights, belonging to Renesas Technology Corp. or a third party.
2. Renesas Technology Corp. assumes no responsibility for any damage, or infringement of any third-party's rights, originating in the use of any product data, diagrams, charts, programs, algorithms, or circuit application examples contained in these materials.
3. All information contained in these materials, including product data, diagrams, charts, programs and algorithms represents information on products at the time of publication of these materials, and are subject to change by Renesas Technology Corp. without notice due to product improvements or other reasons. It is therefore recommended that customers contact Renesas Technology Corp. or an authorized Renesas Technology Corp. product distributor for the latest product information before purchasing a product listed herein.
The information described here may contain technical inaccuracies or typographical errors.
Renesas Technology Corp. assumes no responsibility for any damage, liability, or other loss rising from these inaccuracies or errors.
Please also pay attention to information published by Renesas Technology Corp. by various means, including the Renesas Technology Corp. Semiconductor home page (http://www.renesas.com).
4. When using any or all of the information contained in these materials, including product data, diagrams, charts, programs, and algorithms, please be sure to evaluate all information as a total system before making a final decision on the applicability of the information and products. Renesas Technology Corp. assumes no responsibility for any damage, liability or other loss resulting from the information contained herein.
5. Renesas Technology Corp. semiconductors are not designed or manufactured for use in a device or system that is used under circumstances in which human life is potentially at stake. Please contact Renesas Technology Corp. or an authorized Renesas Technology Corp. product distributor when considering the use of a product contained herein for any specific purposes, such as apparatus or systems for transportation, vehicular, medical, aerospace, nuclear, or undersea repeater use.
6. The prior written approval of Renesas Technology Corp. is necessary to reprint or reproduce in whole or in part these materials.
7. If these products or technologies are subject to the Japanese export control restrictions, they must be exported under a license from the Japanese government and cannot be imported into a country other than the approved destination.
Any diversion or reexport contrary to the export control laws and regulations of Japan and/or the country of destination is prohibited.
8. Please contact Renesas Technology Corp. for further details on these materials or the products contained therein.

RENESAS SALES OFFICES

http://www.renesas.com

Refer to "**http://www.renesas.com/en/network**" for the latest and detailed information.

Renesas Technology America, Inc.
450 Holger Way, San Jose, CA 95134-1368, U.S.A
Tel: <1> (408) 382-7500, Fax: <1> (408) 382-7501

Renesas Technology Europe Limited
Dukes Meadow, Millboard Road, Bourne End, Buckinghamshire, SL8 5FH, U.K.
Tel: <44> (1628) 585-100, Fax: <44> (1628) 585-900

Renesas Technology Hong Kong Ltd.
7th Floor, North Tower, World Finance Centre, Harbour City, 1 Canton Road, Tsimshatsui, Kowloon, Hong Kong
Tel: <852> 2265-6688, Fax: <852> 2730-6071

Renesas Technology Taiwan Co., Ltd.
10th Floor, No.99, Fushing North Road, Taipei, Taiwan
Tel: <886> (2) 2715-2888, Fax: <886> (2) 2713-2999

Renesas Technology (Shanghai) Co., Ltd.
Unit2607 Ruijing Building, No.205 Maoming Road (S), Shanghai 200020, China
Tel: <86> (21) 6472-1001, Fax: <86> (21) 6415-2952

Renesas Technology Singapore Pte. Ltd.
1 Harbour Front Avenue, #06-10, Keppel Bay Tower, Singapore 098632
Tel: <65> 6213-0200, Fax: <65> 6278-8001

© 2005. Renesas Technology Corp., All rights reserved. Printed in Japan.

Colophon .2.0

ENTEGRECİ

Bu belge www.entegreci.com üzerinden sunulmaktadır.

Elektronik komponent tedarikinde Entegreci

Entegreci, Eskişehir merkezli, Türkiye geneline satış yapan bir elektronik komponent mağazasıdır. Entegreler (IC), mikrodenetleyiciler, transistörler, diyotlar, pasif elemanlar, konnektörler, modüller ve geliştirme kartları tek adetten seri üretim adetlerine kadar satılır. Ürün sayfalarında güncel stok durumunu, fiyatı ve datasheet bağlantısını bulabilirsiniz.

Parça koduyla arama

Üretici parça numarasını yazın; stok ve fiyatı hemen görün.

www.entegreci.com

Ürün kategorileri

Entegreden kapasitöre tüm elektronik komponent kategorileri.

Kategorilere göz atın

Üreticiler

Aradığınız üreticinin ürünlerini tek sayfada inceleyin.

Üreticileri görün

Toplu alım ve teklif

Listede olmayan ya da yüksek adetli parçalar için teklif isteyin.

Teklif isteyin

www.entegreci.com | **destek@entegreci.com** | **0850 305 90 34**

Entegreci is an online electronic components store based in Türkiye. Search by manufacturer part number to see stock, prices and datasheets for integrated circuits, microcontrollers, transistors, passive components and connectors, or request a quote for parts that are not listed.

Bu sayfa Entegreci tarafından eklenmiştir. Belgenin önceki sayfaları asıl yayıncısına aittir ve içeriği değiştirilmemiştir; en güncel sürüm için belgenin yayıncısına başvurun.