HD74HC00

Quad. 2-input NAND Gates

HITACHI

Features

- High Speed Operation: t_{pd} = 8.5 ns typ (C_L = 50 pF)
- High Output Current: Fanout of 10 LSTTL Loads
- Wide Operating Voltage: V_{CC} = 2 to 6 V
- Low Input Current: 1 µA max
- Low Quiescent Supply Current: I_{CC} (static) = 1 µA max (Ta = 25°C)

Pin Arrangement

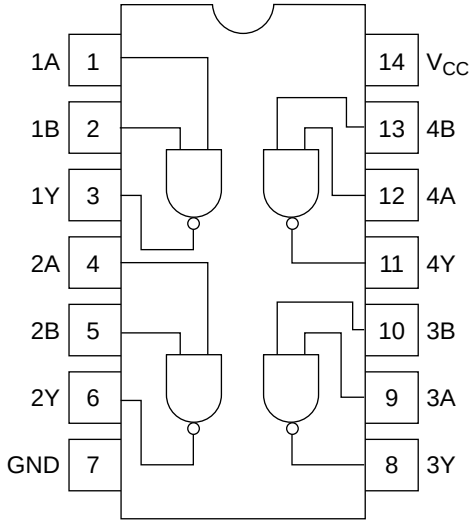

(Top view)

Hitachi semiconductor

Circuit Schematic (1/4)

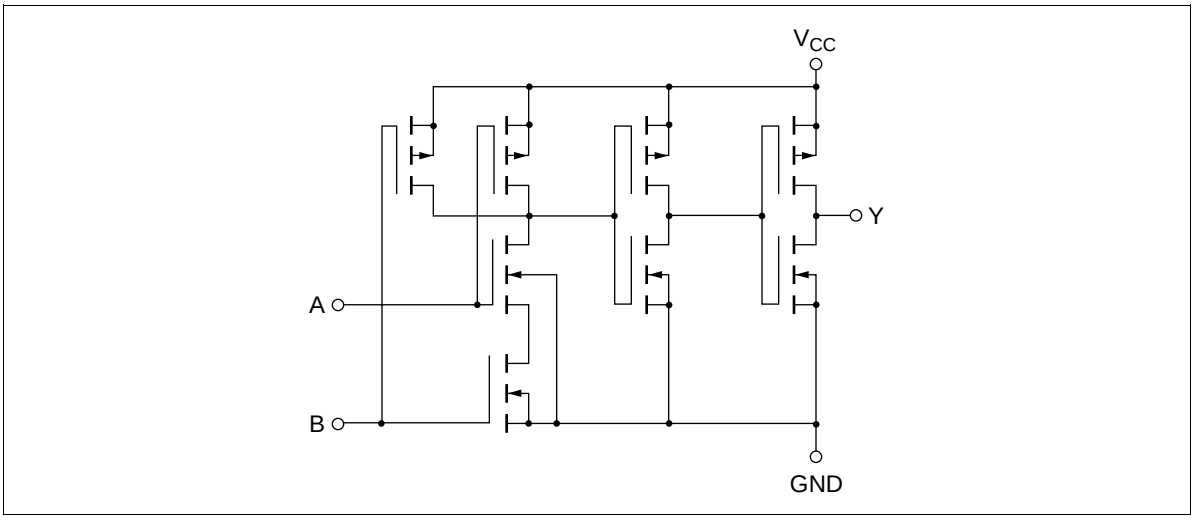

DC Characteristics

			Ta = 25°C			Ta = –40 to +85°C			
Item	**Symbol**	**V_{cc} (V)**	**Min**	**Typ**	**Max**	**Min**	**Max**	**Unit**	**Test Conditions**
Input voltage	V_{IH}	2.0	1.5	—	—	1.5	—	V	
		4.5	3.15	—	—	3.15	—		
		6.0	4.2	—	—	4.2	—		
	V_{IL}	2.0	—	—	0.5	—	0.5	V	
		4.5	—	—	1.35	—	1.35		
		6.0	—	—	1.8	—	1.8		
Output voltage	V_{OH}	2.0	1.9	2.0	—	1.9	—	V	Vin = V_{IH} or V_{IL} I_{OH} = –20 µA
		4.5	4.4	4.5	—	4.4	—		
		6.0	5.9	6.0	—	5.9	—		
		4.5	4.18	—	—	4.13	—		I_{OH} = –4 mA
		6.0	5.68	—	—	5.63	—		I_{OH} = –5.2 mA
	V_{OL}	2.0	—	0.0	0.1	—	0.1	V	Vin = V_{IH} or V_{IL} I_{OL} = 20 µA
		4.5	—	0.0	0.1	—	0.1		
		6.0	—	0.0	0.1	—	0.1		
		4.5	—	—	0.26	—	0.33		I_{OL} = 4 mA
		6.0	—	—	0.26	—	0.33		I_{OL} = 5.2 mA

DC Characteristics (cont)

Item	Symbol	V_{cc} (V)	Ta = 25°C Min	Typ	Max	Ta = –40 to +85°C Min	Max	Unit	Test Conditions
Input current	Iin	6.0	—	—	±0.1	—	±1.0	µA	Vin = V_{CC} or GND
Quiescent supply current	I_{CC}	6.0	—	—	1.0	—	10	µA	Vin = V_{CC} or GND, Iout = 0 µA

AC Characteristics (C_L = 50 pF, Input t_r = t_f = 6 ns)

Item	Symbol	V_{cc} (V)	Ta = 25°C Min	Typ	Max	Ta = –40 to +85°C Min	Max	Unit	Test Conditions
Propagation delay time	t_{PLH}	2.0	—	—	90	—	115	ns	
		4.5	—	9	18	—	23		
		6.0	—	—	15	—	20		
	t_{PHL}	2.0	—	—	90	—	115	ns	
		4.5	—	8	18	—	23		
		6.0	—	—	15	—	20		
Output rise time	t_{TLH}	2.0	—	—	75	—	95	ns	
		4.5	—	7	15	—	19		
		6.0	—	—	13	—	16		
Output fall time	t_{THL}	2.0	—	—	75	—	95	ns	
		4.5	—	7	15	—	19		
		6.0	—	—	13	—	16		
Input capacitance	Cin	—	—	5	10	—	10	pF	

Unit: mm

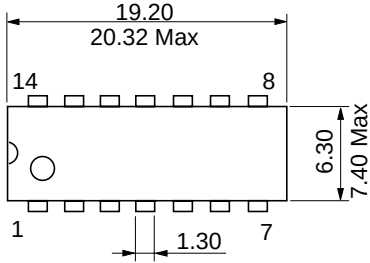

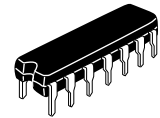

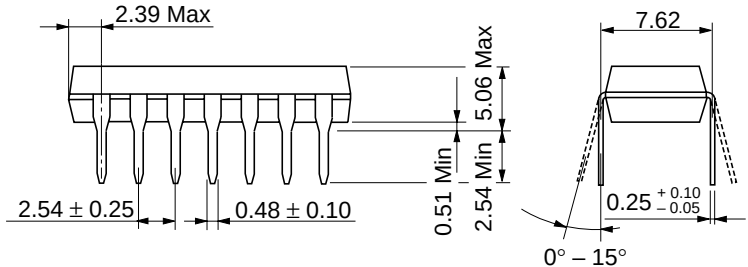

Hitachi Code	DP-14
JEDEC	Conforms
EIAJ	Conforms
Weight (reference value)	0.97 g

Unit: mm

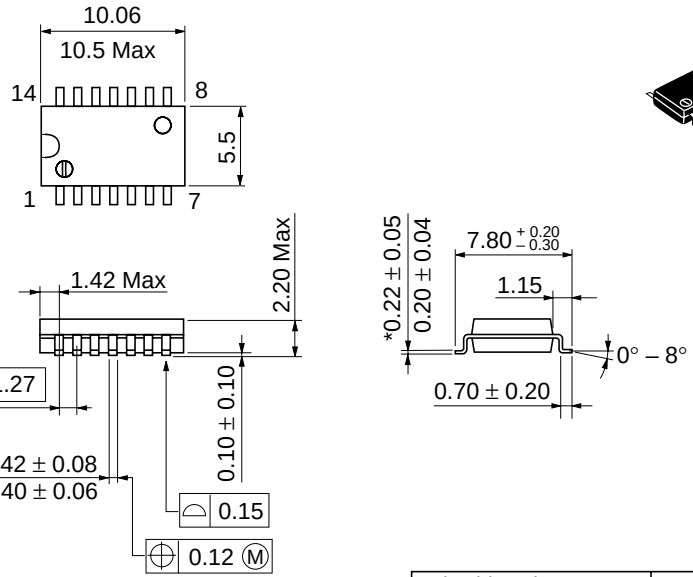

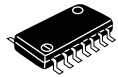

Hitachi Code	FP-14DA
JEDEC	—
EIAJ	Conforms
Weight (reference value)	0.23 g

*Dimension including the plating thickness
Base material dimension

Unit: mm

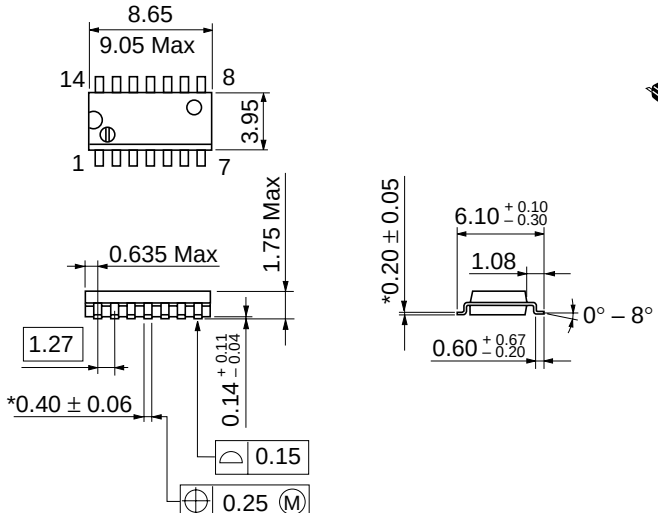

Hitachi Code	FP-14DN
JEDEC	Conforms
EIAJ	Conforms
Weight (reference value)	0.13 g

*Pd plating

Unit: mm

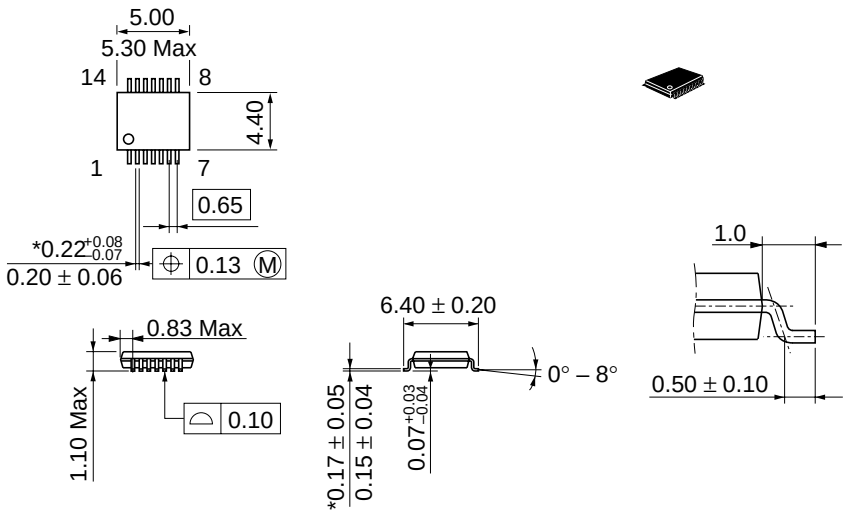

Hitachi Code	TTP-14D
JEDEC	—
EIAJ	—
Weight (reference value)	0.05 g

*Dimension including the plating thickness
Base material dimension

Cautions

1. Hitachi neither warrants nor grants licenses of any rights of Hitachi's or any third party's patent, copyright, trademark, or other intellectual property rights for information contained in this document. Hitachi bears no responsibility for problems that may arise with third party's rights, including intellectual property rights, in connection with use of the information contained in this document.
2. Products and product specifications may be subject to change without notice. Confirm that you have received the latest product standards or specifications before final design, purchase or use.
3. Hitachi makes every attempt to ensure that its products are of high quality and reliability. However, contact Hitachi's sales office before using the product in an application that demands especially high quality and reliability or where its failure or malfunction may directly threaten human life or cause risk of bodily injury, such as aerospace, aeronautics, nuclear power, combustion control, transportation, traffic, safety equipment or medical equipment for life support.
4. Design your application so that the product is used within the ranges guaranteed by Hitachi particularly for maximum rating, operating supply voltage range, heat radiation characteristics, installation conditions and other characteristics. Hitachi bears no responsibility for failure or damage when used beyond the guaranteed ranges. Even within the guaranteed ranges, consider normally foreseeable failure rates or failure modes in semiconductor devices and employ systemic measures such as fail-safes, so that the equipment incorporating Hitachi product does not cause bodily injury, fire or other consequential damage due to operation of the Hitachi product.
5. This product is not designed to be radiation resistant.
6. No one is permitted to reproduce or duplicate, in any form, the whole or part of this document without written approval from Hitachi.
7. Contact Hitachi's sales office for any questions regarding this document or Hitachi semiconductor products.

HITACHI

Hitachi, Ltd.
Semiconductor & Integrated Circuits.
Nippon Bldg., 2-6-2, Ohte-machi, Chiyoda-ku, Tokyo 100-0004, Japan
Tel: Tokyo (03) 3270-2111 Fax: (03) 3270-5109

URL
NorthAmerica : http:semiconductor.hitachi.com/
Europe : http://www.hitachi-eu.com/hel/ecg
Asia (Singapore) : http://www.has.hitachi.com.sg/grp3/sicd/index.htm
Asia (Taiwan) : http://www.hitachi.com.tw/E/Product/SICD_Frame.htm
Asia (HongKong) : http://www.hitachi.com.hk/eng/bo/grp3/index.htm
Japan : http://www.hitachi.co.jp/Sicd/indx.htm

For further information write to:

Hitachi Semiconductor
(America) Inc.
179 East Tasman Drive,
San Jose,CA 95134
Tel: <1> (408) 433-1990
Fax: <1>(408) 433-0223

Hitachi Europe GmbH
Electronic components Group
Dornacher Straße 3
D-85622 Feldkirchen, Munich
Germany
Tel: <49> (89) 9 9180-0
Fax: <49> (89) 9 29 30 00

Hitachi Europe Ltd.
Electronic Components Group.
Whitebrook Park
Lower Cookham Road
Maidenhead
Berkshire SL6 8YA, United Kingdom
Tel: <44> (1628) 585000
Fax: <44> (1628) 778322

Hitachi Asia Pte. Ltd.
16 Collyer Quay #20-00
Hitachi Tower
Singapore 049318
Tel: 535-2100
Fax: 535-1533

Hitachi Asia Ltd.
Taipei Branch Office
3F, Hung Kuo Building. No.167,
Tun-Hwa North Road, Taipei (105)
Tel: <886> (2) 2718-3666
Fax: <886> (2) 2718-8180

Hitachi Asia (Hong Kong) Ltd.
Group III (Electronic Components)
7/F., North Tower, World Finance Centre,
Harbour City, Canton Road, Tsim Sha Tsui,
Kowloon, Hong Kong
Tel: <852> (2) 735 9218
Fax: <852> (2) 730 0281
Telex: 40815 HITEC HX

Copyright ' Hitachi, Ltd., 1999. All rights reserved. Printed in Japan.

ENTEGRECİ

Bu belge www.entegreci.com üzerinden sunulmaktadır.

Elektronik komponent tedarikinde Entegreci

Entegreci, Eskişehir merkezli, Türkiye geneline satış yapan bir elektronik komponent mağazasıdır. Entegreler (IC), mikrodenetleyiciler, transistörler, diyotlar, pasif elemanlar, konnektörler, modüller ve geliştirme kartları tek adetten seri üretim adetlerine kadar satılır. Ürün sayfalarında güncel stok durumunu, fiyatı ve datasheet bağlantısını bulabilirsiniz.

Parça koduyla arama

Üretici parça numarasını yazın; stok ve fiyatı hemen görün.

www.entegreci.com

Ürün kategorileri

Entegreden kapasitöre tüm elektronik komponent kategorileri.

Kategorilere göz atın

Üreticiler

Aradığınız üreticinin ürünlerini tek sayfada inceleyin.

Üreticileri görün

Toplu alım ve teklif

Listede olmayan ya da yüksek adetli parçalar için teklif isteyin.

Teklif isteyin

www.entegreci.com | **destek@entegreci.com** | **0850 305 90 34**

Entegreci is an online electronic components store based in Türkiye. Search by manufacturer part number to see stock, prices and datasheets for integrated circuits, microcontrollers, transistors, passive components and connectors, or request a quote for parts that are not listed.

Bu sayfa Entegreci tarafından eklenmiştir. Belgenin önceki sayfaları asıl yayıncısına aittir ve içeriği değiştirilmemiştir; en güncel sürüm için belgenin yayıncısına başvurun.