MOTOROLA

SN54/74LS273

OCTAL D FLIP-FLOP WITH CLEAR

The SN54/74LS273 is a high-speed 8-Bit Register. The register consists of eight D-Type Flip-Flops with a Common Clock and an asynchronous active LOW Master Reset. This device is supplied in a 20-pin package featuring 0.3 inch lead spacing.

- 8-Bit High Speed Register
- Parallel Register
- Common Clock and Master Reset
- Input Clamp Diodes Limit High-Speed Termination Effects

OCTAL D FLIP-FLOP WITH CLEAR

LOW POWER SCHOTTKY

CONNECTION DIAGRAM DIP (TOP VIEW)

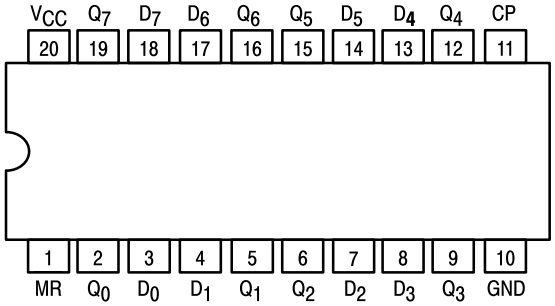

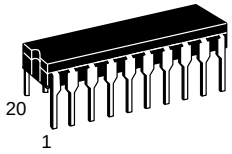

J SUFFIX
CERAMIC
CASE 732-03

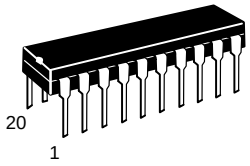

N SUFFIX
PLASTIC
CASE 738-03

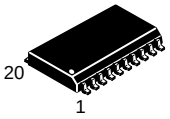

DW SUFFIX
SOIC
CASE 751D-03

PIN NAMES

		LOADING (Note a) HIGH	LOW
CP	Clock (Active HIGH Going Edge) Input	0.5 U.L.	0.25 U.L.
$\overline{D_0}$–D_7	Data Inputs	0.5 U.L.	0.25 U.L.
MR	Master Reset (Active LOW) Input	0.5 U.L.	0.25 U.L.
Q_0–Q_7	Register Outputs (Note b)	10 U.L.	5 (2.5) U.L.

NOTES:
a) 1 TTL Unit Load (U.L.) = 40 µA HIGH/1.6 mA LOW.
b) The Output LOW drive factor is 2.5 U.L. for Military (54) and 5 U.L. for Commercial (74) Temperature Ranges.

ORDERING INFORMATION

SN54LSXXXJ	Ceramic
SN74LSXXXN	Plastic
SN74LSXXXDW	SOIC

TRUTH TABLE

$\overline{MR}$	CP	D_X	Q_X
L	X	X	L
H	↑	H	H
H	↑	L	L

H = HIGH Logic Level
L = LOW Logic Level
X = Immaterial

LOGIC DIAGRAM

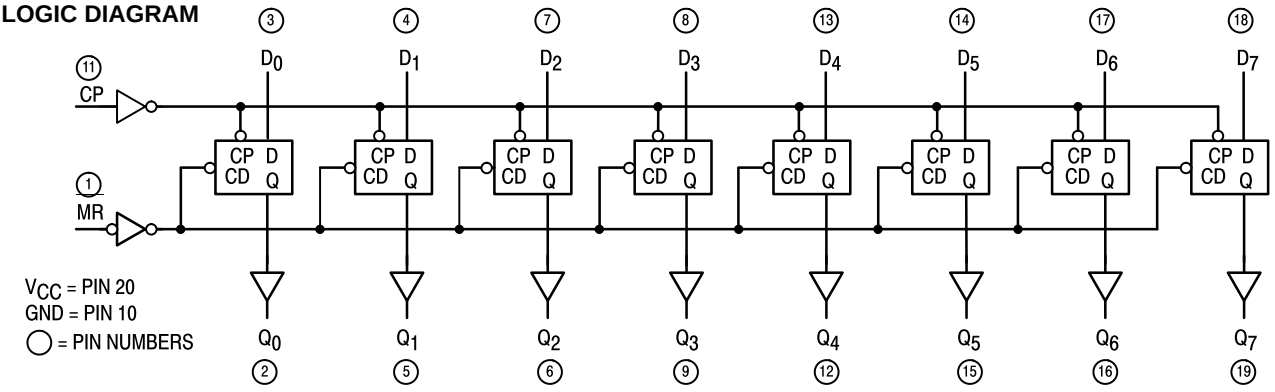

FUNCTIONAL DESCRIPTION

The SN54/74LS273 is an 8-Bit Parallel Register with a common Clock and common Master Reset.

When the MR input is LOW, the Q outputs are LOW, independent of the other inputs. Information meeting the setup and hold time requirements of the D inputs is transferred to the Q outputs on the LOW-to-HIGH transition of the clock input.

GUARANTEED OPERATING RANGES

Symbol	Parameter		Min	Typ	Max	Unit
V_{CC}	Supply Voltage	54 74	4.5 4.75	5.0 5.0	5.5 5.25	V
T_A	Operating Ambient Temperature Range	54 74	−55 0	25 25	125 70	°C
I_{OH}	Output Current — High	54, 74			−0.4	mA
I_{OL}	Output Current — Low	54 74			4.0 8.0	mA

DC CHARACTERISTICS OVER OPERATING TEMPERATURE RANGE (unless otherwise specified)

Symbol	Parameter		Limits Min	Limits Typ	Limits Max	Unit	Test Conditions	
V_{IH}	Input HIGH Voltage		2.0			V	Guaranteed Input HIGH Voltage for All Inputs	
V_{IL}	Input LOW Voltage	54			0.7	V	Guaranteed Input LOW Voltage for All Inputs	
		74			0.8			
V_{IK}	Input Clamp Diode Voltage			−0.65	−1.5	V	V_{CC} = MIN, I_{IN} = −18 mA	
V_{OH}	Output HIGH Voltage	54	2.5	3.5		V	V_{CC} = MIN, I_{OH} = MAX, V_{IN} = V_{IH} or V_{IL} per Truth Table	
		74	2.7	3.5		V		
V_{OL}	Output LOW Voltage	54, 74		0.25	0.4	V	I_{OL} = 4.0 mA	V_{CC} = V_{CC} MIN, V_{IN} = V_{IL} or V_{IH} per Truth Table
		74		0.35	0.5	V	I_{OL} = 8.0 mA	
I_{IH}	Input HIGH Current				20	μA	V_{CC} = MAX, V_{IN} = 2.7 V	
					0.1	mA	V_{CC} = MAX, V_{IN} = 7.0 V	
I_{IL}	Input LOW Current				−0.4	mA	V_{CC} = MAX, V_{IN} = 0.4 V	
I_{OS}	Short Circuit Current (Note 1)		−20		−100	mA	V_{CC} = MAX	
I_{CC}	Power Supply Current				27	mA	V_{CC} = MAX	

Note 1: Not more than one output should be shorted at a time, nor for more than 1 second.

AC CHARACTERISTICS (T_A = 25°C, V_{CC} = 5.0 V)

Symbol	Parameter	Limits Min	Limits Typ	Limits Max	Unit	Test Conditions
f_{MAX}	Maximum Input Clock Frequency	30	40		MHz	Figure 1
t_{PHL}	Propagation Delay, MR to Q Output		18	27	ns	Figure 2
t_{PLH} t_{PHL}	Propagation Delay, Clock to Output		17 18	27 27	ns	Figure 1

AC SETUP REQUIREMENTS (T_A = 25°C, V_{CC} = 5.0 V)

Symbol	Parameter	Limits			Unit	Test Conditions
		Min	Typ	Max		
t_w	Pulse Width, Clock or Clear	20			ns	Figure 1
t_s	Data Setup Time	20			ns	Figure 1
t_h	Hold Time	5.0			ns	Figure 1
t_{rec}	Recovery Time	25			ns	Figure 2

AC WAVEFORMS

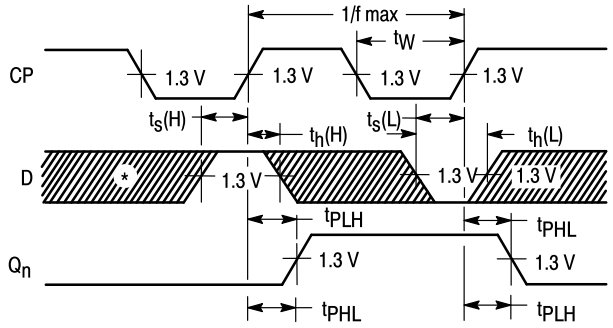

*The shaded areas indicate when the input is permitted to change for predictable output performance.

Figure 1. Clock to Output Delays, Clock Pulse Width, Frequency, Setup and Hold Times Data to Clock

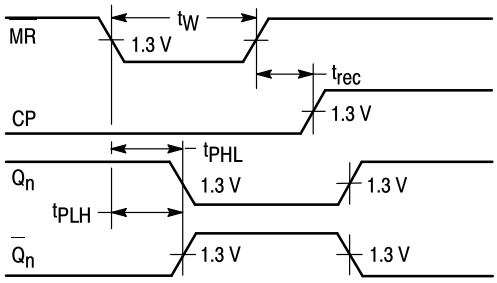

Figure 2. Master Reset to Output Delay, Master Reset Pulse Width, and Master Reset Recovery Time

DEFINITION OF TERMS

SETUP TIME (t_S) — is defined as the minimum time required for the correct logic level to be present at the logic input prior to the clock transition from LOW-to-HIGH in order to be recognized and transferred to the outputs.

HOLD TIME (t_h) — is defined as the minimum time following the clock transition from LOW-to-HIGH that the logic level must be maintained at the input in order to ensure continued recognition. A negative HOLD TIME indicates that the correct logic level may be released prior to the clock transition from LOW-to-HIGH and still be recognized.

RECOVERY TIME (t_{rec}) — is defined as the minimum time required between the end of the reset pulse and the clock transition from LOW-to-HIGH in order to recognize and transfer HIGH data to the Q outputs.

Case 751D-03 DW Suffix
20-Pin Plastic
SO-20 (WIDE)

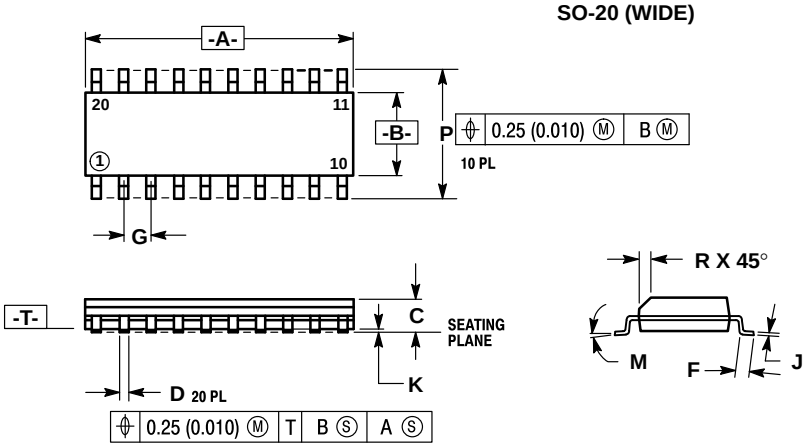

NOTES:
1. DIMENSIONING AND TOLERANCING PER ANSI Y14.5M, 1982.
2. CONTROLLING DIMENSION: MILLIMETER.
3. DIMENSION A AND B DO NOT INCLUDE MOLD PROTRUSION.
4. MAXIMUM MOLD PROTRUSION 0.15 (0.006) PER SIDE.
5. 751D-01, AND -02 OBSOLETE, NEW STANDARD 751D-03.

	MILLIMETERS		INCHES	
DIM	MIN	MAX	MIN	MAX
A	12.65	12.95	0.499	0.510
B	7.40	7.60	0.292	0.299
C	2.35	2.65	0.093	0.104
D	0.35	0.49	0.014	0.019
F	0.50	0.90	0.020	0.035
G	1.27 BSC		0.050 BSC	
J	0.25	0.32	0.010	0.012
K	0.10	0.25	0.004	0.009
M	0°	7°	0°	7°
P	10.05	10.55	0.395	0.415
R	0.25	0.75	0.010	0.029

Case 732-03 J Suffix
20-Pin Ceramic Dual In-Line

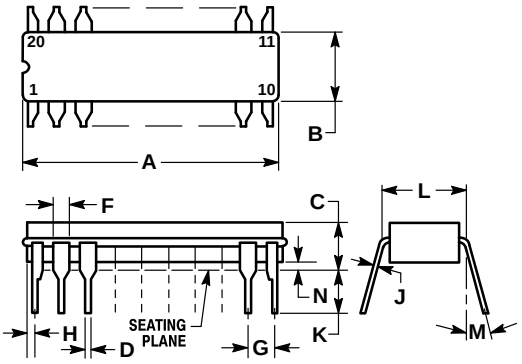

NOTES:
1. LEADS WITHIN 0.25 mm (0.010) DIA., TRUE POSITION AT SEATING PLANE, AT MAXIMUM MATERIAL CONDITION.
2. DIM L TO CENTER OF LEADS WHEN FORMED PARALLEL.
3. DIM A AND B INCLUDES MENISCUS.

	MILLIMETERS		INCHES	
DIM	MIN	MAX	MIN	MAX
A	23.88	25.15	0.940	0.990
B	6.60	7.49	0.260	0.295
C	3.81	5.08	0.150	0.200
D	0.38	0.56	0.015	0.022
F	1.40	1.65	0.055	0.065
G	2.54 BSC		0.100 BSC	
H	0.51	1.27	0.020	0.050
J	0.20	0.30	0.008	0.012
K	3.18	4.06	0.125	0.160
L	7.62 BSC		0.300 BSC	
M	0°	15°	0°	15°
N	0.25	1.02	0.010	0.040

Case 738-03 N Suffix
20-Pin Plastic

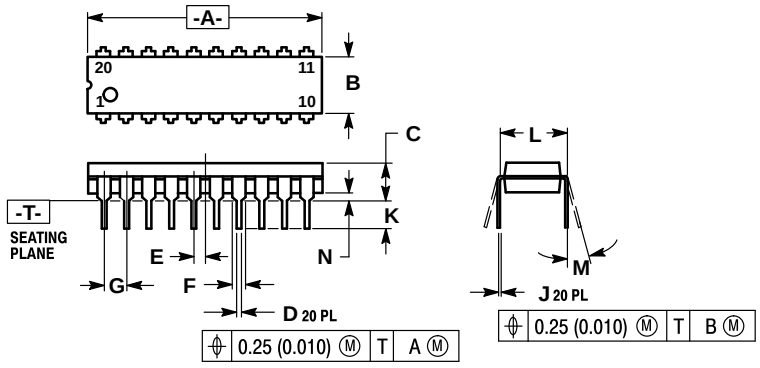

NOTES:
1. DIMENSIONING AND TOLERANCING PER ANSI Y14.5M, 1982.
2. CONTROLLING DIMENSION: INCH.
3. DIMENSION "L" TO CENTER OF LEAD WHEN FORMED PARALLEL.
4. DIMENSION "B" DOES NOT INCLUDE MOLD FLASH.
5. 738-02 OBSOLETE, NEW STANDARD 738-03.

	MILLIMETERS		INCHES	
DIM	MIN	MAX	MIN	MAX
A	25.66	27.17	1.010	1.070
B	6.10	6.60	0.240	0.260
C	3.81	4.57	0.150	0.180
D	0.39	0.55	0.015	0.022
E	1.27 BSC		0.050 BSC	
F	1.27	1.77	0.050	0.070
G	2.54 BSC		0.100 BSC	
J	0.21	0.38	0.008	0.015
K	2.80	3.55	0.110	0.140
L	7.62 BSC		0.300 BSC	
M	0°	15°	0°	15°
N	0.51	1.01	0.020	0.040

Motorola reserves the right to make changes without further notice to any products herein. Motorola makes no warranty, representation or guarantee regarding the suitability of its products for any particular purpose, nor does Motorola assume any liability arising out of the application or use of any product or circuit, and specifically disclaims any and all liability, including without limitation consequential or incidental damages. “Typical” parameters can and do vary in different applications. All operating parameters, including “Typicals” must be validated for each customer application by customer’s technical experts. Motorola does not convey any license under its patent rights nor the rights of others. Motorola products are not designed, intended, or authorized for use as components in systems intended for surgical implant into the body, or other applications intended to support or sustain life, or for any other application in which the failure of the Motorola product could create a situation where personal injury or death may occur. Should Buyer purchase or use Motorola products for any such unintended or unauthorized application, Buyer shall indemnify and hold Motorola and its officers, employees, subsidiaries, affiliates, and distributors harmless against all claims, costs, damages, and expenses, and reasonable attorney fees arising out of, directly or indirectly, any claim of personal injury or death associated with such unintended or unauthorized use, even if such claim alleges that Motorola was negligent regarding the design or manufacture of the part. Motorola and M are registered trademarks of Motorola, Inc. Motorola, Inc. is an Equal Opportunity/Affirmative Action Employer.

Literature Distribution Centers:
USA: Motorola Literature Distribution; P.O. Box 20912; Phoenix, Arizona 85036.
EUROPE: Motorola Ltd.; European Literature Centre; 88 Tanners Drive, Blakelands, Milton Keynes, MK14 5BP, England.
JAPAN: Nippon Motorola Ltd.; 4-32-1, Nishi-Gotanda, Shinagawa-ku, Tokyo 141, Japan.
ASIA PACIFIC: Motorola Semiconductors H.K. Ltd.; Silicon Harbour Center, No. 2 Dai King Street, Tai Po Industrial Estate, Tai Po, N.T., Hong Kong.

SYMBOL	SW1	SW2
t_{PZH}	Open	Closed
t_{PZL}	Closed	Open
t_{PLZ}	Closed	Closed

ENTEGRECİ

Bu belge www.entegreci.com üzerinden sunulmaktadır.

Elektronik komponent tedarikinde Entegreci

Entegreci, Eskişehir merkezli, Türkiye geneline satış yapan bir elektronik komponent mağazasıdır. Entegreler (IC), mikrodenetleyiciler, transistörler, diyotlar, pasif elemanlar, konnektörler, modüller ve geliştirme kartları tek adetten seri üretim adetlerine kadar satılır. Ürün sayfalarında güncel stok durumunu, fiyatı ve datasheet bağlantısını bulabilirsiniz.

Parça koduyla arama

Üretici parça numarasını yazın; stok ve fiyatı hemen görün.

www.entegreci.com

Ürün kategorileri

Entegreden kapasitöre tüm elektronik komponent kategorileri.

Kategorilere göz atın

Üreticiler

Aradığınız üreticinin ürünlerini tek sayfada inceleyin.

Üreticileri görün

Toplu alım ve teklif

Listede olmayan ya da yüksek adetli parçalar için teklif isteyin.

Teklif isteyin

www.entegreci.com | **destek@entegreci.com** | **0850 305 90 34**

Entegreci is an online electronic components store based in Türkiye. Search by manufacturer part number to see stock, prices and datasheets for integrated circuits, microcontrollers, transistors, passive components and connectors, or request a quote for parts that are not listed.

Bu sayfa Entegreci tarafından eklenmiştir. Belgenin önceki sayfaları asıl yayıncısına aittir ve içeriği değiştirilmemiştir; en güncel sürüm için belgenin yayıncısına başvurun.