National Semiconductor

June 1989

54LS74/DM54LS74A/DM74LS74A Dual Positive-Edge-Triggered D Flip-Flops with Preset, Clear and Complementary Outputs

General Description

This device contains two independent positive-edge-triggered D flip-flops with complementary outputs. The information on the D input is accepted by the flip-flops on the positive going edge of the clock pulse. The triggering occurs at a voltage level and is not directly related to the transition time of the rising edge of the clock. The data on the D input may be changed while the clock is low or high without affecting the outputs as long as the data setup and hold times are not violated. A low logic level on the preset or clear inputs will set or reset the outputs regardless of the logic levels of the other inputs.

Features

- Alternate military/aerospace device (54LS74) is available. Contact a National Semiconductor Sales Office/ Distributor for specifications.

Connection Diagram

Dual-In-Line Package

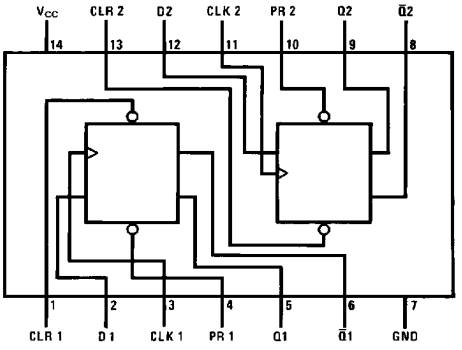

TL/F/6373–1

Order Number 54LS74DMQB, 54LS74FMQB, 54LS74LMQB, DM54LS74AJ, DM54LS74AW, DM74LS74AM or DM74LS74AN
See NS Package Number E20A, J14A, M14A, N14A or W14B

Function Table

Inputs				Outputs	
PR	CLR	CLK	D	Q	$\overline{Q}$
L	H	X	X	H	L
H	L	X	X	L	H
L	L	X	X	H*	H*
H	H	↑	H	H	L
H	H	↑	L	L	H
H	H	L	X	Q_0	$\overline{Q}_0$

H = High Logic Level

X = Either Low or High Logic Level

L = Low Logic Level

↑ = Positive-going Transition

* = This configuration is nonstable; that is, it will not persist when either the preset and/or clear inputs return to their inactive (high) level.

Q_0 = The output logic level of Q before the indicated input conditions were established.

©1995 National Semiconductor Corporation

RRD-B30M105/Printed in U. S. A.

This Material Copyrighted By Its Respective Manufacturer

Absolute Maximum Ratings (Note)

If Military/Aerospace specified devices are required, please contact the National Semiconductor Sales Office/Distributors for availability and specifications.

Supply Voltage	7V
Input Voltage	7V
Operating Free Air Temperature Range	
DM54LS and 54LS	−55°C to +125°C
DM74LS	0°C to +70°C
Storage Temperature Range	−65°C to +150°C

Note: *The "Absolute Maximum Ratings" are those values beyond which the safety of the device cannot be guaranteed. The device should not be operated at these limits. The parametric values defined in the "Electrical Characteristics" table are not guaranteed at the absolute maximum ratings. The "Recommended Operating Conditions" table will define the conditions for actual device operation.*

Recommended Operating Conditions

Symbol	Parameter		DM54LS74A			DM74LS74A			Units
			Min	Nom	Max	Min	Nom	Max	
V_{CC}	Supply Voltage		4.5	5	5.5	4.75	5	5.25	V
V_{IH}	High Level Input Voltage		2			2			V
V_{IL}	Low Level Input Voltage				0.7			0.8	V
I_{OH}	High Level Output Current				−0.4			−0.4	mA
I_{OL}	Low Level Output Current				4			8	mA
f_{CLK}	Clock Frequency (Note 2)		0		25	0		25	MHz
f_{CLK}	Clock Frequency (Note 3)		0		20	0		20	MHz
t_W	Pulse Width (Note 2)	Clock High	18			18			ns
		Preset Low	15			15			
		Clear Low	15			15			
t_W	Pulse Width (Note 3)	Clock High	25			25			ns
		Preset Low	20			20			
		Clear Low	20			20			
t_{SU}	Setup Time (Notes 1 and 2)		20 ↑			20 ↑			ns
t_{SU}	Setup Time (Notes 1 and 3)		25 ↑			25 ↑			ns
t_H	Hold Time (Note 1 and 4)		0 ↑			0 ↑			ns
T_A	Free Air Operating Temperature		−55		125	0		70	°C

Note 1: The symbol (↑) indicates the rising edge of the clock pulse is used for reference.

Note 2: C_L = 15 pF, R_L = 2 kΩ, T_A = 25°C, and V_{CC} = 5V.

Note 3: C_L = 50 pF, R_L = 2 kΩ, T_A = 25°C, and V_{CC} = 5V.

Note 4: T_A = 25°C and V_{CC} = 5V.

This Material Copyrighted By Its Respective Manufacturer

Electrical Characteristics over recommended operating free air temperature range (unless otherwise noted)

Symbol	Parameter	Conditions		Min	Typ (Note 1)	Max	Units
V_I	Input Clamp Voltage	V_{CC} = Min, I_I = −18 mA				−1.5	V
V_{OH}	High Level Output Voltage	V_{CC} = Min, I_{OH} = Max, V_{IL} = Max, V_{IH} = Min	DM54	2.5	3.4		V
			DM74	2.7	3.4		
V_{OL}	Low Level Output Voltage	V_{CC} = Min, I_{OL} = Max, V_{IL} = Max, V_{IH} = Min	DM54		0.25	0.4	V
			DM74		0.35	0.5	
		I_{OL} = 4 mA, V_{CC} = Min	DM74		0.25	0.4	
I_I	Input Current @Max Input Voltage	V_{CC} = Max, V_I = 7V	Data			0.1	mA
			Clock			0.1	
			Preset			0.2	
			Clear			0.2	
I_{IH}	High Level Input Current	V_{CC} = Max, V_I = 2.7V	Data			20	μA
			Clock			20	
			Clear			40	
			Preset			40	
I_{IL}	Low Level Input Current	V_{CC} = Max, V_I = 0.4V	Data			−0.4	mA
			Clock			−0.4	
			Preset			−0.8	
			Clear			−0.8	
I_{OS}	Short Circuit Output Current	V_{CC} = Max (Note 2)	DM54	−20		−100	mA
			DM74	−20		−100	
I_{CC}	Supply Current	V_{CC} = Max (Note 3)			4	8	mA

Note 1: All typicals are at V_{CC} = 5V, T_A = 25°C.

Note 2: Not more than one output should be shorted at a time, and the duration should not exceed one second. For devices, with feedback from the outputs, where shorting the outputs to ground may cause the outputs to change logic state an equivalent test may be performed where V_O = 2.25V and 2.125V for DM54 and DM74 series, respectively, with the minimum and maximum limits reduced by one half from their stated values. This is very useful when using automatic test equipment.

Note 3: With all outputs open, I_{CC} is measured with CLOCK grounded after setting the Q and $\overline{Q}$ outputs high in turn.

Switching Characteristics at V_{CC} = 5V and T_A = 25°C (See Section 1 for Test Waveforms and Output Load)

Symbol	Parameter	From (Input) To (Output)	R_L = 2 kΩ				Units
			C_L = 15 pF		C_L = 50 pF		
			Min	Max	Min	Max	
f_{MAX}	Maximum Clock Frequency		25		20		MHz
t_{PLH}	Propagation Delay Time Low to High Level Output	Clock to Q or $\overline{Q}$		25		35	ns
t_{PHL}	Propagation Delay Time High to Low Level Output	Clock to Q or $\overline{Q}$		30		35	ns
t_{PLH}	Propagation Delay Time Low to High Level Output	Preset to Q		25		35	ns
t_{PHL}	Propagation Delay Time High to Low Level Output	Preset to $\overline{Q}$		30		35	ns
t_{PLH}	Propagation Delay Time Low to High Level Output	Clear to $\overline{Q}$		25		35	ns
t_{PHL}	Propagation Delay Time High to Low Level Output	Clear to Q		30		35	ns

This Material Copyrighted By Its Respective Manufacturer

Physical Dimensions inches (millimeters)

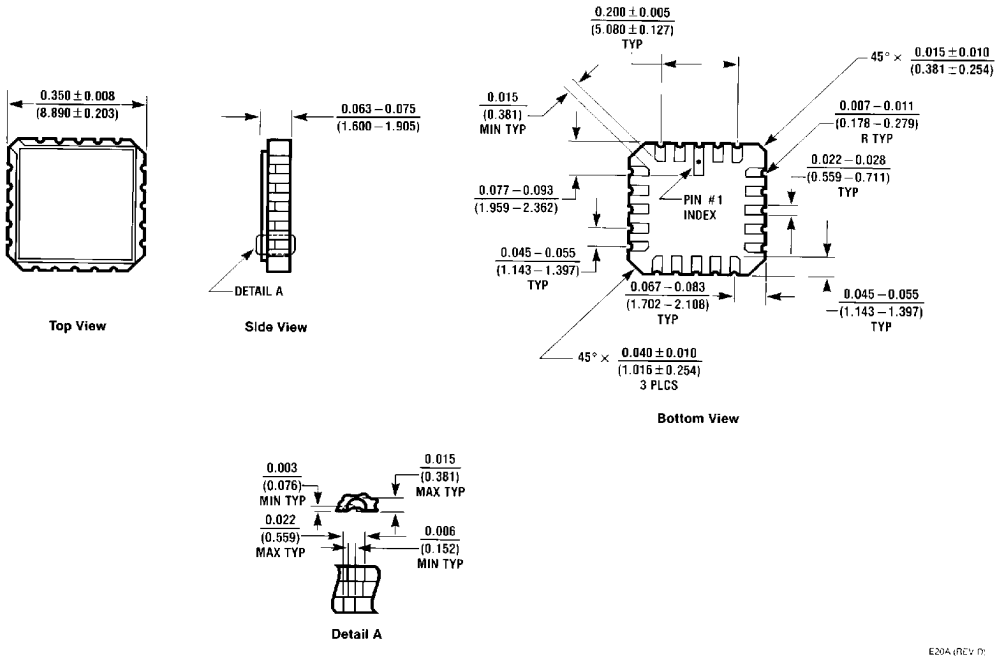

Ceramic Leadless Chip Carrier Package (E)
Order Number 54LS74LMQB
NS Package Number E20A

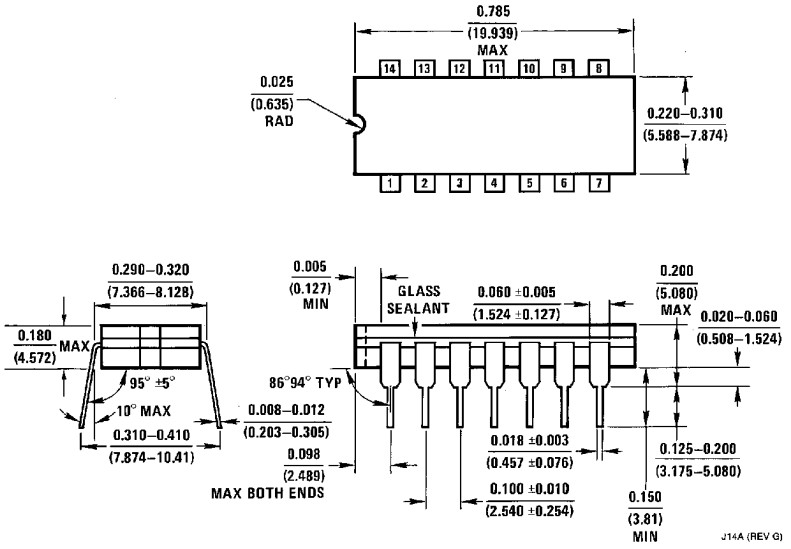

14-Lead Ceramic Dual-In-Line Package (J)
Order Number 54LS74DMQB or DM54LS74AJ
NS Package Number J14A

This Material Copyrighted By Its Respective Manufacturer

Physical Dimensions inches (millimeters) (Continued)

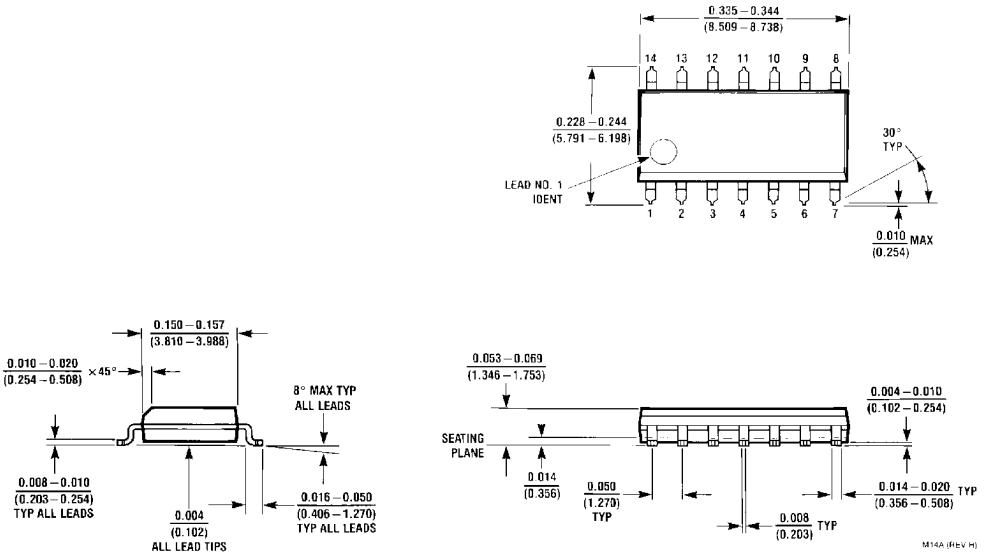

14-Lead Small Outline Molded Package (M)
Order Number DM74LS74AM
NS Package Number M14A

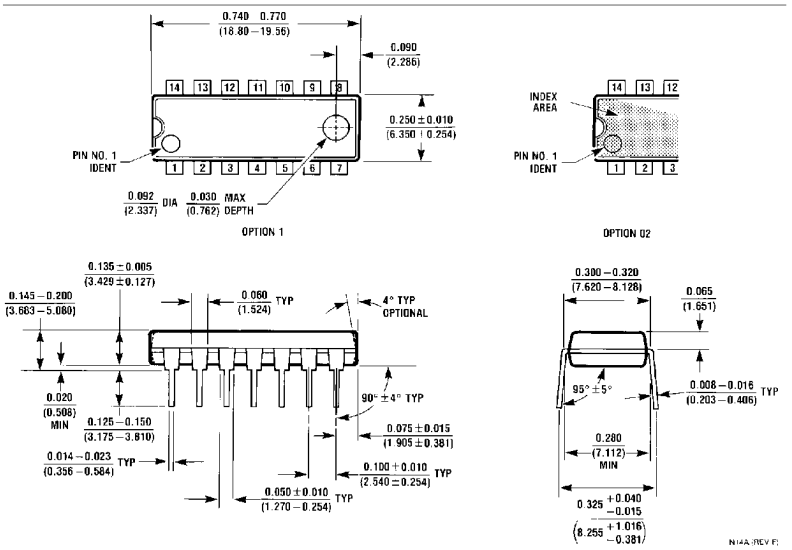

14-Lead Molded Dual-In-Line Package (N)
Order Number DM74LS74AN
NS Package Number N14A

This Material Copyrighted By Its Respective Manufacturer

Physical Dimensions inches (millimeters) (Continued)

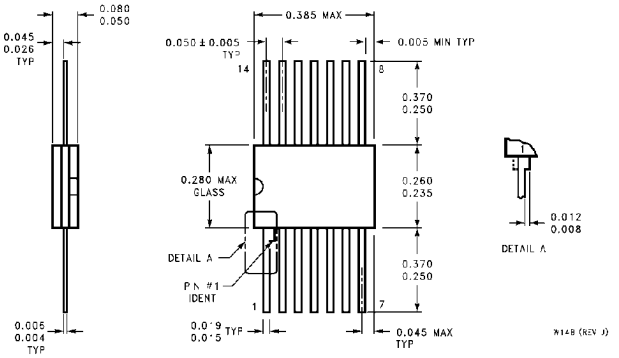

14-Lead Ceramic Flat Package (W)
Order Number 54LS74FMQB or DM54LS74AW
NS Package Number W14B

LIFE SUPPORT POLICY

NATIONAL'S PRODUCTS ARE NOT AUTHORIZED FOR USE AS CRITICAL COMPONENTS IN LIFE SUPPORT DEVICES OR SYSTEMS WITHOUT THE EXPRESS WRITTEN APPROVAL OF THE PRESIDENT OF NATIONAL SEMICONDUCTOR CORPORATION. As used herein:

1. Life support devices or systems are devices or systems which, (a) are intended for surgical implant into the body, or (b) support or sustain life, and whose failure to perform, when properly used in accordance with instructions for use provided in the labeling, can be reasonably expected to result in a significant injury to the user.
2. A critical component is any component of a life support device or system whose failure to perform can be reasonably expected to cause the failure of the life support device or system, or to affect its safety or effectiveness.

National Semiconductor Corporation
1111 West Bardin Road
Arlington, TX 76017
Tel: 1(800) 272-9959
Fax: 1(800) 737-7018

National Semiconductor Europe
Fax: (+49) 0-180-530 85 86
Email: cnjwge@tevm2.nsc.com
Deutsch Tel: (+49) 0-180-530 85 85
English Tel: (+49) 0-180-532 78 32
Français Tel: (+49) 0-180-532 93 58
Italiano Tel: (+49) 0-180-534 16 80

National Semiconductor Hong Kong Ltd.
13th Floor, Straight Block,
Ocean Centre, 5 Canton Rd.
Tsimshatsui, Kowloon
Hong Kong
Tel: (852) 2737-1600
Fax: (852) 2736-9960

National Semiconductor Japan Ltd.
Tel: 81-043-299-2309
Fax: 81-043-299-2408

National does not assume any responsibility for use of any circuitry described, no circuit patent licenses are implied and National reserves the right at any time without notice to change said circuitry and specifications.

This Material Copyrighted By Its Respective Manufacturer

ENTEGRECİ

Bu belge www.entegreci.com üzerinden sunulmaktadır.

Elektronik komponent tedarikinde Entegreci

Entegreci, Eskişehir merkezli, Türkiye geneline satış yapan bir elektronik komponent mağazasıdır. Entegreler (IC), mikrodenetleyiciler, transistörler, diyotlar, pasif elemanlar, konnektörler, modüller ve geliştirme kartları tek adetten seri üretim adetlerine kadar satılır. Ürün sayfalarında güncel stok durumunu, fiyatı ve datasheet bağlantısını bulabilirsiniz.

Parça koduyla arama

Üretici parça numarasını yazın; stok ve fiyatı hemen görün.

www.entegreci.com

Ürün kategorileri

Entegreden kapasitöre tüm elektronik komponent kategorileri.

Kategorilere göz atın

Üreticiler

Aradığınız üreticinin ürünlerini tek sayfada inceleyin.

Üreticileri görün

Toplu alım ve teklif

Listede olmayan ya da yüksek adetli parçalar için teklif isteyin.

Teklif isteyin

www.entegreci.com | **destek@entegreci.com** | **0850 305 90 34**

Entegreci is an online electronic components store based in Türkiye. Search by manufacturer part number to see stock, prices and datasheets for integrated circuits, microcontrollers, transistors, passive components and connectors, or request a quote for parts that are not listed.

Bu sayfa Entegreci tarafından eklenmiştir. Belgenin önceki sayfaları asıl yayıncısına aittir ve içeriği değiştirilmemiştir; en güncel sürüm için belgenin yayıncısına başvurun.