2A 20V Synchronous Rectified Step-Down Converte TD1482A

General Description

The TD1482A is a monolithic pulse-width-modulated (PWM) synchronous step-down switch mode regulator with two internal power MOSFETs. It achieves 2A continuous output current over a wide input supply range with excellent load and line regulation. Current mode operation provides fast transient response and eases loop stabilization. Fault condition protection includes cycle-by-cycle current limit and thermal shutdown.

This device, available in an SOP8 package, provides a very compact solution with minimal external components.

Features

- 2A Output Current
- Wide 4.75V to 20V Operating Input Range
- Integrated 130mΩ Power MOSFET Switches
- Output Adjustable from 0.923V to 18V
- Up to 93% Efficiency
- Programmable Soft-Start
- Stable with Low ESR Ceramic Output Capacitors
- Fixed 340KHz Frequency
- Cycle-by-Cycle Over Current Protection
- Input Under Voltage Lockout

Applications

- Distributed Power Systems
- Networking Systems
- FPGA, DSP, ASIC Power Supplies
- Green Electronics/ Appliances
- Notebook Computers

Package Types

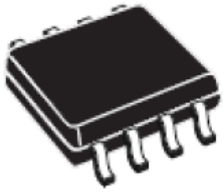

Figure 1. Package Types of TD1482A

Pin Configurations

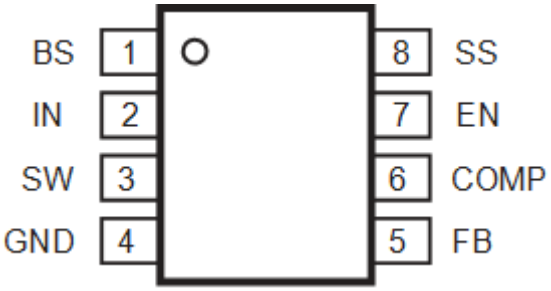

Figure 2 Pin Configuration of TD1482A(Top View)

Pin Description

Pin Number	Pin Name	Description
1	BS	High-Side Gate Drive Boost Input. BS supplies the drive for the high-side N-Channel MOSFET switch. Connect a 0.01μF or greater capacitor from SW to BS to power the high side switch.
2	IN	Supply Voltage. The TD1482A operates from a +4.75V to +20V unregulated input. C1 is needed to prevent large voltage spikes from appearing at the input.
3	SW	Power Switching Output. SW is the switching node that supplies power to the output. Connect the output LC filter from SW to the output load. Note that a capacitor is required from SW to BS to power the high-side switch.
4	GND	Ground.
5	FB	Feedback Input. FB senses the output voltage to regulate that voltage. Drive FB with a resistive voltage divider from the output voltage. The feedback threshold is 0.923V.
6	COMP	Compensation Node. COMP is used to compensate the regulation control loop. Connect a series RC network from COMP to GND to compensate the regulation control loop. In some cases, an additional capacitor from COMP to GND is required.
7	EN	Enable Input. EN is a digital input that turns the regulator on or off. Drive EN high to turn on the regulator, drive it low to turn it off. Pull up with 100kΩ resistor for automatic startup.
8	SS	Soft-Start Control Input. SS controls the soft start period. Connect a capacitor from SS to GND to set the soft-start period. A 0.1μF capacitor sets the soft-start period to 15ms. To disable the soft-start feature, leave SS unconnected.

Ordering Information

TD1482A □ □

Circuit Type

Package
P:SOP8

Packing:
Blank：Tube
R:Type and Reel

Function Block

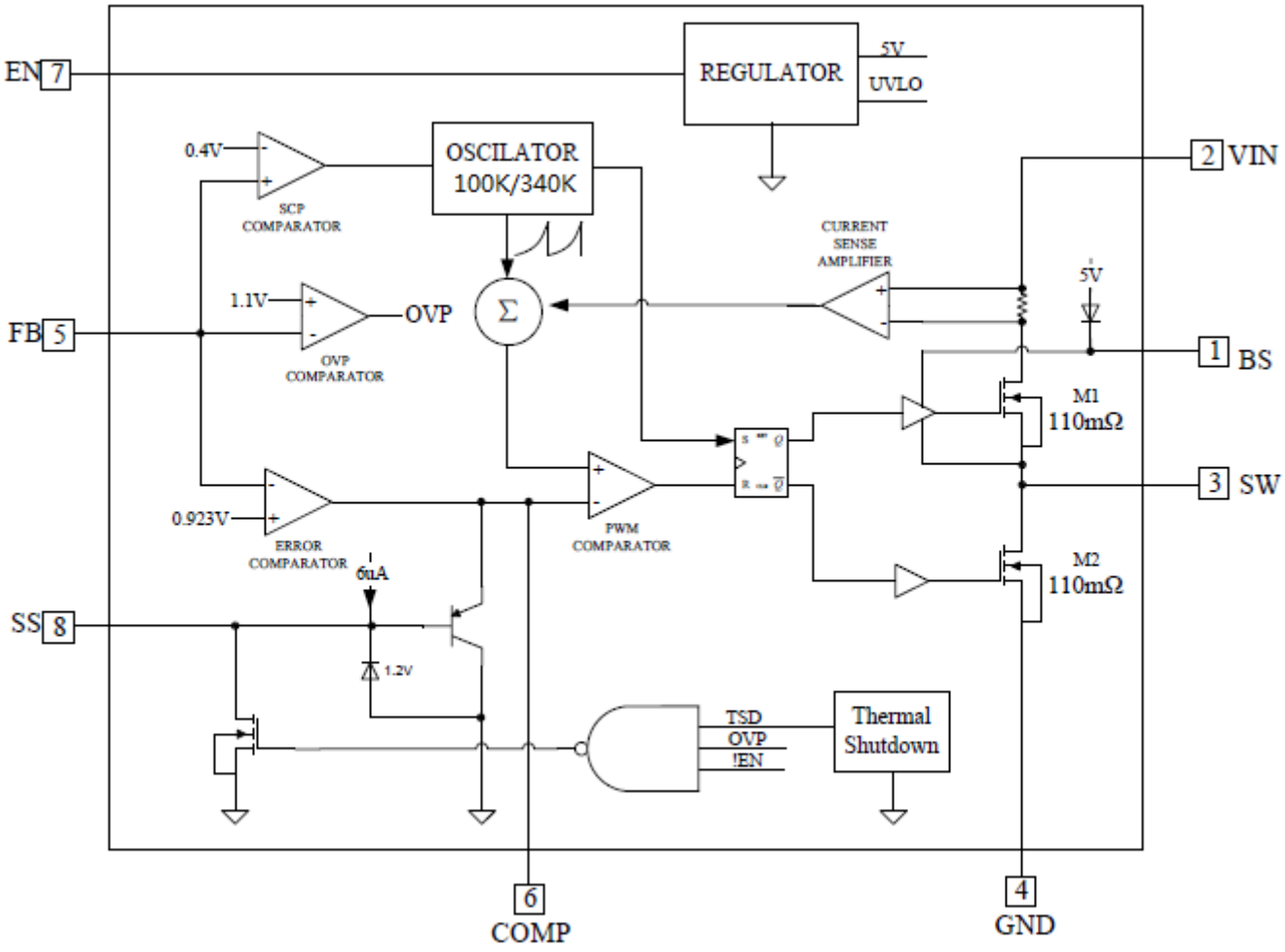

Figure 3 Function Block Diagram of TD1482A

Absolute Maximum Ratings

Parameter	Symbol	Value	Unit
Supply Voltage	V_{IN}	-0.3 to 20	V
Switch Node Voltage	V_{SW}	20	V
Boost Voltage	V_{BS}	V_{SW} – 0.3V to V_{SW}+6V	V
Output Voltage	V_{OUT}	0.923V to 18	V
All Other Pins		–0.3V to +6V	V
Operating Junction Temperature	T_J	150	ºC
Operating Ambient Temperature	T_A	-40 to 80	ºC
Storage Temperature	T_{STG}	-65 to 150	ºC
Lead Temperature (Soldering, 10 sec)	T_{LEAD}	260	ºC
ESD (HBM)		2000	V
MSL		Level3	
Thermal Resistance-Junction to Ambient	RθJA	90	ºC / W
Thermal Resistance-Junction to Case	RθJC	45	ºC / W

Electrical Characteristics

V_{IN} = 12V, T_a = 25℃ unless otherwise specified.

Parameters	Symbol	Test Condition	Min.	Typ.	Max.	Unit
Shutdown Supply Current		VEN = 0V		1	3.0	μA
Supply Current		VEN = 2.0V; VFB = 1.0V		1.3	1.5	mA
Feedback Voltage	VFB	4.75V ≤ VIN ≤ 20V	0.900	0.923	0.946	V
Feedback Overvoltage Threshold				1.1		V
Error Amplifier Voltage Gain *	AEA			400		V/V
Error Amplifier Transconductance	GEA	ΔIC = ±10μA		800		μA/V
High-Side Switch On Resistance *	RDS(ON)1			130		mΩ
Low-Side Switch On Resistance *	RDS(ON)2			130		mΩ
High-Side Switch Leakage Current		VEN = 0V, VSW = 0V			10	μA
Upper Switch Current Limit		Minimum Duty Cycle	2.4	3.4		A
Lower Switch Current Limit		From Drain to Source		1.1		A
COMP to Current Sense Transconductance	GCS			3.5		A/V
Oscillation Frequency	Fosc1			340		KHz
Short Circuit Oscillation Frequency	Fosc2	VFB = 0V		100		KHz
Maximum Duty Cycle	DMAX	VFB = 1.0V		90		%
Minimum On Time *				220		ns
EN Shutdown Threshold Voltage		VEN Rising	1.1	1.5	2.0	V
EN Shutdown Threshold Voltage Hysteresis				210		mV
EN Lockout Threshold Voltage			2.2	2.5	2.7	V
EN Lockout Hysterisis				210		mV

Electrical Characteristics(Cont.)

V_{IN} = 12V, T_a = 25℃ unless otherwise specified.

Parameters	Symbol	Test Condition	Min.	Typ.	Max.	Unit
Input Under Voltage Lockout Threshold		V_{IN} Rising	3.80	4.10	4.40	V
Input Under Voltage Lockout Threshold Hysteresis				210		mV
Soft-Start Current		V_{SS} = 0V		6		μA
Soft-Start Period		C_{SS} = 0.1μF		1 5		ms
Thermal Shutdown *				160		°C

Typical Performance Characteristics

VIN=12V，Vo=3.3V，L=10uH，C1=10uF，C2=22uF，TA=+25℃

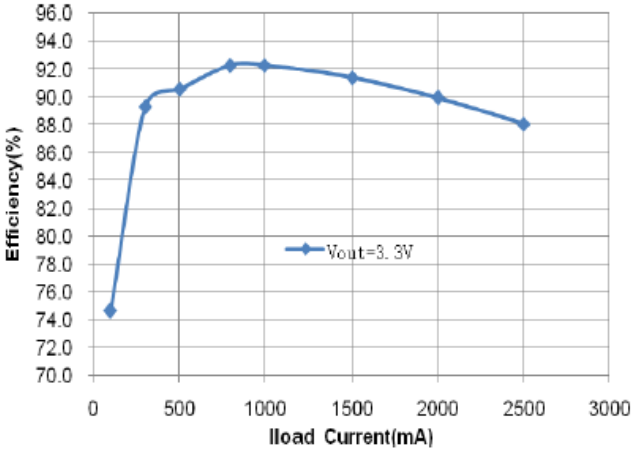

Figure 4. Efficiency vs Load Current

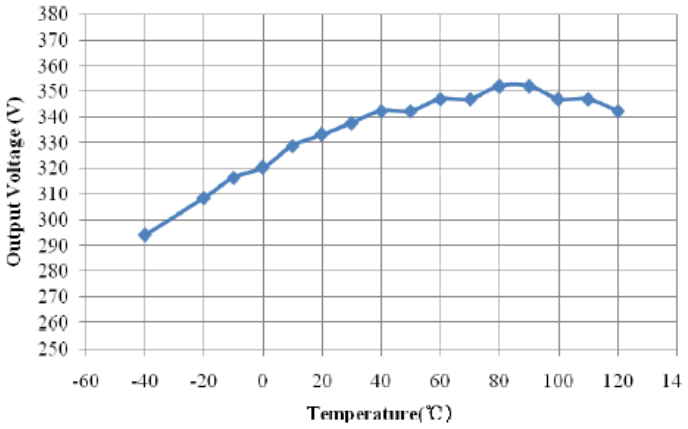

Figure 5. OSC Frequency vs Temperature

Typical Performance Characteristics(Cont.)

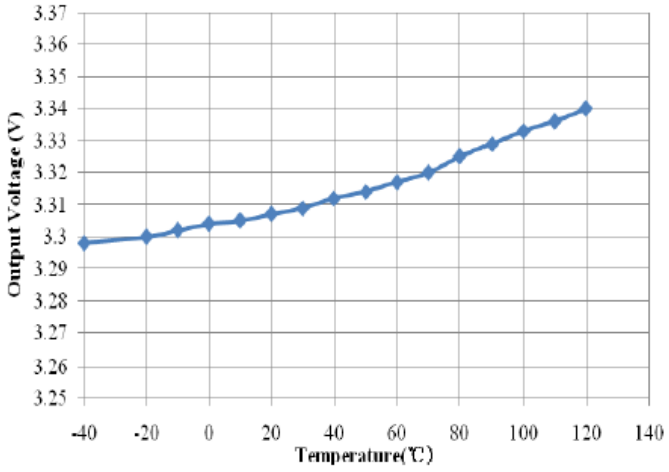

Figure 6. Output Voltage vs Temperature

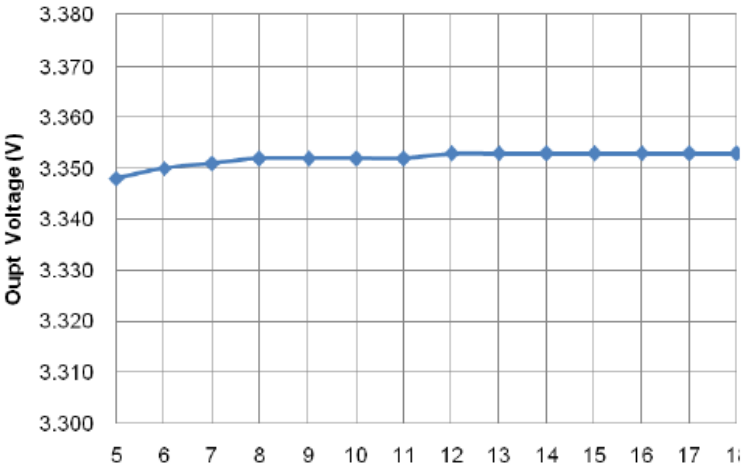

Figure 7. Line Regulation

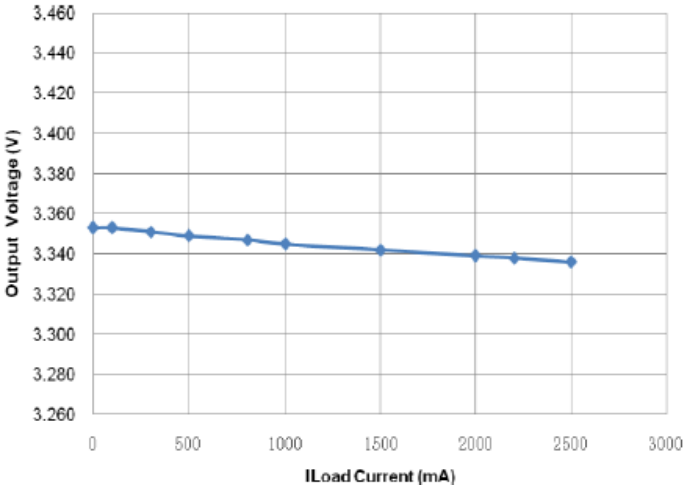

Figure 8.Load Regulation

Operating Waveforms

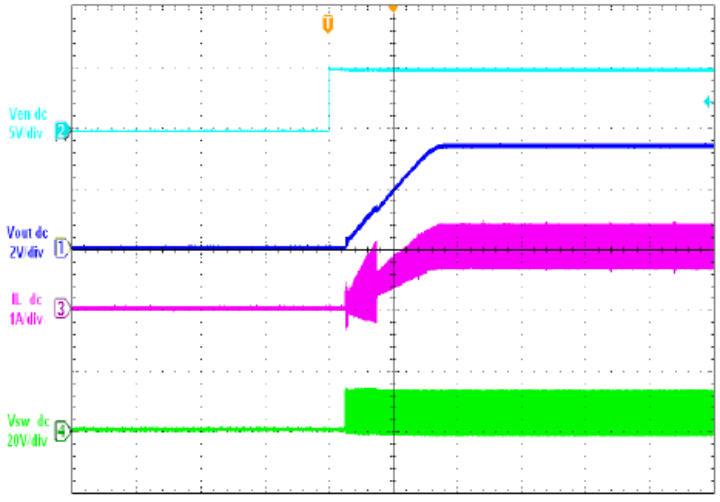

VIN=12V，VOUT=3.3V，IOUT=1A（Resistance Load）

Figure 9. Startup through Enable

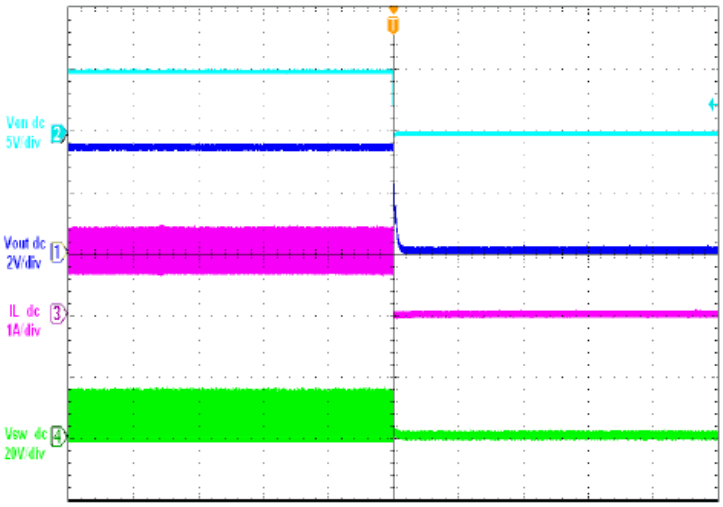

VIN=12V，VOUT=3.3V，IOUT=1A（Resistance Load）

Figure 10. Shutdown through Enable

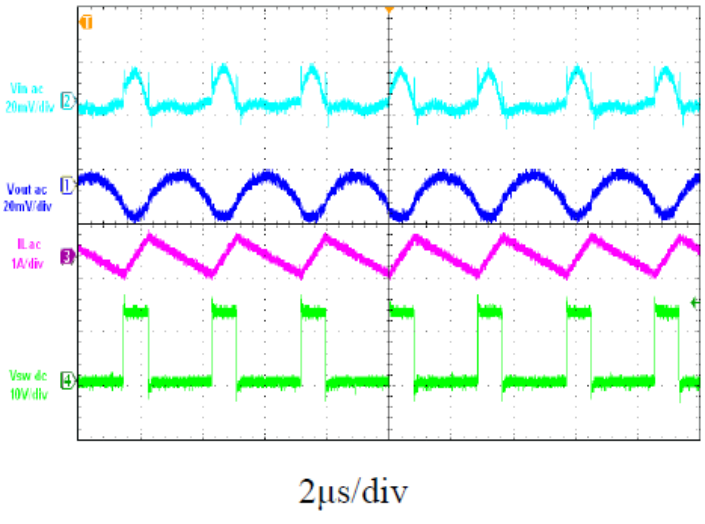

VIN=12V，VOUT=3.3V，IOUT=0A

Figure11 Light Load Operation

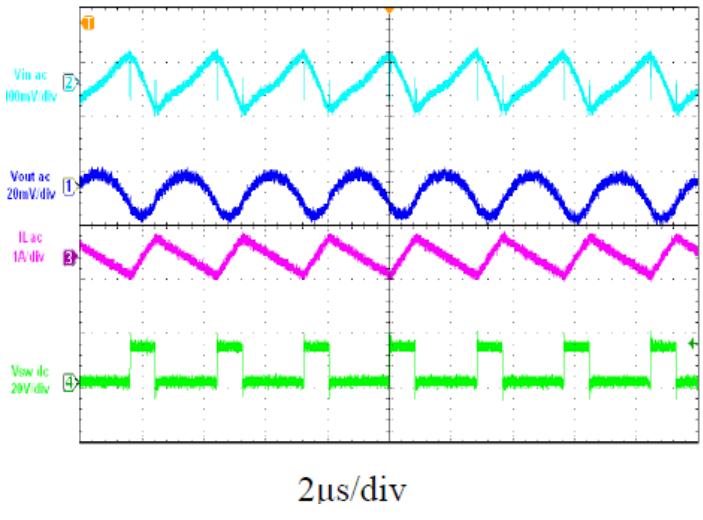

VIN=12V，VOUT=3.3V，IOUT=1A

Figure12 Medium Load Operation

Operating Waveforms(Cont.)

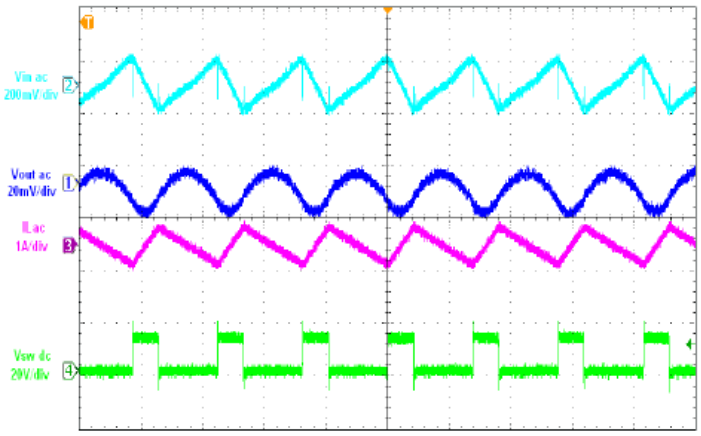

2μs/div

VIN=12V，VOUT=3.3V，IOUT=2A

Figure 13. Heavy Load Operation

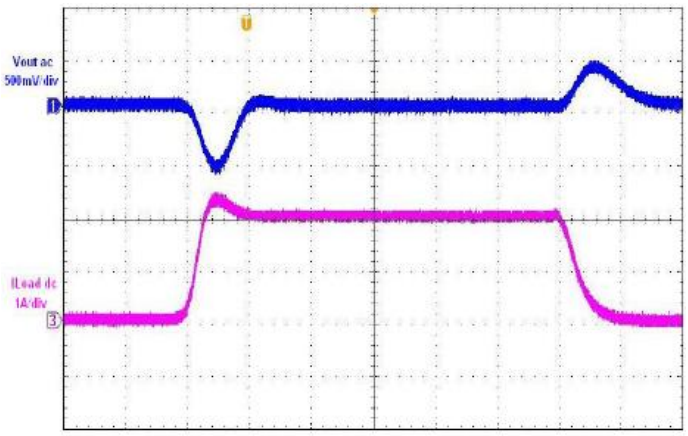

40μs/div

VIN=12V，VOUT=3.3V，IOUT=0A to 2A

Figure 14.Load Transient

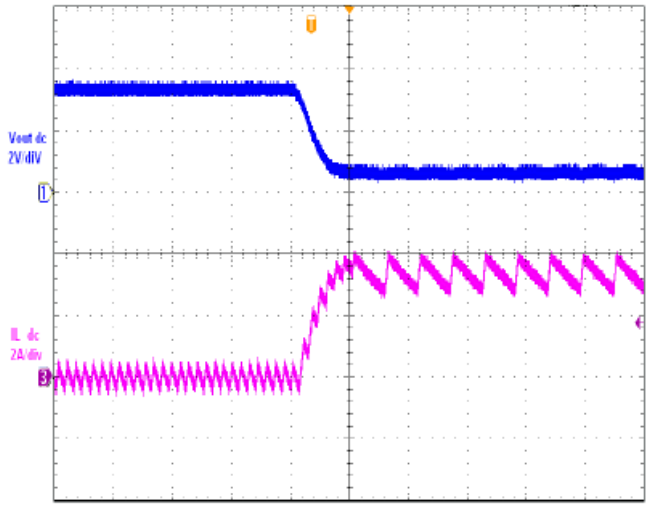

20μs/div

Figure15 Short Circuit Protection

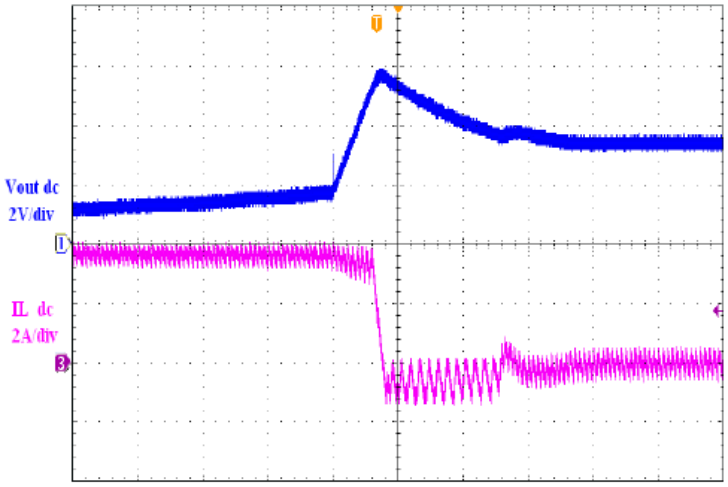

40μs/div

Figure16 Short Circuit Recovery

Typical Application Circuit

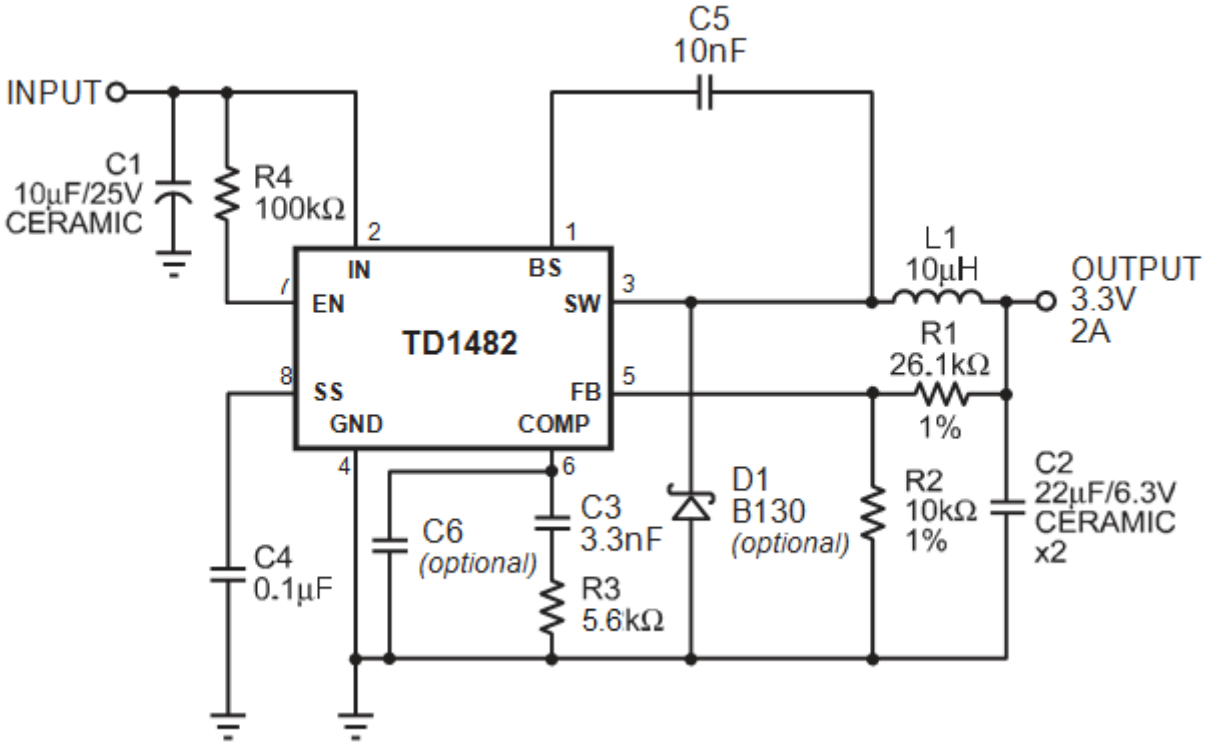

Fig17. TD1482A with 3.3V Output, 22µF/6.3V Ceramic Output Capacitor

Function Description

Component Selection

Setting the Output Voltage

The output voltage is set using a resistive voltage divider from the output voltage to FB pin.The voltage divider divides the output voltage down to the feedback voltage by the ratio:

$$V_{FB} = V_{OUT} \frac{R2}{R1+R2}$$

Where V_{FB} is the feedback voltage and V_{OUT} is the output voltage.Thus the output voltage is:

$$V_{OUT} = 0.923 \times \frac{R1+R2}{R2}$$

R2 can be as high as 100kΩ, but a typical value is 10kΩ. Using the typical value for R2, R1 is determined by:

$$R1 = 10.83 \times (V_{OUT} - 0.923) \ (k\Omega)$$

For example, for a 3.3V output voltage, R2 is 10kΩ, and R1 is 26.1kΩ.

Inductor

The inductor is required to supply constant current to the output load while being driven by the switched input voltage. A larger value inductor will result in less ripple current that will result in lower output ripple voltage. However,the larger value inductor will have a larger physical size, higher series resistance, and/or lower saturation current. A good rule for determining the inductance to use is to allow the peak-to-peak ripple current in the inductor to be approximately 30% of the maximum switch current limit. Also, make sure that the peak inductor current is below the maximum switch current limit. The inductance value can be calculated by:

$$L = \frac{V_{OUT}}{f_S \times \Delta I_L} \times \left(1 - \frac{V_{OUT}}{V_{IN}}\right)$$

Where V_{OUT} is the output voltage, V_{IN} is the input voltage, f_S is the switching frequency, and ΔI_L is the peak-to-peak inductor ripple current.

Choose an inductor that will not saturate under the maximum inductor peak current. The peak inductor current can be calculated by:

$$I_{LP} = I_{LOAD} + \frac{V_{OUT}}{2 \times f_S \times L} \times \left(1 - \frac{V_{OUT}}{V_{IN}}\right)$$

Where I_{LOAD} is the load current.

The choice of which style inductor to use mainly depends on the price vs. size requirements and any EMI requirements.

Optional Schottky Diode

During the transition between high-side switch and low-side switch, the body diode of the lowside power MOSFET conducts the inductor current. The forward voltage of this body diode is high. An optional Schottky diode may be paralleled between the SW pin and GND pin to improve overall efficiency. Table 1 lists example Schottky diodes and their Manufacturers.

Part Number	Voltage/Current	Vendor
B130	30V, 1A	Diodes, Inc.
SK13	30V, 1A	Diodes, Inc.
MBRS130	30V, 1A	International Rectifier

Input Capacitor

The input current to the step-down converter is discontinuous, therefore a capacitor is required to supply the AC current to the step-down converter while maintaining the DC input voltage. Use low ESR capacitors for the best performance. Ceramic capacitors are preferred, but tantalum or low-ESR electrolytic capacitors may also suffice. Choose X5R or X7R dielectrics when using ceramic capacitors.

Since the input capacitor (C1) absorbs the input switching current it requires an adequate ripple current rating. The RMS current in the input capacitor can be estimated by:

$$I_{C1} = I_{LOAD} \times \sqrt{\frac{V_{OUT}}{V_{IN}} \times \left(1 - \frac{V_{OUT}}{V_{IN}}\right)}$$

The worst-case condition occurs at $V_{IN} = 2V_{OUT}$,where $I_{C1} = I_{LOAD}/2$. For simplification, choose the input capacitor whose RMS current rating greater than half of the maximum load current.

The input capacitor can be electrolytic, tantalum or ceramic. When using electrolytic or tantalum capacitors, a small, high quality ceramic capacitor, i.e. 0.1μF, should be placed as close to the IC as possible. When using ceramic capacitors, make sure that they have enough capacitance to provide sufficient charge to prevent excessive voltage ripple at input. The input voltage ripple for low ESR capacitors can be estimated by:

$$\Delta V_{IN} = \frac{I_{LOAD}}{C1 \times f_S} \times \frac{V_{OUT}}{V_{IN}} \times \left(1 - \frac{V_{OUT}}{V_{IN}}\right)$$

Where C1 is the input capacitance value.

Output Capacitor

The output capacitor is required to maintain the DC output voltage. Ceramic, tantalum, or low ESR electrolytic capacitors are recommended. Low ESR capacitors are preferred to keep the output voltage ripple low. The output voltage ripple can be estimated by:

$$\Delta V_{OUT} = \frac{V_{OUT}}{f_S \times L} \times \left(1 - \frac{V_{OUT}}{V_{IN}}\right) \times \left(R_{ESR} + \frac{1}{8 \times f_S \times C2}\right)$$

Where C2 is the output capacitance value and R_{ESR} is the equivalent series resistance (ESR) value of the output capacitor.

In the case of ceramic capacitors, the impedance at the switching frequency is dominated by the capacitance. The output voltage ripple is mainly caused by the capacitance. For simplification, the output voltage ripple can be estimated by:

$$\Delta V_{OUT} = \frac{V_{OUT}}{8 \times f_S^2 \times L \times C2} \times \left(1 - \frac{V_{OUT}}{V_{IN}}\right)$$

In the case of tantalum or electrolytic capacitors,the ESR dominates the impedance at the switching frequency. For simplification, the output ripple can be approximated to:

$$\Delta V_{OUT} = \frac{V_{OUT}}{f_S \times L} \times \left(1 - \frac{V_{OUT}}{V_{IN}}\right) \times R_{ESR}$$

The characteristics of the output capacitor also affect the stability of the regulation system. The TD1482A can be optimized for a wide range of capacitance and ESR values.

Compensation Components

TD1482A employs current mode control for easy compensation and fast transient response. The system stability and transient response are controlled through the COMP pin. COMP pin is the output of the internal transconductance error amplifier. A series capacitor-resistor combination sets a pole-zero combination to control the characteristics of the control system.

The DC gain of the voltage feedback loop is given by:

$$A_{VDC} = R_{LOAD} \times G_{CS} \times A_{EA} \times \frac{V_{FB}}{V_{OUT}}$$

Where A_{VEA} is the error amplifier voltage gain;G_{CS} is the current sense transconductance and R_{LOAD} is the load resistor value.

The system has two poles of importance. One is due to the compensation capacitor (C3) and the output resistor of the error amplifier, and the other is due to the output capacitor and the load resistor. These poles are located at:

$$f_{P1} = \frac{G_{EA}}{2\pi \times C3 \times A_{VEA}}$$

$$f_{P2} = \frac{1}{2\pi \times C2 \times R_{LOAD}}$$

Where G_{EA} is the error amplifier transconductance.

The system has one zero of importance, due to the compensation capacitor (C3) and the compensation resistor (R3). This zero is located at:

$$f_{Z1} = \frac{1}{2\pi \times C3 \times R3}$$

The system may have another zero of importance, if the output capacitor has a large capacitance and/or a high ESR value. The zero,due to the ESR and capacitance of the output capacitor, is located at:

$$f_{ESR} = \frac{1}{2\pi \times C2 \times R_{ESR}}$$

In this case (as shown in Figure 14), a third pole set by the compensation capacitor (C6) and the compensation resistor (R3) is used to compensate the effect of the ESR zero on the loop gain. This pole is located at:

$$f_{P3} = \frac{1}{2\pi \times C6 \times R3}$$

The goal of compensation design is to shape the converter transfer function to get a desired loop gain. The system crossover frequency where the feedback loop has the unity gain is important. Lower crossover frequencies result in slower line and load transient responses,while higher crossover frequencies could cause system instability. A good rule of thumb is to set the crossover frequency below one-tenth of the switching frequency.

To optimize the compensation components, the following procedure can be used.

1. Choose the compensation resistor (R3) to set the desired crossover frequency.

Determine the R3 value by the following equation:

$$R3 = \frac{2\pi \times C2 \times f_C}{G_{EA} \times G_{CS}} \times \frac{V_{OUT}}{V_{FB}} < \frac{2\pi \times C2 \times 0.1 \times f_S}{G_{EA} \times G_{CS}} \times \frac{V_{OUT}}{V_{FB}}$$

Where f_C is the desired crossover frequency which is typically below one tenth of the switching frequency.

2. Choose the compensation capacitor (C3) to achieve the desired phase margin. For applications with typical inductor values, setting the compensation zero, f_{Z1}, below one-forth of the crossover frequency provides sufficient phase margin.

Determine the C3 value by the following equation:

$$C3 > \frac{4}{2\pi \times R3 \times f_C}$$

Where R3 is the compensation resistor.

3. Determine if the second compensation capacitor (C6) is required. It is required if the ESR zero of the output capacitor is located at less than half of the switching frequency, or the following relationship is valid:

$$\frac{1}{2\pi \times C2 \times R_{ESR}} < \frac{f_S}{2}$$

If this is the case, then add the second compensation capacitor (C6) to set the pole f_{P3} at the location of the ESR zero. Determine the C6 value by the equation:

$$C6 = \frac{C2 \times R_{ESR}}{R3}$$

External Bootstrap Diode

An external bootstrap diode may enhance the efficiency of the regulator, the applicable conditions of external BST diode are:

- V_{OUT}=5V or 3.3V; and
- Duty cycle is high:

$$D = \frac{V_{OUT}}{V_{IN}} > 65\%$$

In these cases, an external BST diode is recommended from the output of the voltage regulator to BST pin, as shown in Fig.14

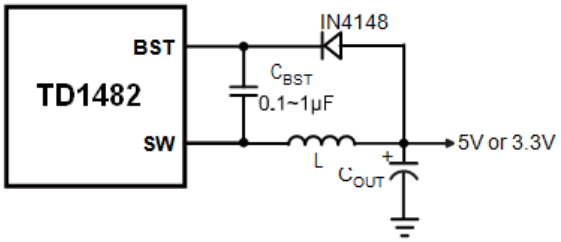

Figure18.Add Optional External Bootstrap Diode to Enhance Efficiency

The recommended external BST diode is IN4148, and the BST cap is 0.1~1μF.

Package Information

SOP8 Package Outline Dimensions

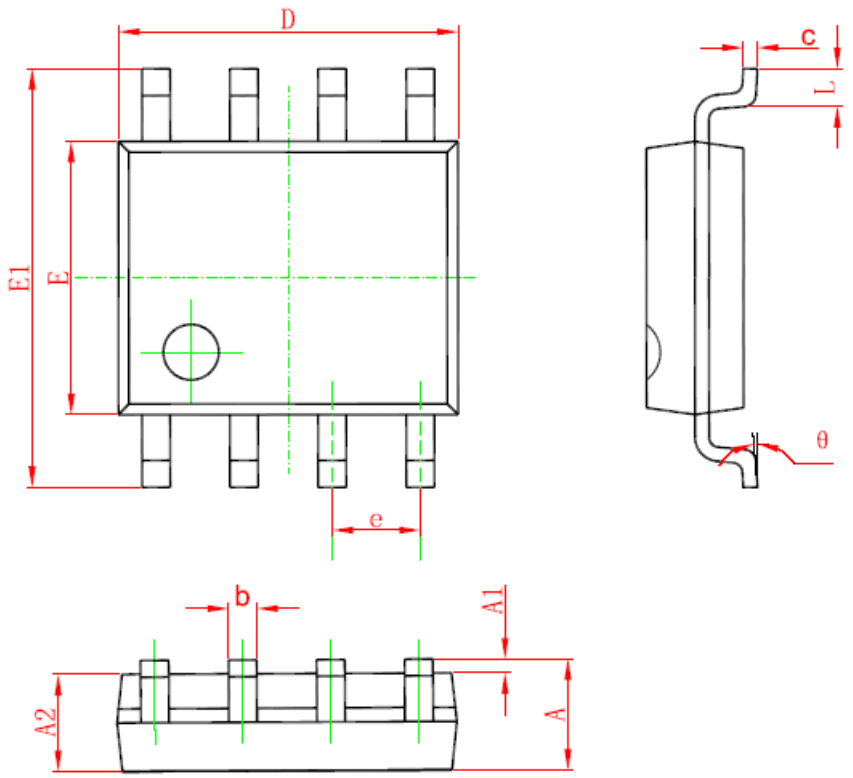

Symbol	Dimensions In Millimeters		Dimensions In Inches	
	Min	Max	Min	Max
A	1.350	1.750	0.053	0.069
A1	0.100	0.250	0.004	0.010
A2	1.350	1.550	0.053	0.061
b	0.330	0.510	0.013	0.020
c	0.170	0.250	0.006	0.010
D	4.700	5.100	0.185	0.200
E	3.800	4.000	0.150	0.157
E1	5.800	6.200	0.228	0.244
e	1.270(BSC)		0.050(BSC)	
L	0.400	1.270	0.016	0.050
θ	0°	8°	0°	8°

Design Notes

ENTEGRECİ

Bu belge www.entegreci.com üzerinden sunulmaktadır.

Elektronik komponent tedarikinde Entegreci

Entegreci, Eskişehir merkezli, Türkiye geneline satış yapan bir elektronik komponent mağazasıdır. Entegreler (IC), mikrodenetleyiciler, transistörler, diyotlar, pasif elemanlar, konnektörler, modüller ve geliştirme kartları tek adetten seri üretim adetlerine kadar satılır. Ürün sayfalarında güncel stok durumunu, fiyatı ve datasheet bağlantısını bulabilirsiniz.

Parça koduyla arama

Üretici parça numarasını yazın; stok ve fiyatı hemen görün.

www.entegreci.com

Ürün kategorileri

Entegreden kapasitöre tüm elektronik komponent kategorileri.

Kategorilere göz atın

Üreticiler

Aradığınız üreticinin ürünlerini tek sayfada inceleyin.

Üreticileri görün

Toplu alım ve teklif

Listede olmayan ya da yüksek adetli parçalar için teklif isteyin.

Teklif isteyin

www.entegreci.com | **destek@entegreci.com** | **0850 305 90 34**

Entegreci is an online electronic components store based in Türkiye. Search by manufacturer part number to see stock, prices and datasheets for integrated circuits, microcontrollers, transistors, passive components and connectors, or request a quote for parts that are not listed.

Bu sayfa Entegreci tarafından eklenmiştir. Belgenin önceki sayfaları asıl yayıncısına aittir ve içeriği değiştirilmemiştir; en güncel sürüm için belgenin yayıncısına başvurun.