TL431
TL432

Automotive adjustable voltage reference

Datasheet - production data



Z
TO-92
(Plastic package)

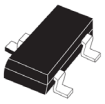

L
SOT23-3

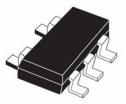

L
SOT23-5

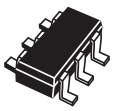

C
SOT323-6

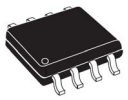

D
SO-8
(Batwing plastic micropackage)

Features



- AEC-Q100 qualified
- Adjustable output voltage: 2.5 to 36 V
- Sink current capability: 1 to 100 mA
- Typical output impedance: 0.22 Ω
- 1% and 2% voltage precision
- Automotive temp. range -40 °C to +125 °C

Applications

- Power supply
- Industrial
- Automotive

Description

The TL431 and TL432 are adjustable shunt voltage references with guaranteed temperature stability over the entire operating temperature range. The device temperature range is extended for the automotive version from -40 °C up to +125 °C. The output voltage can be set to any value between 2.5 and 36 V with two external resistors. The TL431 and TL432 operate with a wide current range from 1 to 100 mA with a typical dynamic impedance of 0.22 Ω.

This is information on a product in full production. www.st.com

Contents

1 Schematic diagrams 3

2 Absolute maximum ratings and operating conditions 4

3 Electrical characteristics 5

Reference input voltage deviation over temperature range 7

4 Package information 11

4.1 SO-8 package information 12

4.2 TO-92 ammopack and tape and reel package information 13

4.3 TO-92 (bulk) package information 14

4.4 SOT23-3 package information 15

4.5 SOT23-5 package information 16

4.6 SOT323-6 package information 17

5 Ordering information 18

6 Revision history 20

1 Schematic diagrams

Figure 1. TO-92 pin connections (top view)

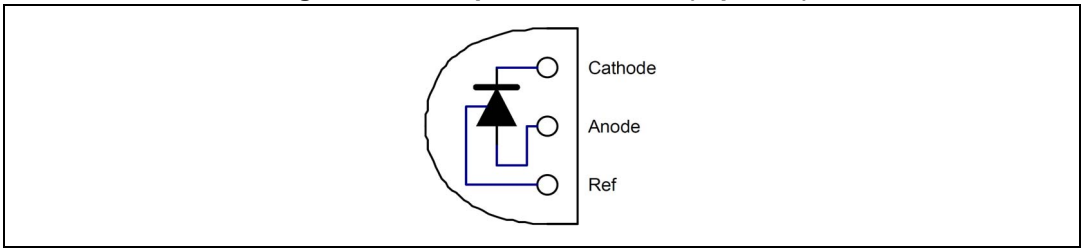

Figure 2. SO-8 batwing pin connections (top view)

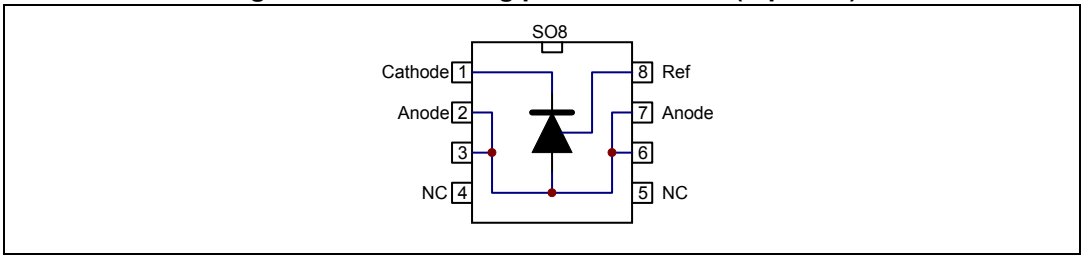

Figure 3. SOT23-5 and SOT23-3 pin connections (top view)

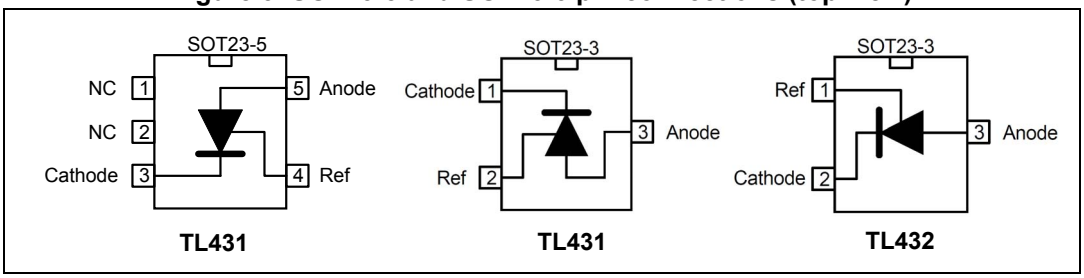

Figure 4. SOT323-6 pin connections (top view)

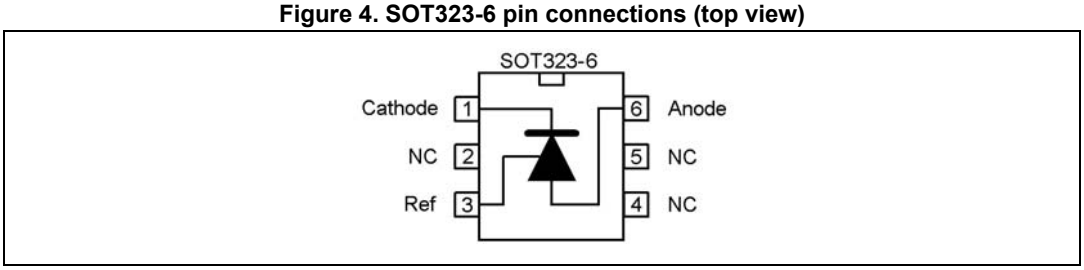

Figure 5. TL431 and TL432 block diagram

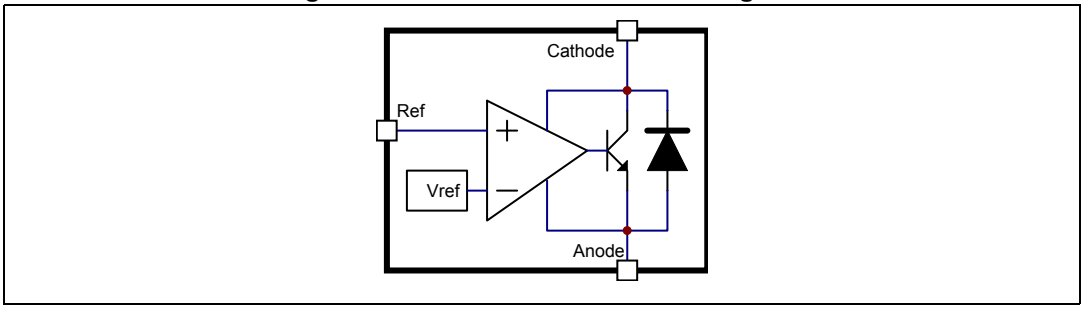

2 Absolute maximum ratings and operating conditions

Table 1. Absolute maximum ratings

Symbol	Parameter	Value	Unit
V_{KA}	Cathode to anode voltage	37	V
I_k	Continuous cathode current range	-100 to +150	mA
I_{ref}	Reference input current range	-0.05 to +10	mA
R_{thjc}	Thermal resistance junction to case TO-92 SO-8 batwing SOT23-3L SOT23-5L SOT323-6L	 57 30 136 67 110	°C/W
R_{thja}	Thermal resistance junction to ambient TO-92 SO-8 batwing SOT23-3L SOT23-5L SOT323-6L	 200 85 248 157 221	°C/W
T_{stg}	Storage temperature range	-65 to +150	°C
T_J	Junction temperature	150	°C
ESD	TL431IY, TL431AIY-T: HBM (human body model)(1) TL431-TL432: HBM (human body model) MM: machine model(2) CDM: charged device model(3)	3000 2000 200 1500	V

1. Human body model: a 100 pF capacitor is charged to the specified voltage, then discharged through a 1.5 kΩ resistor between two pins of the device. This is done for all couples of connected pin combinations while the other pins are floating.
2. Machine model: a 200 pF capacitor is charged to the specified voltage, then discharged directly between two pins of the device with no external series resistor (internal resistor < 5 Ω). This is done for all couples of connected pin combinations while the other pins are floating.
3. Charged device model: all pins and the package are charged together to the specified voltage and then discharged directly to the ground through only one pin. This is done for all pins.

Table 2. Operating conditions

Symbol	Parameter	Value	Unit
V_{KA}	Cathode to anode voltage	V_{ref} to 36	V
I_k	Cathode current	1 to 100	mA
T_{oper}	Operating free-air temperature range TL431C/AC TL431I/AI - TL432I/AI TL431IY/AIY	 0 to +70 -40 to +105 -40 to +125	°C

3 Electrical characteristics

Table 3. TL431C (T_{amb} = 25 °C unless otherwise specified)

Symbol	Parameter	TL431C			TL431AC			Unit
		Min.	Typ.	Max.	Min.	Typ.	Max.	
V_{ref}	Reference input voltage $V_{KA} = V_{ref}$, I_k = 10 mA, T_{amb} = 25 °C $T_{min} \leq T_{amb} \leq T_{max}$	2.44 2.423	2.495 -	2.55 2.567	2.47 2.453	2.495 -	2.52 2.537	V
ΔV_{ref}	Reference input voltage deviation overtemperature range (1) $V_{KA} = V_{ref}$, I_k = 10 mA, $T_{min} \leq T_{amb} \leq T_{max}$	-	3	17	-	3	15	mV
$\frac{\Delta Vref}{\Delta Vka}$	Ratio of change in reference input voltage to change in cathode to anode voltage I_k = 10 mA - ΔV_{KA} = 10 V to V_{ref} ΔV_{KA} = 36 V to 10 V	-2.7 -2	-1.4 -1	- -	-2.7 -2	-1.4 -1	- -	mV/V
I_{ref}	Reference input current I_k = 10 mA, R1 = 10 kΩ, R2 = ∞ T_{amb} = 25 °C $T_{min} \leq T_{amb} \leq T_{max}$	- -	1.8 -	4 5.2	- -	1.8 -	4 5.2	µA
ΔI_{ref}	Reference input current deviation overtemperature range I_k = 10 mA, R1 = 10 kΩ, R2 =∞ $T_{min} \leq T_{amb} \leq T_{max}$	-	0.4	1.2	-	0.4	1.2	µA
I_{min}	Minimum cathode current for regulation $V_{KA} = V_{ref}$	-	0.5	1	-	0.5	0.6	mA
I_{off}	Off-state cathode current	-	2.6	1000	-	2.6	1000	nA
$\lvert ZKA \rvert$	Dynamic impedance(2) $V_{KA} = V_{ref}$, ΔI_k = 1 to 100 mA, f ≤ 1 kHZ	-	0.22	0.5	-	0.22	0.5	Ω

1. See definition of *Section : Reference input voltage deviation overtemperature range*.
2. The dynamic impedance is defined as $\lvert ZKA \rvert = \frac{\Delta V_{KA}}{\Delta I_k}$

Table 4. TL431I/TL432I (T_{amb} = 25 °C unless otherwise specified)

Symbol	Parameter	TL431I/TL432I			TL431AI/TL432AI			Unit
		Min.	Typ.	Max.	Min.	Typ.	Max.	
V_{ref}	Reference input voltage $V_{KA} = V_{ref}$, I_k = 10 mA, T_{amb} = 25 °C $T_{min} \leq T_{amb} \leq T_{max}$	2.44 2.41	2.495 -	2.55 2.58	2.47 2.44	2.495 -	2.52 2.55	V
ΔV_{ref}	Reference input voltage deviation overtemperature range (1) $V_{KA} = V_{ref}$, I_k =10 mA, $T_{min} \leq T_{amb} \leq T_{max}$	-	7	30	-	7	30	mV
$\frac{\Delta Vref}{\Delta Vka}$	Ratio of change in reference input voltage to change in cathode to anode voltage I_k = 10 mA, ΔV_{KA} = 10 V to V_{ref} ΔV_{KA} = 36 V to 10 V	-2.7 -2	-1.4 -1	- -	-2.7 -2	-1.4 -1	- -	mV/V
I_{ref}	Reference input current I_k = 10 mA, R1 = 10 kΩ, R2 = ∞ T_{amb} = 25 °C $T_{min} \leq T_{amb} \leq T_{max}$	- -	1.8 -	4 6.5	- -	1.8 -	4 6.5	µA
ΔI_{ref}	Reference input current deviation overtemperature range I_k = 10 mA, R1 = 10 kΩ, R2 = ∞ $T_{min} \leq T_{amb} \leq T_{max}$	-	0.8	2.5	-	0.8	1.2	µA
I_{min}	Minimum cathode current for regulation $V_{KA} = V_{ref}$	-	0.5	1	-	0.5	0.7	mA
I_{off}	Off-state cathode current	-	2.6	1000	-	2.6	1000	nA
$\lvert ZKA \rvert$	Dynamic impedance(2) $V_{KA} = V_{ref}$, ΔI_k = 1 to 100 mA, f ≤ 1 kHZ	-	0.22	0.5	-	0.22	0.5	Ω

1. See definition of *Section : Reference input voltage deviation overtemperature range* below.
2. The dynamic impedance is defined as $\lvert ZKA \rvert = \frac{\Delta V_{KA}}{\Delta I_k}$

Table 5. TL431IY (T_{amb} = 25 °C unless otherwise specified)

Symbol	Parameter	TL431IY			TL431AIY			Unit
		Min.	Typ.	Max.	Min.	Typ.	Max.	
V_{ref}	Reference input voltage $V_{KA} = V_{ref}$, I_k = 10 mA $T_{min} \leq T_{amb} \leq T_{max}$	2.44 2.41	2.495 -	2.55 2.58	2.47 2.44	2.495 -	2.52 2.55	V
ΔV_{ref}	Reference input voltage deviation overtemperature range(1) $V_{KA} = V_{ref}$, I_k = 10 mA, $T_{min} \leq T_{amb} \leq T_{max}$	-	7	30	-	7	30	mV
$\frac{\Delta Vref}{\Delta Vka}$	Ratio of change in reference input voltage to change in cathode to anode voltage I_k = 10 mA, ΔV_{KA} = 10 V to V_{ref} I_k = 10 mA, ΔV_{KA} = 36 V to 10 V	-2.7 -2	-1.4 -1	- -	-2.7 -2	-1.4 -1	- -	mV/V
I_{ref}	Reference input current I_k = 10 mA, R1 = 10 kΩ, R2 = ∞ $T_{min} \leq T_{amb} \leq T_{max}$	- -	1.8 -	4 6.5	- -	1.8 -	4 6.5	µA
ΔI_{ref}	Reference input current deviation overtemperature range I_k = 10 mA, R1 = 10 kΩ, R2 = ∞, $T_{min} \leq T_{amb} \leq T_{max}$	-	0.8	2.5	-	0.8	1.2	µA
I_{min}	Minimum cathode current for regulation $V_{KA} = V_{ref}$	-	0.5	1	-	0.5	0.6	mA
I_{off}	Off-state cathode current $T_{min} \leq T_{amb} \leq T_{max}$	- -	2.6	1000 3000	- -	2.6	1000 3000	nA
$\lvert ZKA \rvert$	Dynamic impedance(2) $V_{KA} = V_{ref}$, ΔI_k = 1 to 100 mA, F ≤ 1 kHz	-	0.22	0.5	-	0.22	0.5	Ω

1. See definition of *Section : Reference input voltage deviation overtemperature range* below.
2. The dynamic impedance is defined as $\lvert ZKA \rvert = \frac{\Delta V_{KA}}{\Delta I_k}$

Reference input voltage deviation overtemperature range

ΔV_{ref} is defined as the difference between the maximum and minimum values obtained over the full temperature range.

$$\Delta V_{ref} = V_{ref\ max} - V_{ref\ min}$$

Figure 6. Reference input voltage deviation overtemperature range

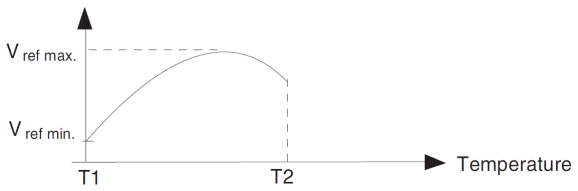

Figure 7. Test circuit for $V_{KA} = V_{ref}$

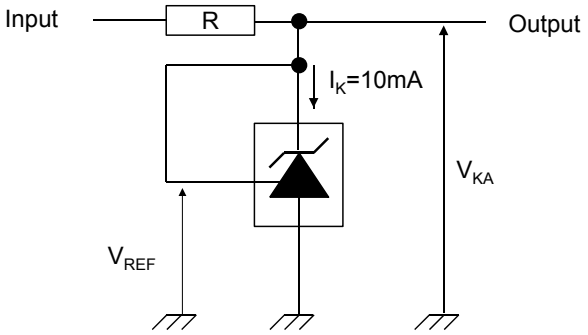

Figure 8. Test circuit for programming mode

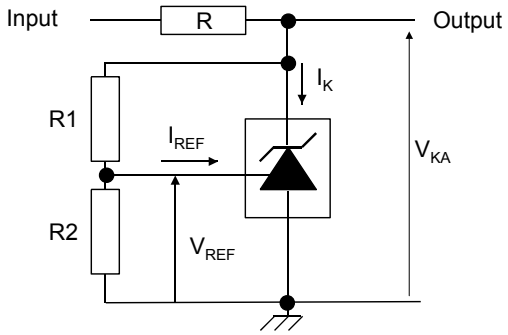

$$V_{KA} = V_{REF}\left(1 + \frac{R1}{R2}\right) + R1 \times I_{REF}$$

Figure 9. Test circuit for I_{off}

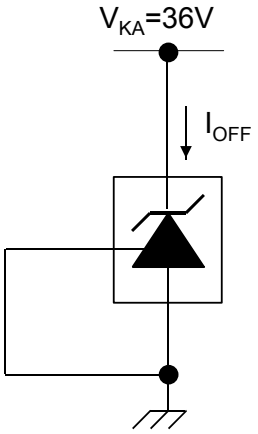

Figure 10. Test circuit for phase margin and voltage gain

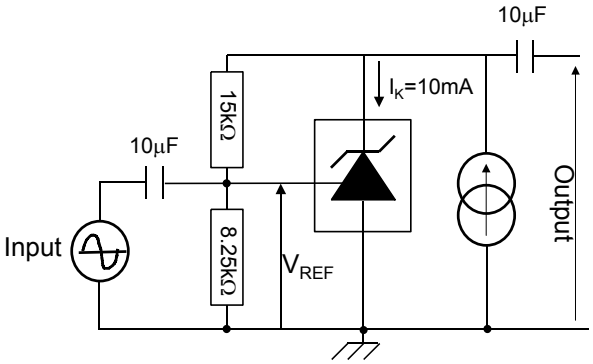

Figure 11. Test circuit for response time

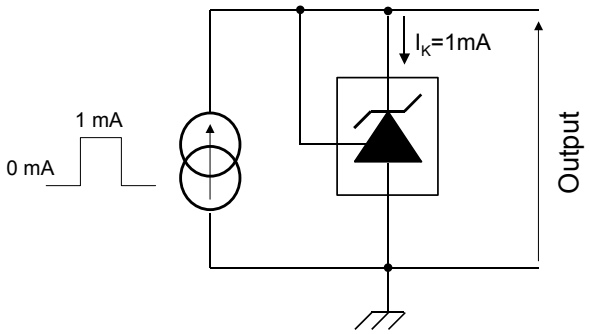

Figure 12. Reference voltage vs. temperature

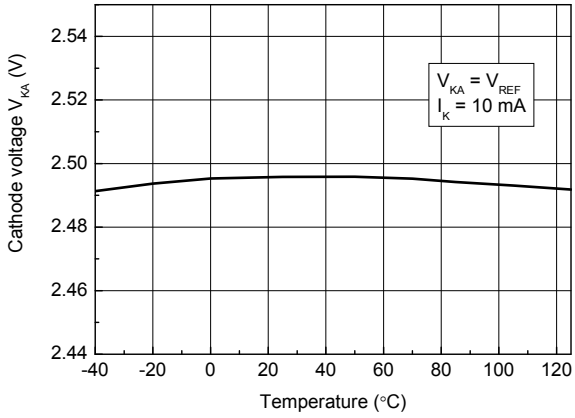

Figure 13. Reference voltage vs. cathode current

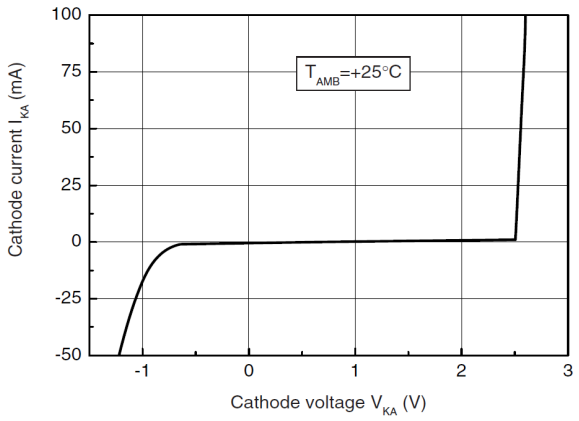

Figure 14. Zoom on reference voltage vs. cathode current

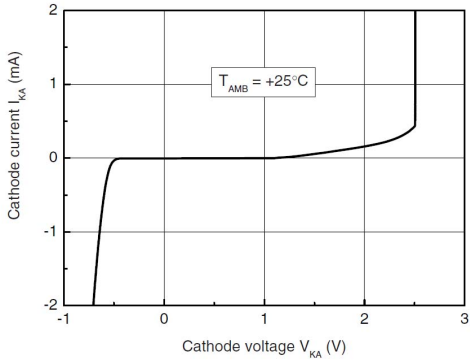

Figure 15. Reference current vs. temperature

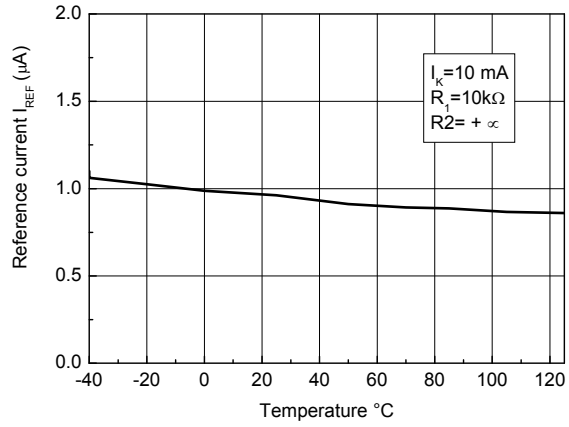

Figure 16. Off-state cathode current vs. temperature

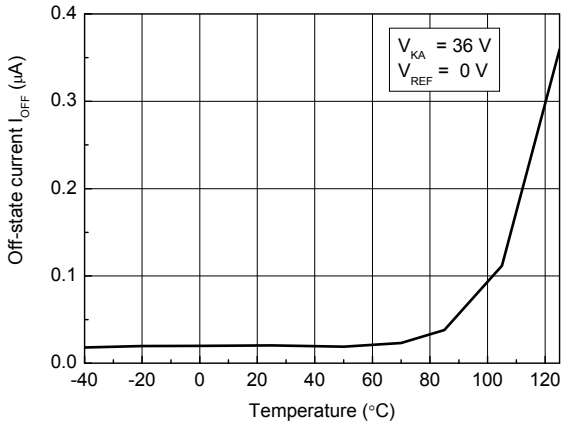

Figure 17. Ratio of change in V_{ref} to change in V_{KA} vs. temperature

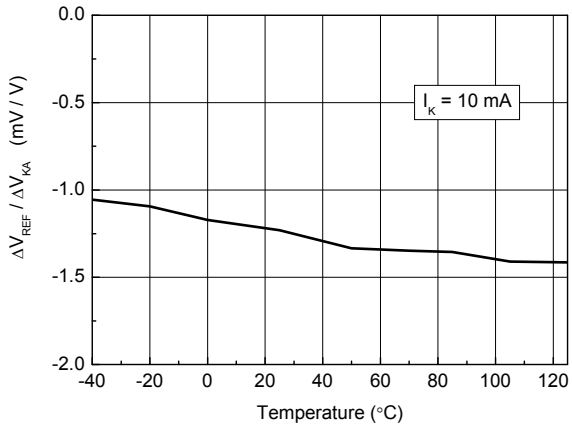

Figure 18. Static impedance R_{KA} vs. temperature

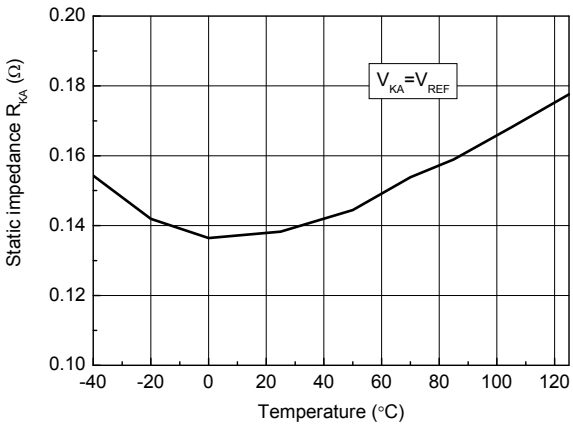

Figure 19. Minimum operating current vs. temperature

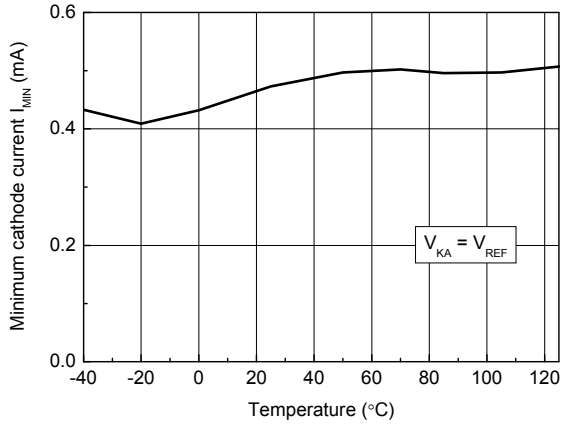

Figure 20. Gain and phase vs. frequency

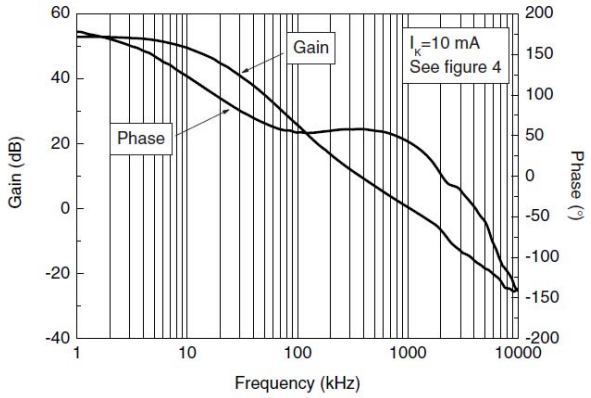

Figure 21. Stability behavior with capacitive loads

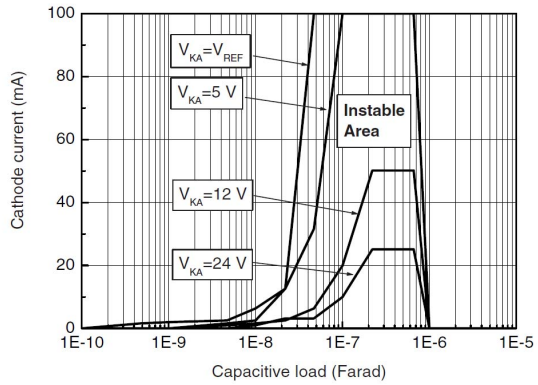

Figure 22. Maximum power dissipation

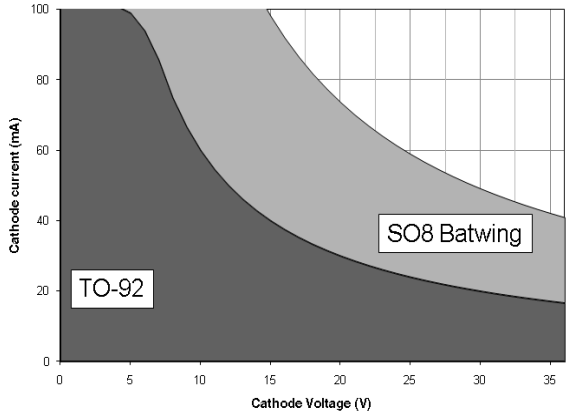

Figure 23. Pulse response for I_k = 1 mA

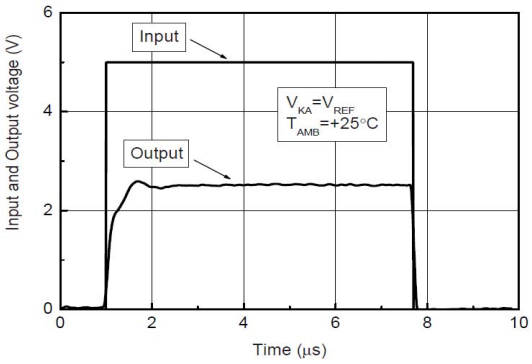

4 Package information

In order to meet environmental requirements, ST offers these devices in different grades of ECOPACK® packages, depending on their level of environmental compliance. ECOPACK® specifications, grade definitions and product status are available at: *www.st.com*.
ECOPACK® is an ST trademark.

4.1 SO-8 package information

Figure 24. SO-8 package outline

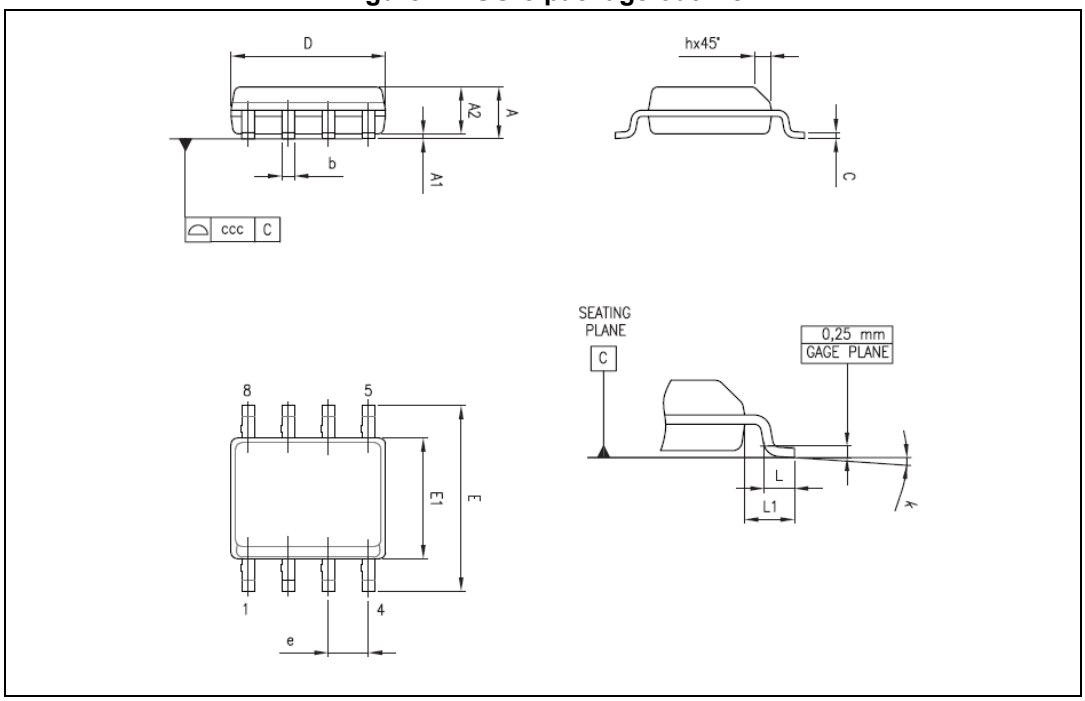

Table 6. SO-8 package mechanical data

Symbol	Dimensions					
	Millimeters			Inches		
	Min.	Typ.	Max.	Min.	Typ.	Max.
A		-	1.75	-	-	0.069
A1	0.10	-	0.25	0.004	-	0.010
A2	1.25	-	-	0.049	-	-
b	0.28	-	0.48	0.011	-	0.019
c	0.17	-	0.23	0.007	-	0.010
D	4.80	4.90	5.00	0.189	0.193	0.197
E	5.80	6.00	6.20	0.228	0.236	0.244
E1	3.80	3.90	4.00	0.150	0.154	0.157
e	-	1.27	-	-	0.050	-
h	0.25	-	0.50	0.010	-	0.020
L	0.40	-	1.27	0.016	-	0.050
L1	-	1.04	-	-	0.040	-
k	0°	-	8°	0°	-	8°
ccc	-	-	0.10	-	-	0.004

4.2 TO-92 ammopack and tape and reel package information

Figure 25. TO-92 ammopack and tape and reel package outline

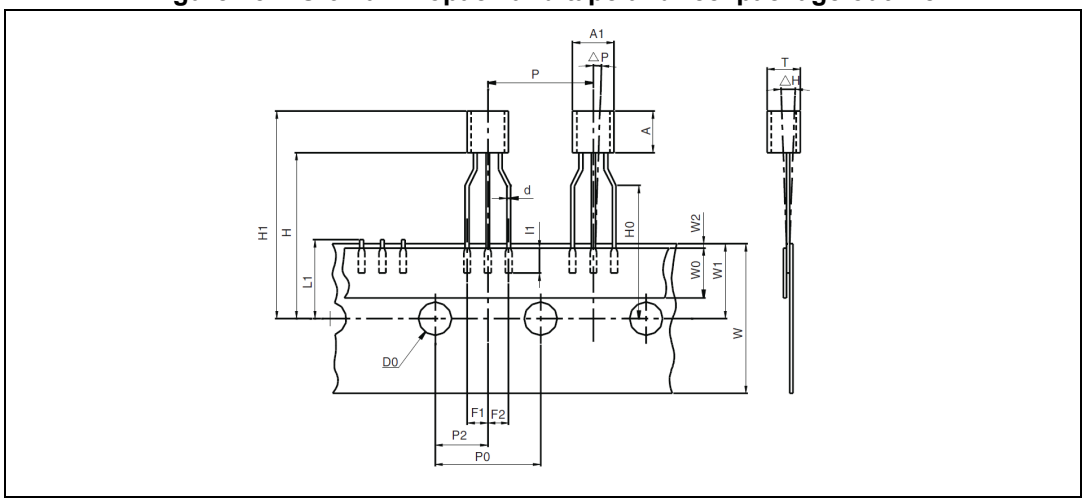

Table 7. TO-92 ammopack and tape and reel package mechanical data

Symbol	Dimension (millimeters)			Dimension (Inches)		
	Min.	Typ.	Max.	Min.	Typ.	Max.
A1	-	-	5.0	-	-	0.197
A	-	-	5.0	-	-	0.197
T	-	-	4.0	-	-	0.157
d	-	0.45	-	-	0.018	-
I1	2.5	-	-	0.098	-	-
P	11.7	12.7	13.7	0.461	0.500	0.539
PO	12.4	12.7	13	0.488	0.500	0.512
P2	5.95	6.35	6.75	0.234	0.250	0.266
F1/F2	2.4	2.5	2.8	0.094	0.098	0.110
Δh	-1	0	1	-0.039	0	0.039
ΔP	-1	0	1	-0.039	0	0.039
W	17.5	18.0	19.0	0.689	0.709	0.748
W0	5.7	6	6.3	0.224	0.236	0.248
W1	8.5	9	9.75	0.335	0.354	0.384
W2	-	-	0.5	-	-	0.020
H	-	-	20	-	-	0.787
H0	15.5	16	16.5	0.610	0.630	0.650
H1	-	-	25	-	-	0.984
DO	3.8	4.0	4.2	0.150	0.157	0.165
L1	-	-	11	-	-	0.433

4.3 TO-92 (bulk) package information

Figure 26. TO-92 bulk package outline

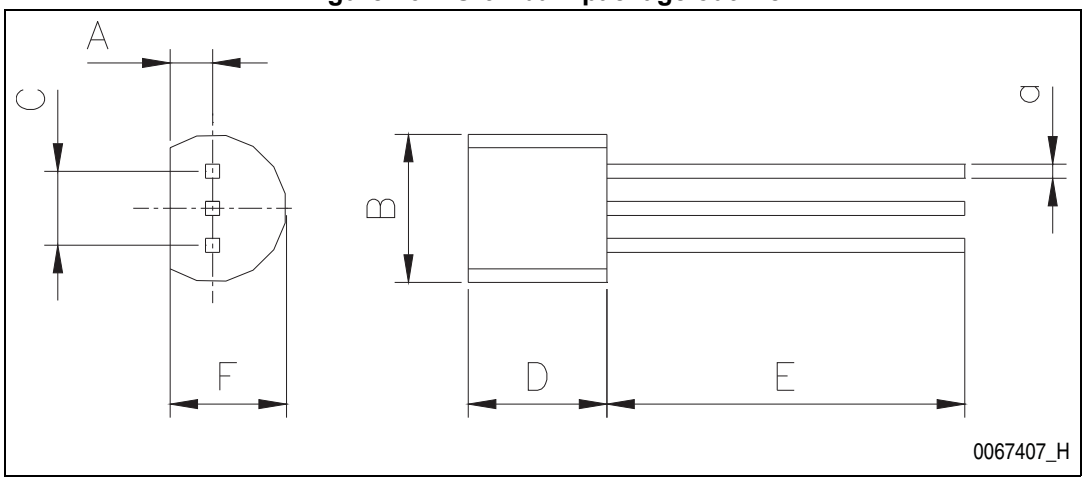

Table 8. TO-92 bulk package mechanical data

Symbol	Dimension (millimeters)			Dimension (Inches)		
	Min.	Typ.	Max.	Min.	Typ.	Max.
A	-	1.35	-	-	0.053	-
B	-	-	4.70	-	-	0.185
C	-	2.54	-	-	0.100	-
D	4.40	-	-	0.173	-	-
E	12.70	-	-	0.500	-	-
F	-	-	3.70	-	-	0.146
a	-	-	0.5	-	-	0.019

4.4 SOT23-3 package information

Figure 27. SOT23-3 package outline

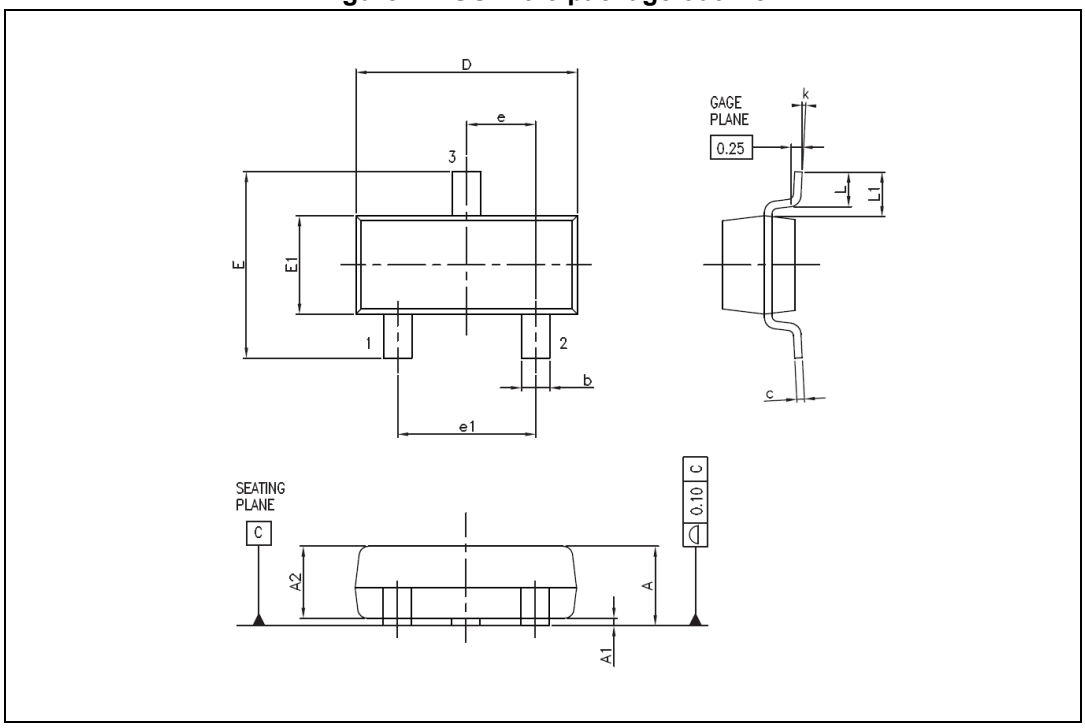

Table 9. SOT23-3 package mechanical data

Symbol	Dimensions					
	Millimeters			Inches		
	Min.	Typ.	Max.	Min.	Typ.	Max.
A	0.89	-	1.12	0.035	-	0.044
A1	0.01	-	0.10	0.0004	-	0.004
A2	0.88	0.95	1.02	0.035	0.037	0.040
b	0.30	-	0.50	0.012	-	0.020
c	0.08	-	0.20	0.003	-	0.008
D	2.80	2.90	3.04	0.110	0.114	0.120
E	2.10	-	2.64	0.083	-	0.104
E1	1.20	1.30	1.40	0.047	0.051	0.055
e	-	0.95	-	-	0.037	-
e1	-	1.90	-	-	0.075	-
L	0.40	0.50	0.60	0.016	0.020	0.024
L1	-	0.54	-	-	0.021	-
k	0d	-	8d	-	-	-

4.5 SOT23-5 package information

Figure 28. SOT23-5 package outline

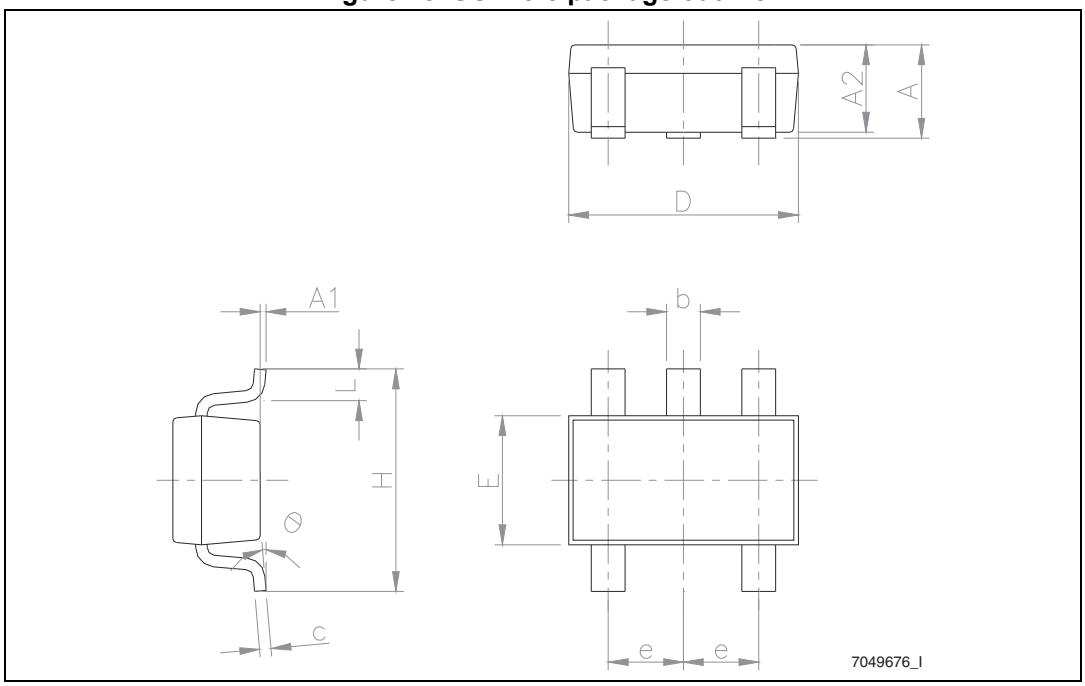

Table 10. SOT23-5 package mechanical data

Symbol	Dimensions					
	Millimeters			Inches		
	Min.	Typ.	Max.	Min.	Typ.	Max.
A	0.90	-	1.45	0.035	-	0.057
A1	-	-	0.15	-	-	0.006
A2	0.90	-	1.30	0.035	-	0.051
b	0.35	-	0.50	0.014	-	0.020
c	0.09	-	0.20	0.004	-	0.008
D	2.80	-	3.05	0.110	-	0.120
E	1.50	-	1.75	0.059	-	0.069
e	-	0.95	-	-	0.037	-
H	2.60	-	3.00	0.102	-	0.118
L	0.10	-	0.60	0.004	-	0.024
θ	0 degrees	-	10 degrees	-	-	-

4.6 SOT323-6 package information

Figure 29. SOT323-6 package outline

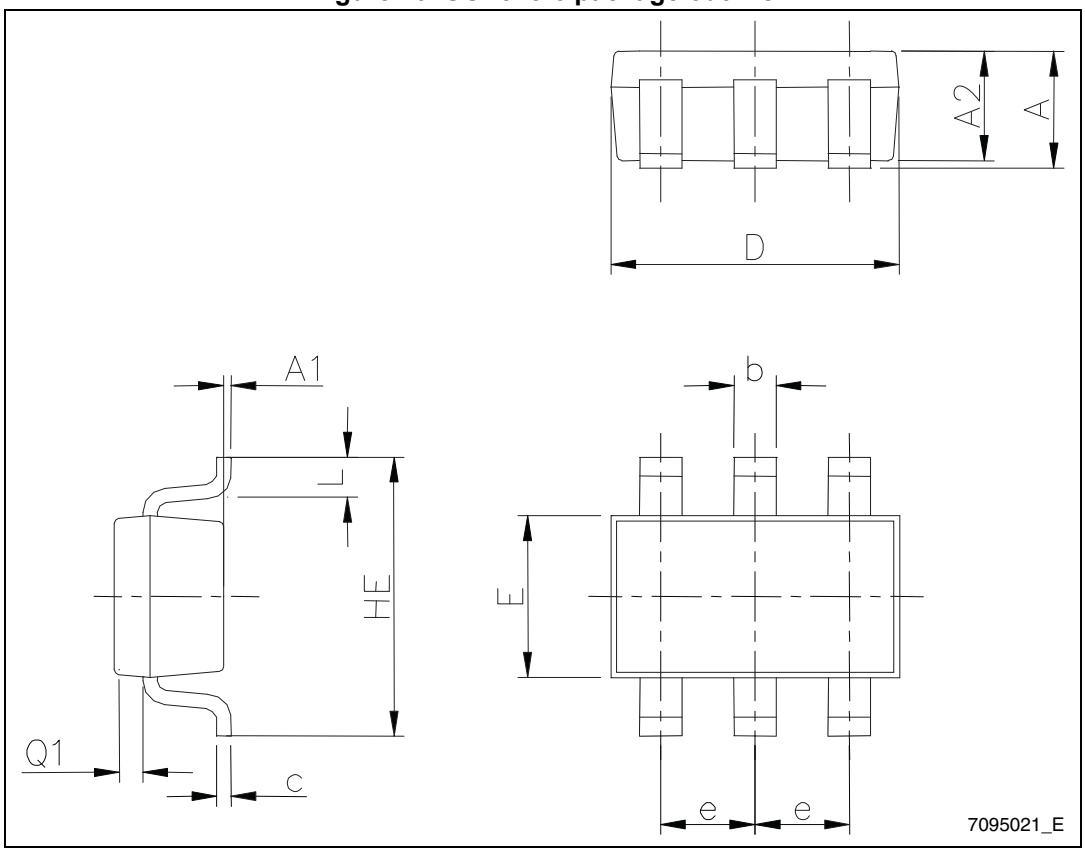

Table 11. SOT323-6 package mechanical data

Symbol	Dimensions					
	Millimeters			Inches		
	Min.	Typ.	Max.	Min.	Typ.	Max.
A	0.80	-	1.10	0.031	-	0.043
A1	0	-	0.10	-	-	0.004
A2	0.80	-	1.00	0.031	-	0.039
b	0.15	-	0.30	0.006	-	0.012
c	0.10	-	0.18	0.004	-	0.007
D	1.80	-	2.20	0.071	-	0.087
E	1.15	-	1.35	0.045	-	0.053
e	-	0.65	-	-	0.026	-
HE	1.80	-	2.40	0.071	-	0.094
L	0.10	-	0.40	0.004	-	0.016
Q1	0.10	-	0.40	0.004	-	0.016

5 Ordering information

Table 12. Order codes

Order code	Accuracy (%)	Temperature range	Package	Packing	Marking
TL431CD TL431CDT	2	0 °C to +70 °C	SO-8	Tube or Tape and reel	431C
TL431ACD TL431ACDT	1				431AC
TL431CZ TL431CZT TL431CZ-AP	2		TO-92	Bulk or Tape or Ammopack	TL431C
TL431ACZ TL431ACZT TL431ACZ-AP	1				TL431AC
TL431CL3T	2		SOT23-3	Tape	L19
TL431ACL3T	1				L18
TL431CL5T	2		SOT23-5		L19
TL431ACL5T	1				L18
TL431CCT	2		SOT323-6		31C
TL431ACCT	1				31C
TL431ID TL431IDT	2	-40 °C to + 105 °C	SO-8	Tube or tape and reel	431I
TL431AID TL431AIDT	1				431AI
TL431IZ TL431IZT TL431IZ-AP	2		TO-92	Bulk or Tape or Ammopack	TL431I
TL431AIZ TL431AIZT TL431AIZ-AP	1				TL431AI
TL431IL3T	2		SOT23-3	Tape	L17
TL431AIL3T	1				L16
TL432IL3T	2		SOT23-3		32I
TL432AIL3T	1				32AI
TL431IL5T	2		SOT23-5		L17
TL431AIL5T	1				L16
TL431ICT	2		SOT323-6		31I
TL431AICT	1				31I

Table 12. Order codes (continued)

Order code	Accuracy (%)	Temperature range	Package	Packing	Marking
TL431IYD(1) TL431IYDT(1)	2	-40 °C to + 125 °C	SO-8 (Automotive grade level)	Tube or tape and reel	431IY
TL431AIYD(1) TL431AIYDT(1)	1				431AIY

1. Qualification and characterization according to AEC Q100 and Q003 or equivalent, advanced screening according to AEC Q001 and Q 002 or equivalent.

6 Revision history

Table 13. Document revision history

Date	Revision	Changes
01-Mar-2002	1	Initial release.
01-Nov-2005	2	PPAP references inserted in order codes table on cover page.
13-Dec-2006	3	Corrected TO-92 package information.
08-Jun-2007	4	Specified that SO-8 package is batwing package. In electrical characteristics tables, moved negative values from max column to min column. Corrected captions of *Figure 7* and of *Figure 18*. Added footnote to *Table 8: TO-92 bulk package mechanical data*.
25-Feb-2008	5	Corrected SO-8 package mechanical data. Corrected footnote for automotive grade order codes in order code table. Corrected packing information for TO-92 devices in order code table.
04-Jun-2009	6	Changed I_{MIN} to 0.6 mA in *Table 3* and *Table 4*. Increased temperature range to 125°C in temperature curves. Added *Table 5*, dedicated to automotive version. Increased high temperature for automotive range up to +125 °C in *Table 5* and in *Table 12: Order codes*. Inserted accuracy column in *Table 12*.
09-Jun-2009	7	Corrected minor error in package column in *Table 12*.
14-Mar-2011	8	Added *Figure 3 on page 3*, *Section 4.4 on page 15* and *Section 4.5 on page 16*.
07-Oct-2011	9	Added new package mechanical data *Table 11 on page 17* and *Figure 29 on page 17*. Updated *Table 12 on page 18*.
17-Nov-2011	10	Added new part number TL432, new order code *Table 12 on page 18* and pin connection for TL432 *Figure 3 on page 3*.
03-Dec-2012	11	Removed temperature range in title *Table 3 on page 5*, *Table 4 on page 6* and *Table 5 on page 7*.
07-Dec-2017	12	Updated main title *on page 1* and *Section : Features on page 1*, (added “automotive” - AEC-Q100 qualified). Updated *Table 1 on page 4* (updated R_{thja} and R_{thjc}). Minor modifications throughout document.

IMPORTANT NOTICE – PLEASE READ CAREFULLY

STMicroelectronics NV and its subsidiaries (“ST”) reserve the right to make changes, corrections, enhancements, modifications, and improvements to ST products and/or to this document at any time without notice. Purchasers should obtain the latest relevant information on ST products before placing orders. ST products are sold pursuant to ST’s terms and conditions of sale in place at the time of order acknowledgement.

Purchasers are solely responsible for the choice, selection, and use of ST products and ST assumes no liability for application assistance or the design of Purchasers’ products.

No license, express or implied, to any intellectual property right is granted by ST herein.

Resale of ST products with provisions different from the information set forth herein shall void any warranty granted by ST for such product.

ST and the ST logo are trademarks of ST. All other product or service names are the property of their respective owners.

Information in this document supersedes and replaces information previously supplied in any prior versions of this document.

© 2017 STMicroelectronics – All rights reserved

ENTEGRECİ

Bu belge www.entegreci.com üzerinden sunulmaktadır.

Elektronik komponent tedarikinde Entegreci

Entegreci, Eskişehir merkezli, Türkiye geneline satış yapan bir elektronik komponent mağazasıdır. Entegreler (IC), mikrodenetleyiciler, transistörler, diyotlar, pasif elemanlar, konnektörler, modüller ve geliştirme kartları tek adetten seri üretim adetlerine kadar satılır. Ürün sayfalarında güncel stok durumunu, fiyatı ve datasheet bağlantısını bulabilirsiniz.

Parça koduyla arama

Üretici parça numarasını yazın; stok ve fiyatı hemen görün.

www.entegreci.com

Ürün kategorileri

Entegreden kapasitöre tüm elektronik komponent kategorileri.

Kategorilere göz atın

Üreticiler

Aradığınız üreticinin ürünlerini tek sayfada inceleyin.

Üreticileri görün

Toplu alım ve teklif

Listede olmayan ya da yüksek adetli parçalar için teklif isteyin.

Teklif isteyin

www.entegreci.com | **destek@entegreci.com** | **0850 305 90 34**

Entegreci is an online electronic components store based in Türkiye. Search by manufacturer part number to see stock, prices and datasheets for integrated circuits, microcontrollers, transistors, passive components and connectors, or request a quote for parts that are not listed.

Bu sayfa Entegreci tarafından eklenmiştir. Belgenin önceki sayfaları asıl yayıncısına aittir ve içeriği değiştirilmemiştir; en güncel sürüm için belgenin yayıncısına başvurun.