# DATA SHEET

For a complete data sheet, please also download:

- The IC04 LOCMOS HE4000B Logic Family Specifications HEF, HEC
- The IC04 LOCMOS HE4000B Logic Package Outlines/Information HEF, HEC

# HEF4060B
# MSI
## 14-stage ripple-carry binary counter/divider and oscillator

Product specification
File under Integrated Circuits, IC04

January 1995

Philips Semiconductors

PHILIPS

# 14-stage ripple-carry binary counter/divider and oscillator

# HEF4060B MSI

## DESCRIPTION

The HEF4060B is a 14-stage ripple-carry binary counter/divider and oscillator with three oscillator terminals (RS, $R_{TC}$ and $C_{TC}$), ten buffered outputs ($O_3$ to $O_9$ and $O_{11}$ to $O_{13}$) and an overriding asynchronous master reset input (MR). The oscillator configuration allows design of either RC or crystal oscillator circuits. The oscillator may be replaced by an external clock signal at input RS. The counter advances on the negative-going transition of RS. A HIGH level on MR resets the counter ($O_3$ to $O_9$ and $O_{11}$ to $O_{13}$ = LOW), independent of other input conditions.

Schmitt-trigger action in the clock input makes the circuit highly tolerant to slower clock rise and fall times.

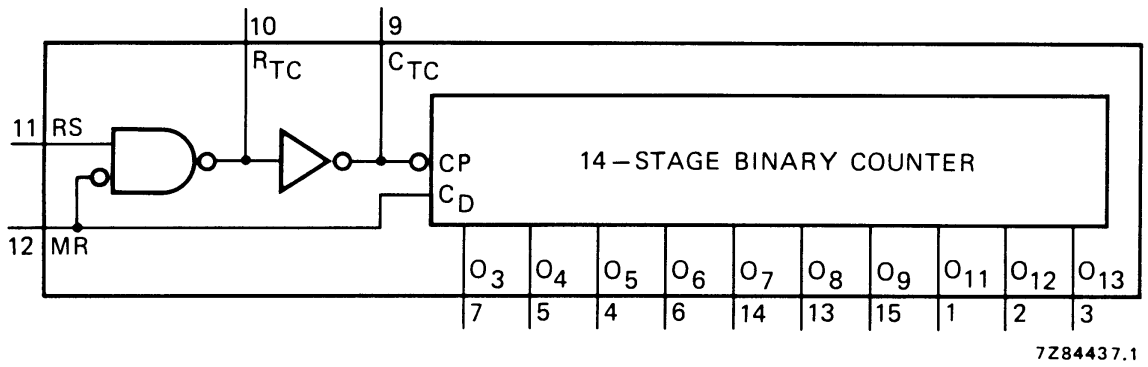


Fig.1 Functional diagram.

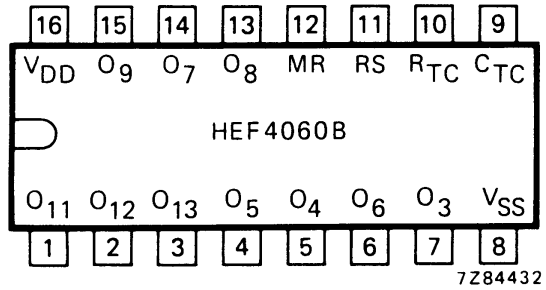


Fig.2 Pinning diagram.

## PINNING

| | |
|---|---|
| MR | master reset |
| RS | clock input/oscillator pin |
| $R_{TC}$ | oscillator pin |
| $C_{TC}$ | external capacitor connection |
| $O_3$ to $O_9$<br>$O_{11}$ to $O_{13}$ | counter outputs |

HEF4060BP(N): 16-lead DIL; plastic (SOT38-1)
HEF4060BD(F): 16-lead DIL; ceramic (cerdip) (SOT74)
HEF4060BT(D): 16-lead SO; plastic (SOT109-1)
( ): Package Designator North America

## FAMILY DATA, $I_{DD}$ LIMITS category MSI

See Family Specifications

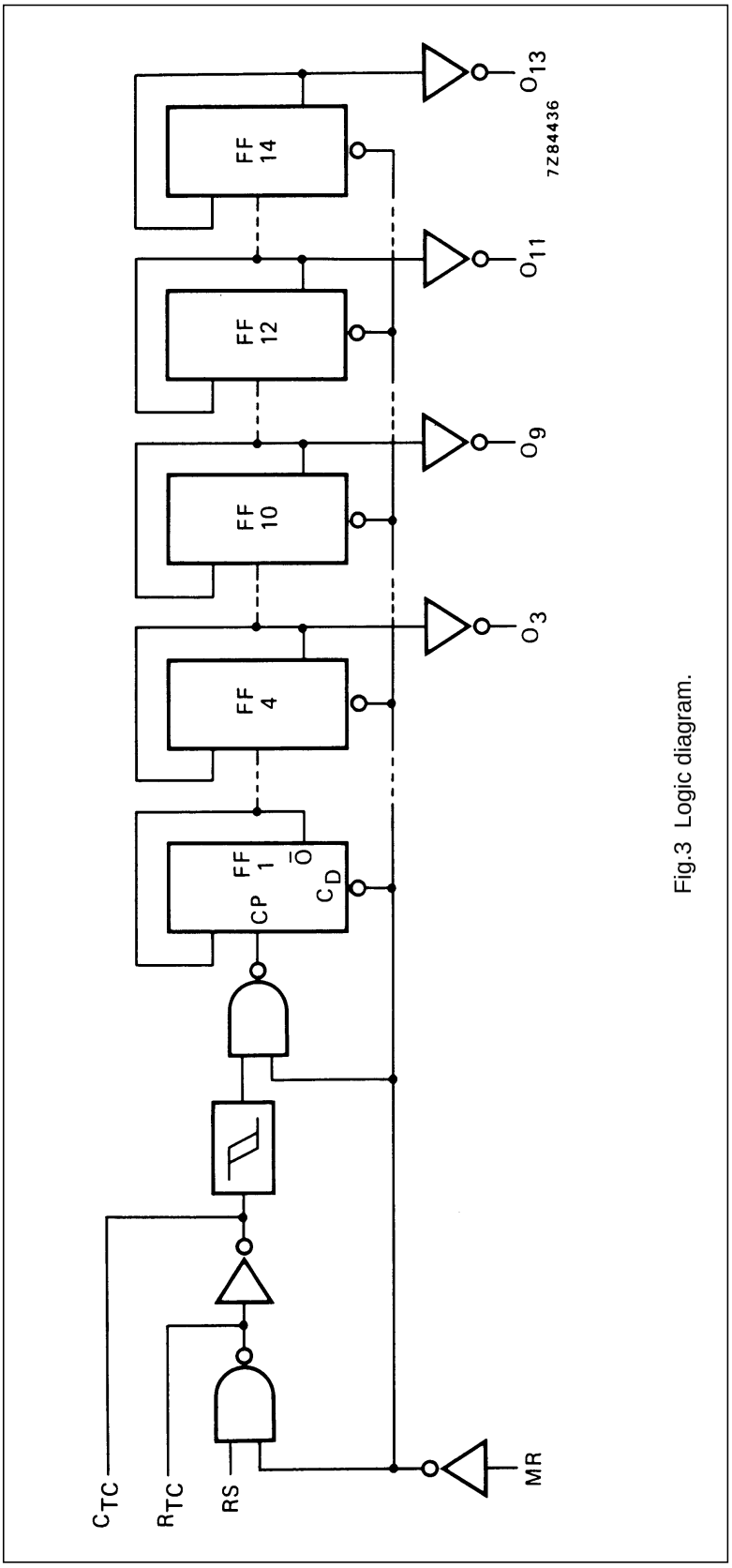


Fig.3 Logic diagram.

## AC CHARACTERISTICS

$V_{SS}$ = 0 V; $T_{amb}$ = 25 °C; $C_L$ = 50 pF; input transition times ≤ 20 ns

| | $V_{DD}$ V | SYMBOL | MIN. | TYP. | MAX. | | TYPICAL EXTRAPOLATION FORMULA |
|---|---|---|---|---|---|---|---|
| Propagation delays | | | | | | | |
| RS → $O_3$ | 5 | | | 210 | 420 | ns | 183 ns + (0,55 ns/pF) $C_L$ |
| HIGH to LOW | 10 | $t_{PHL}$ | | 80 | 160 | ns | 69 ns + (0,23 ns/pF) $C_L$ |
| | 15 | | | 50 | 100 | ns | 42 ns + (0,16 ns/pF) $C_L$ |
| | 5 | | | 210 | 420 | ns | 183 ns + (0,55 ns/pF) $C_L$ |
| LOW to HIGH | 10 | $t_{PLH}$ | | 80 | 160 | ns | 69 ns + (0,23 ns/pF) $C_L$ |
| | 15 | | | 50 | 100 | ns | 42 ns + (0,16 ns/pF) $C_L$ |
| $O_n$ → $O_{n+1}$ | 5 | | | 25 | 50 | ns | |
| HIGH to LOW | 10 | $t_{PHL}$ | | 10 | 20 | ns | |
| | 15 | | | 6 | 12 | ns | |
| | 5 | | | 25 | 50 | ns | |
| LOW to HIGH | 10 | $t_{PLH}$ | | 10 | 20 | ns | |
| | 15 | | | 6 | 12 | ns | |
| MR → $O_n$ | 5 | | | 100 | 200 | ns | 73 ns + (0,55 ns/pF) $C_L$ |
| HIGH to LOW | 10 | $t_{PHL}$ | | 40 | 80 | ns | 29 ns + (0,23 ns/pF) $C_L$ |
| | 15 | | | 30 | 60 | ns | 22 ns + (0,16 ns/pF) $C_L$ |
| Output transition | 5 | | | 60 | 120 | ns | 10 ns + (1,0 ns/pF) $C_L$ |
| times | 10 | $t_{THL}$ | | 30 | 60 | ns | 9 ns + (0,42 ns/pF) $C_L$ |
| HIGH to LOW | 15 | | | 20 | 40 | ns | 6 ns + (0,28 ns/pF) $C_L$ |
| | 5 | | | 60 | 120 | ns | 10 ns + (1,0 ns/pF) $C_L$ |
| LOW to HIGH | 10 | $t_{TLH}$ | | 30 | 60 | ns | 9 ns + (0,42 ns/pF) $C_L$ |
| | 15 | | | 20 | 40 | ns | 6 ns + (0,28 ns/pF) $C_L$ |
| Minimum clock pulse | 5 | | 120 | 60 | | ns | |
| width input RS | 10 | $t_{WRSH}$ | 50 | 25 | | ns | |
| HIGH | 15 | | 30 | 15 | | ns | |
| Minimum MR pulse | 5 | | 50 | 25 | | ns | |
| width; HIGH | 10 | $t_{WMRH}$ | 30 | 15 | | ns | |
| | 15 | | 20 | 10 | | ns | |
| Recovery time | 5 | | 160 | 80 | | ns | |
| for MR | 10 | $t_{RMR}$ | 80 | 40 | | ns | |
| | 15 | | 60 | 30 | | ns | |
| Maximum clock pulse | 5 | | 4 | 8 | | MHz | |
| frequency input RS | 10 | $f_{max}$ | 10 | 20 | | MHz | |
| | 15 | | 15 | 30 | | MHz | |

## AC CHARACTERISTICS

$V_{SS}$ = 0 V; $T_{amb}$ = 25 °C; input transition times ≤ 20 ns

| | $V_{DD}$ V | TYPICAL FORMULA FOR P (μW)(1) |
|---|---|---|
| Dynamic power dissipation | 5 | $700\ f_i + f_o C_L V_{DD}^2$ |
| per package | 10 | $3\,300\ f_i + f_o C_L V_{DD}^2$ |
| (P) | 15 | $8\,900\ f_i + f_o C_L V_{DD}^2$ |
| Total power dissipation | 5 | $700\ f_{osc} + f_o C_L V_{DD}^2 + 2C_t V_{DD}^2 f_{osc} + 690\ V_{DD}$ |
| when using the | 10 | $3\,300\ f_{osc} + f_o C_L V_{DD}^2 + 2C_t V_{DD}^2 f_{osc} + 6\,900\ V_{DD}$ |
| on-chip oscillator (P) | 15 | $8\,900\ f_{osc} + f_o C_L V_{DD}^2 + 2C_t V_{DD}^2 f_{osc} + 22\,000\ V_{DD}$ |

**Notes**

1. where:
   $f_i$ = input frequency (MHz)
   $f_o$ = output frequency (MHz)
   $C_L$ = load capacitance (pF)
   $V_{DD}$ = supply voltage (V)
   $C_t$ = timing capacitance (pF)
   $f_{osc}$ = oscillator frequency (MHz)

**RC oscillator**

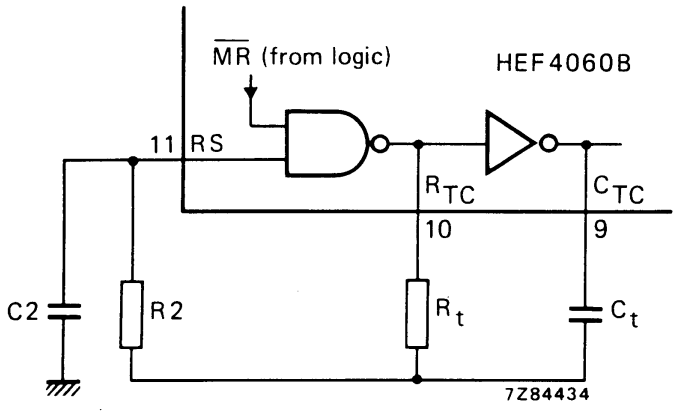


Typical formula for oscillator frequency:

$$f_{osc} = \frac{1}{2{,}3 \times R_t \times C_t}$$

Fig.4 External component connection for RC oscillator.

### Timing component limitations

The oscillator frequency is mainly determined by $R_tC_t$, provided $R_t$ << R2 and R2C2 << $R_tC_t$. The function of R2 is to minimize the influence of the forward voltage across the input protection diodes on the frequency. The stray capacitance C2 should be kept as small as possible. In consideration of accuracy, $C_t$ must be larger than the inherent stray capacitance. $R_t$ must be larger than the LOCMOS 'ON' resistance in series with it, which typically is 500 Ω at $V_{DD}$ = 5 V, 300 Ω at $V_{DD}$ = 10 V and 200 Ω at $V_{DD}$ = 15 V.

The recommended values for these components to maintain agreement with the typical oscillation formula are:

$C_t \geq 100$ pF, up to any practical value,
$10\ k\Omega \leq R_t \leq 1\ M\Omega$.

### Typical crystal oscillator circuit

In Fig.5, R2 is the power limiting resistor. For starting and maintaining oscillation a minimum transconductance is necessary.

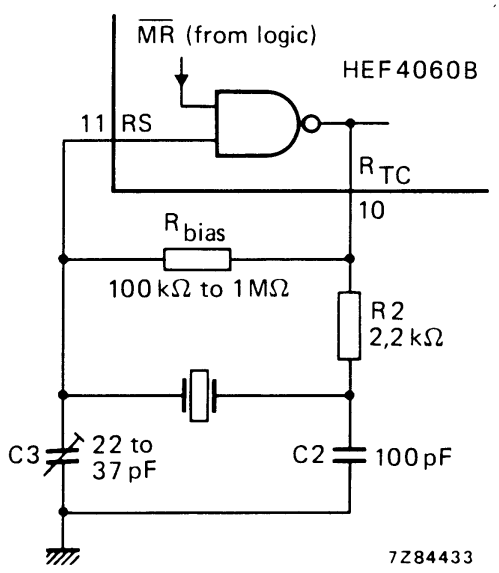


Fig.5 External component connection for crystal oscillator.

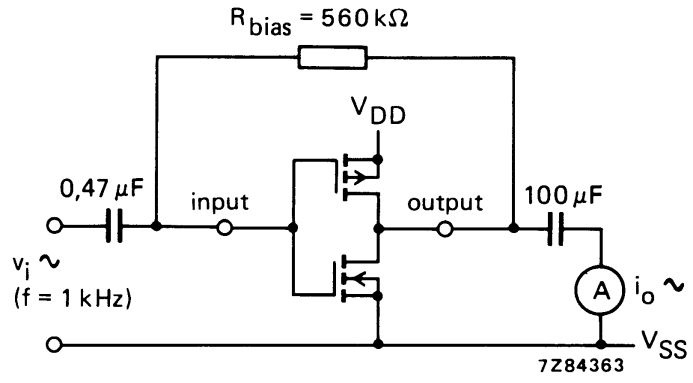


Fig.6 Test set-up for measuring forward transconductance $g_{fs} = di_o/dv_i$ at $v_o$ is constant (see also graph Fig.7); MR = LOW.

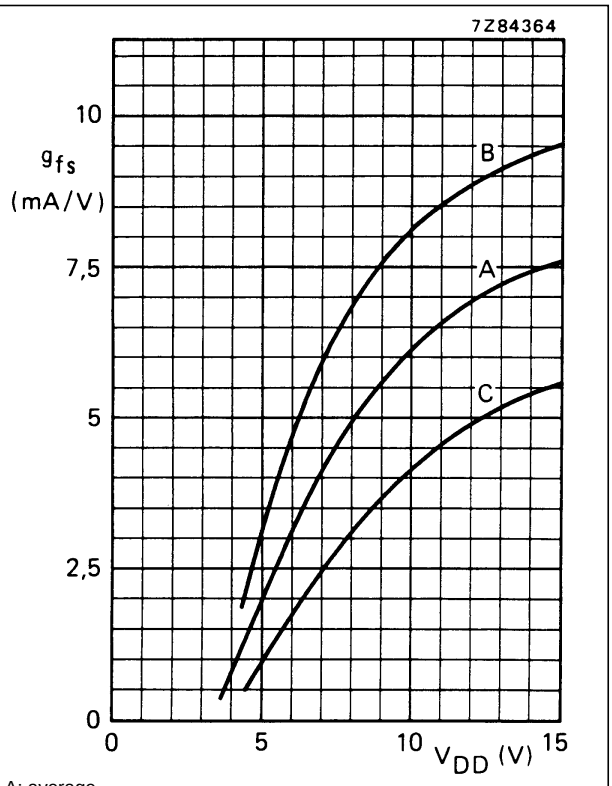


A: average
B: average + 2 s,
C: average – 2 s, where 's' is the observed standard deviation.

Fig.7 Typical forward transconductance $g_{fs}$ as a function of the supply voltage at $T_{amb}$ = 25 °C.

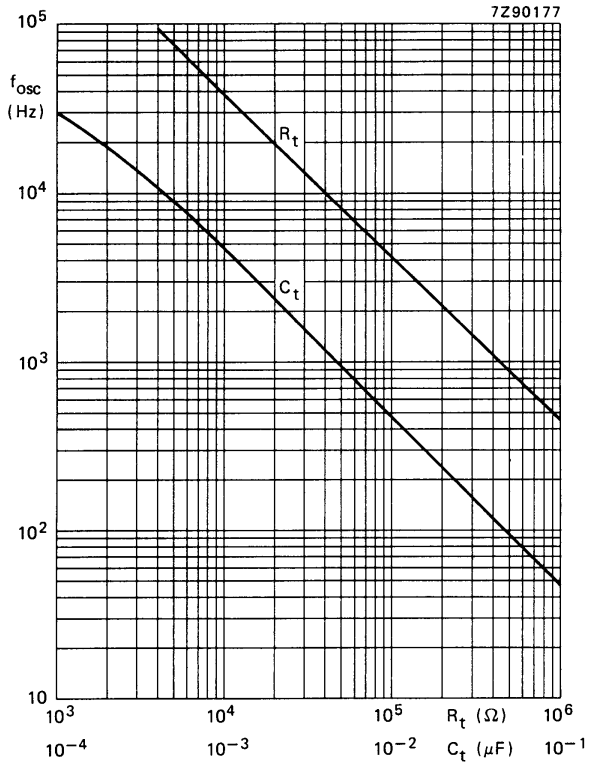


$C_t$ curve at $R_t$ = 100 kΩ; R2 = 470 kΩ.
$R_t$ curve at $C_t$ = 1 nF; R2 = 5 $R_t$.

Fig.8 RC oscillator frequency as a function of $R_t$ and $C_t$ at $V_{DD}$ = 5 to 15 V; $T_{amb}$ = 25 °C.

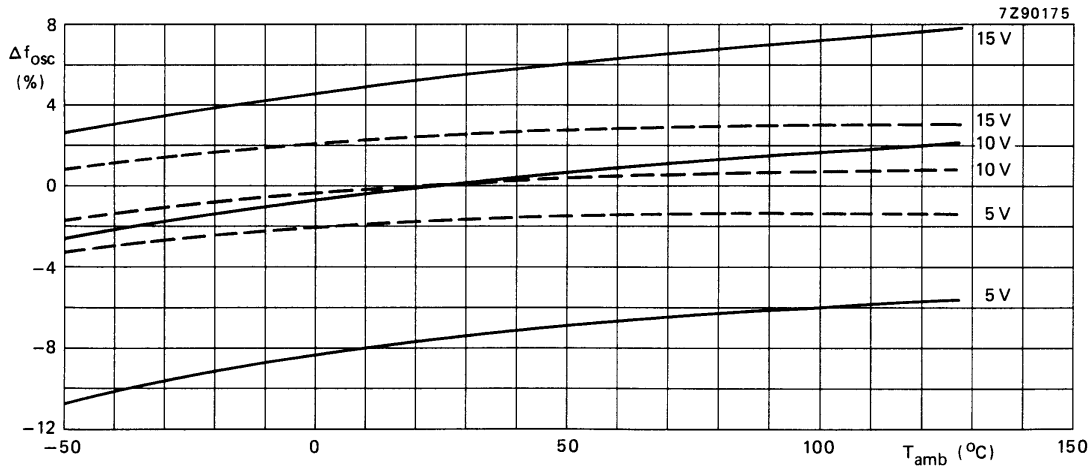


___ $R_t$ = 100 kΩ; $C_t$ = 1 nF; R2 = 0.
- - - $R_t$ = 100 kΩ; $C_t$ = 1 nF; R2 = 300 kΩ.

Fig.9 Oscillator frequency deviation ($\Delta f_{osc}$) as a function of ambient temperature; referenced at: $f_{osc}$ at $T_{amb}$ = 25 °C and $V_{DD}$ = 10 V.

ENTEGRECİ

Bu belge www.entegreci.com üzerinden sunulmaktadır.

# Elektronik komponent tedarikinde Entegreci

Entegreci, Eskişehir merkezli, Türkiye geneline satış yapan bir elektronik komponent mağazasıdır. Entegreler (IC), mikrodenetleyiciler, transistörler, diyotlar, pasif elemanlar, konnektörler, modüller ve geliştirme kartları tek adetten seri üretim adetlerine kadar satılır. Ürün sayfalarında güncel stok durumunu, fiyatı ve datasheet bağlantısını bulabilirsiniz.

### Parça koduyla arama

Üretici parça numarasını yazın; stok ve fiyatı hemen görün.

**www.entegreci.com**

### Ürün kategorileri

Entegreden kapasitöre tüm elektronik komponent kategorileri.

**Kategorilere göz atın**

### Üreticiler

Aradığınız üreticinin ürünlerini tek sayfada inceleyin.

**Üreticileri görün**

### Toplu alım ve teklif

Listede olmayan ya da yüksek adetli parçalar için teklif isteyin.

**Teklif isteyin**

**www.entegreci.com** | **destek@entegreci.com** | **0850 305 90 34**

Entegreci is an online electronic components store based in Türkiye. Search by manufacturer part number to see stock, prices and datasheets for integrated circuits, microcontrollers, transistors, passive components and connectors, or request a quote for parts that are not listed.

Bu sayfa Entegreci tarafından eklenmiştir. Belgenin önceki sayfaları asıl yayıncısına aittir ve içeriği değiştirilmemiştir; en güncel sürüm için belgenin yayıncısına başvurun.