HA17741/PS

General-Purpose Operational Amplifier
(Frequency Compensated)

HITACHI

Description

The HA17741/PS is an internal phase compensation high-performance operational amplifier, that is appropriate for use in a wide range of applications in the test and control fields.

Features

- High voltage gain : 106 dB (Typ)
- Wide output amplitude : ±13 V (Typ) (at $R_L \geq 2$ kΩ)
- Shorted output protection
- Adjustable offset voltage
- Internal phase compensation

Ordering Information

Application	Type No.	Package
Industrial use	HA17741PS	DP-8
Commercial use	HA17741	

Pin Arrangement

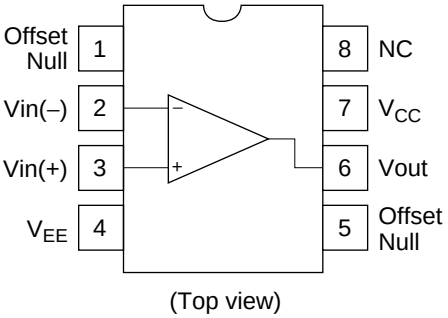

(Top view)

Hitachi semiconductor

Circuit Structure

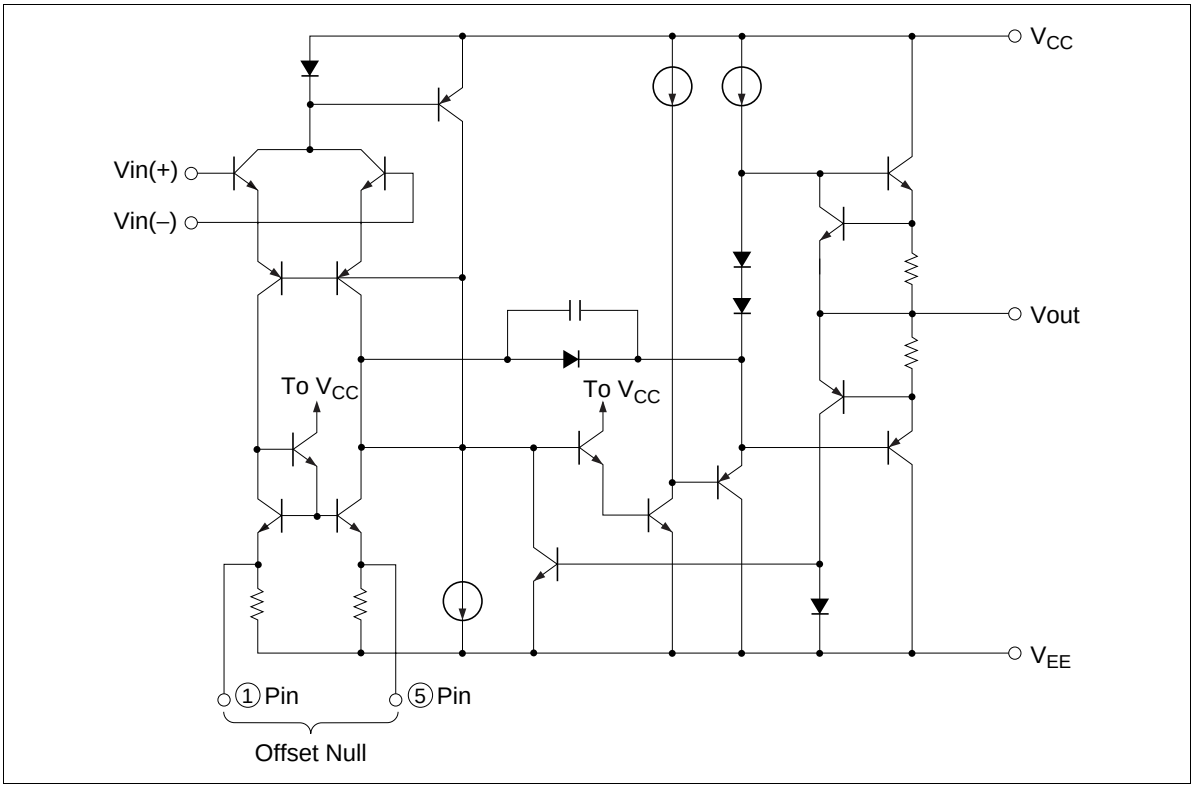

Absolute Maximum Ratings (Ta = 25°C)

Item	Symbol	Ratings		Unit
		HA17741PS	HA17741	
Power-supply voltage	V_{CC}	+18	+18	V
	V_{EE}	–18	–18	V
Input voltage	Vin	±15	±15	V
Differential input voltage	Vin(diff)	±30	±30	V
Allowable power dissipation	P_T	670 *	670 *	mW
Operating temperature	Topr	–20 to +75	–20 to +75	°C
Storage temperature	Tstg	–55 to +125	–55 to +125	°C

Note: These are the allowable values up to Ta = 45°C. Derate by 8.3 mW/°C above that temperature.

Electrical Characteristics

Electrical Characteristics-1 (V_{CC} = –V_{EE} = 15 V, Ta = 25°C)

Item	Symbol	Min	Typ	Max	Unit	Test Condition
Input offset voltage	V_{IO}	—	1.0	6.0	mV	R_S ≤ 10 kΩ
Input offset current	I_{IO}	—	18	200	nA	
Input bias current	I_{IB}	—	75	500	nA	
Power-supply	$\Delta V_{IO}/\Delta V_{CC}$	—	30	150	µV/V	R_S ≤ 10 kΩ
rejection ratio	$\Delta V_{IO}/\Delta V_{EE}$	—	30	150	µV/V	R_S ≤ 10 kΩ
Voltage gain	A_{VD}	86	106	—	dB	R_L ≥ 2 kΩ, Vout = ±10 V
Common-mode rejection ratio	CMR	70	90	—	dB	R_S ≤ 10 kΩ
Common-mode input voltage range	V_{CM}	±12	±13	—	V	R_S ≤ 10 kΩ
Maximum output	V_{OP-P}	±12	±14	—	V	R_L ≥ 10 kΩ
voltage amplitude		±10	±13	—	V	R_L ≥ 2 kΩ
Power dissipation	Pd	—	65	100	mW	No load
Slew rate	SR	—	1.0	—	V/µs	R_L ≥ 2 kΩ
Rise time	t_r	—	0.3	—	µs	Vin = 20 mV, R_L = 2 kΩ,
Overshoot	Vover	—	5.0	—	%	C_L = 100 pF
Input resistance	Rin	0.3	1.0	—	MΩ	

Electrical Characteristics-2 (V_{CC} = –V_{EE} = 15 V, Ta = –20 to +75°C)

Item	Symbol	Min	Typ	Max	Unit	Test Condition
Input offset voltage	V_{IO}	—	—	9.0	mV	R_S ≤ 10 kΩ
Input offset current	I_{IO}	—	—	400	nA	
Input bias current	I_{IB}	—	—	1,100	nA	
Voltage gain	A_{VD}	80	—	—	dB	R_L ≥ 2 kΩ, Vout = ±10 V
Maximum output voltage amplitude	V_{OP-P}	±10	—	—	V	R_L ≥ 2 kΩ

IC Operational Amplifier Application Examples

Multivibrator

A multivibrator is a square wave generator that uses an RC circuit charge/discharge operation to generate the waveform. Multivibrators are widely used as the square wave source in such applications as power supplies and electronic switches.

Multivibrators are classified into three types, astable multivibrators, which have no stable states, monostable multivibrators, which have one stable state, and bistable multivibrators, which have two stable states.

1. Astable Multivibrator

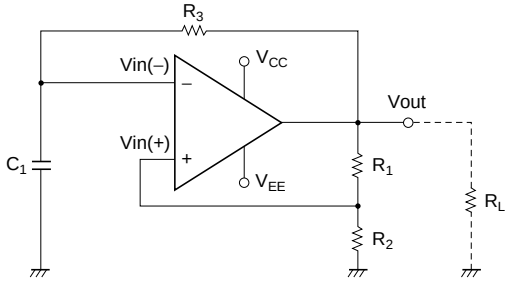

Figure 1 Astable Multivibrator Operating Circuit

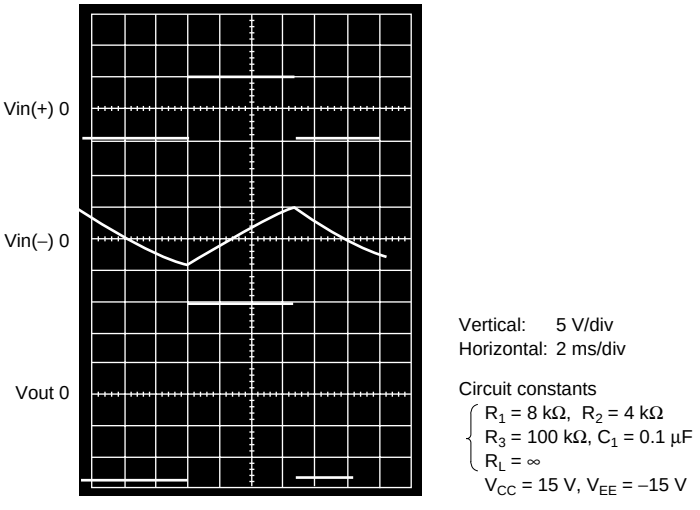

Figure 2 HA17741 Astable Multivibrator Operating Waveform

2. Monostable Multivibrator

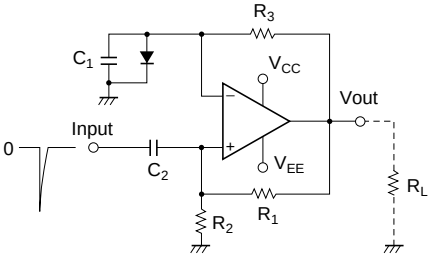

Figure 3 Monostable Multivibrator Operating Circuit

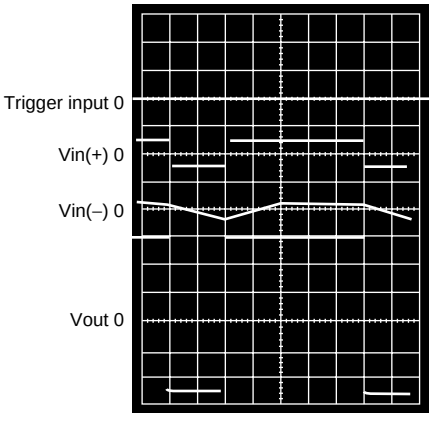

Figure 4 HA17741 Monostable Multivibrator Operating Waveform

3. Bistable Multivibrator

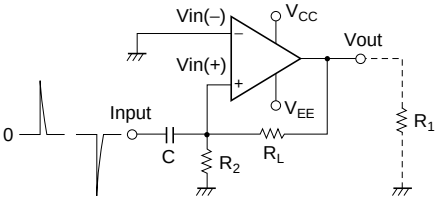

Figure 5 Bistable Multivibrator Operating Circuit

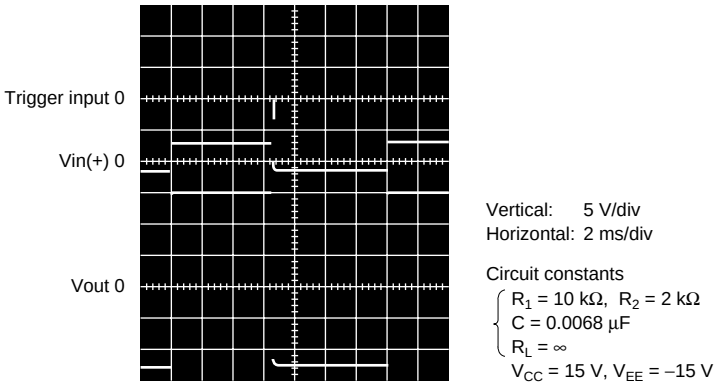

Figure 6 HA17741 Bistable Multivibrator Operating Waveform

Wien Bridge Sine Wave Oscillator

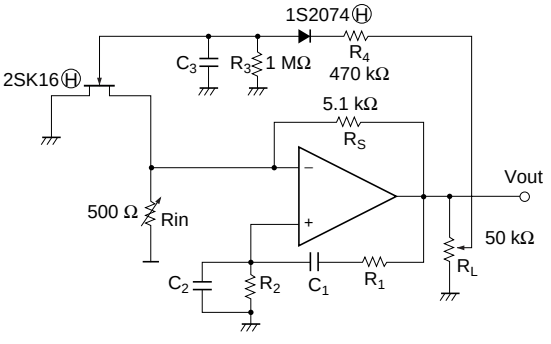

Figure 7 Wien Bridge Sine Wave Oscillator

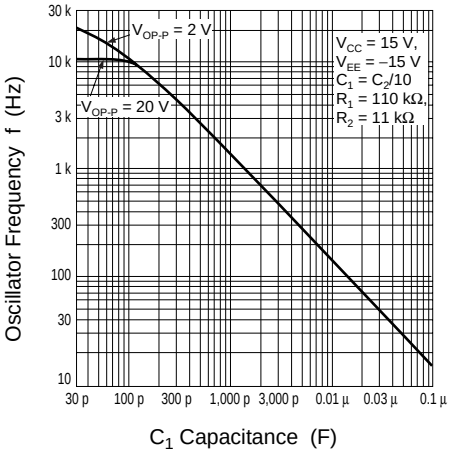

Figure 8 HA17741 Wien Bridge Sine Wave Oscillator f–C Characteristics

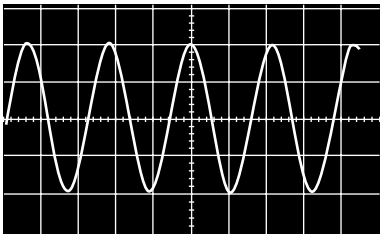

Vertical: 5 V/div
Horizontal: 0.5 ms/div

Test circuit condition
V_{CC} = 15 V, V_{EE} = −15 V
R_1 = 110 kΩ, R_2 = 11 kΩ
C_1 = 0.0015 µF, C_2 = 0.015 µF
Test results
f = 929.7 Hz, T.H.P = 0.06%

Figure 9 HA17741 Wien Bridge Sine Wave Oscillator Operating Waveform

Quadrature Oscillator

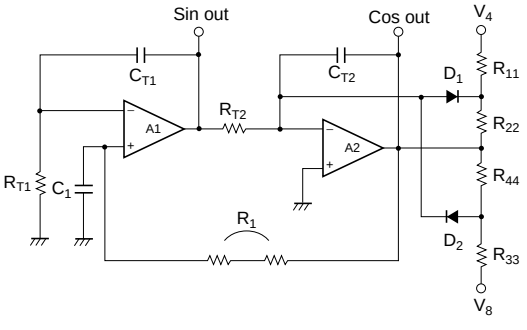

Figure 10 Quadrature Sine Wave Oscillator

Figure 10 shows the circuit diagram for a quadrature sine wave oscillator. This circuit consists of two integrators and a limiter circuit, and provides not only a sine wave output, but also a cosine output, that is, it also supplies the waveform delayed by 90°. The output amplitude is essentially determined by the limiter circuit.

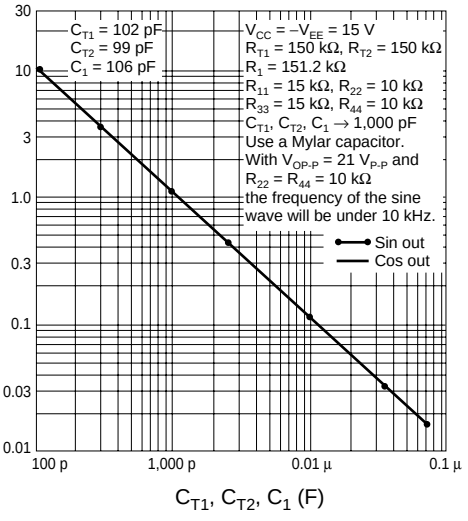

Figure 11 HA17741 Quadrature Sine Wave Oscillator

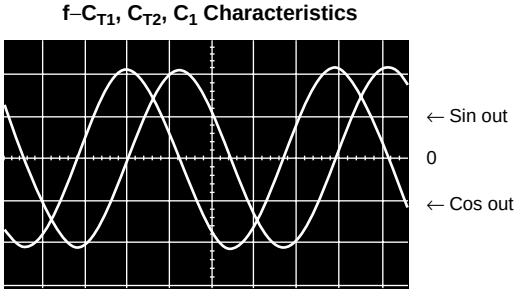

Figure 12 Sine and Cosine Output Waveforms

Triangular Wave Generator

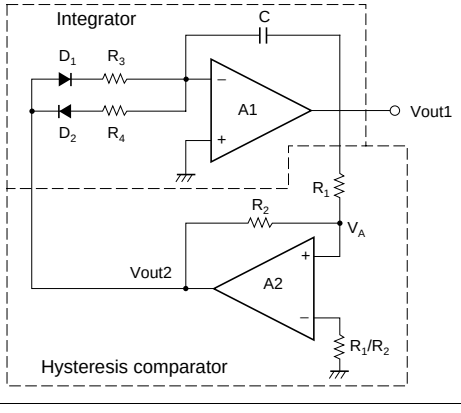

Figure 13 Triangular Wave Generator Operating Circuit

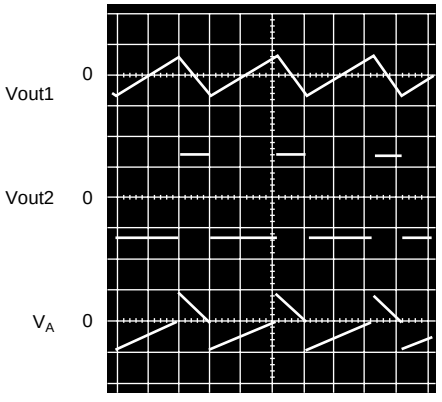

Vertical: 10 V/div
Horizontal: 10 ms/div

Circuit constants
V_{CC} = 15 V, V_{EE} = –15 V
R_1 = 10 kΩ, R_2 = 20 kΩ
R_3 = 100 kΩ, R_4 = 200 kΩ
C = 0.1 µF

Figure 14 HA17741 Triangular Wave Generator Operating Waveform

Sawtooth Waveform Generator

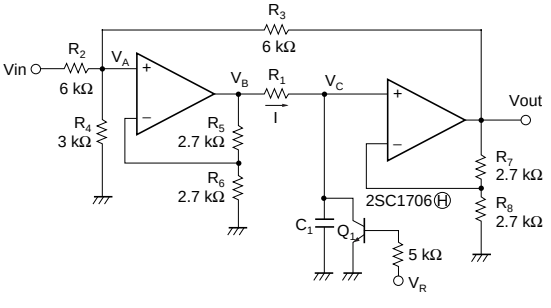

Figure 15 Sawtooth Waveform Generator

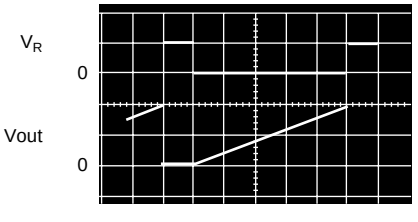

Vertical: 5 V/div
Horizontal: 2 ms/div

Circuit constants
V_{CC} = 15 V, V_{EE} = –15 V
R_1 = 100 kΩ, C_1 = 0.1 µF
V_{in} = 10 V

Figure 16 HA17741 Sawtooth Waveform Generator Operating Waveform

Characteristic Curves

Voltage Offset Adjustment Circuit

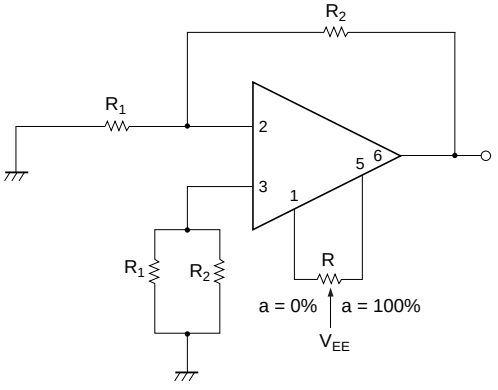

Input Offset Current vs. Power-Supply Voltage Characteristics

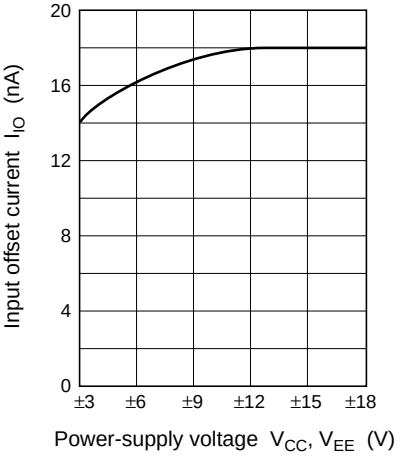

Power Dissipation vs. Power-Supply Voltage Characteristics

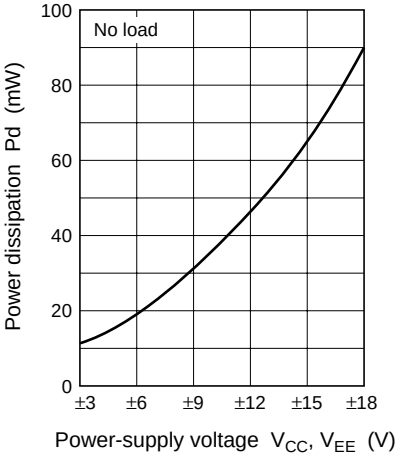

Voltage Gain vs. Power-Supply Voltage Characteristics

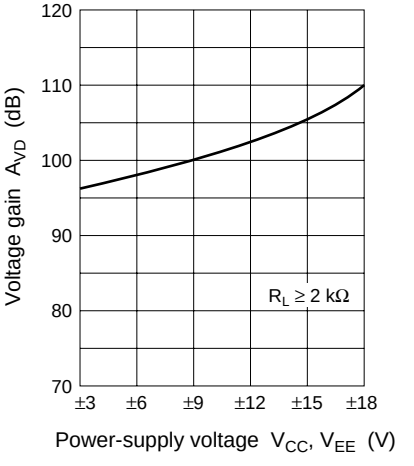

Maximum Output Voltage Amplitude vs. Power-Supply Voltage Characteristics

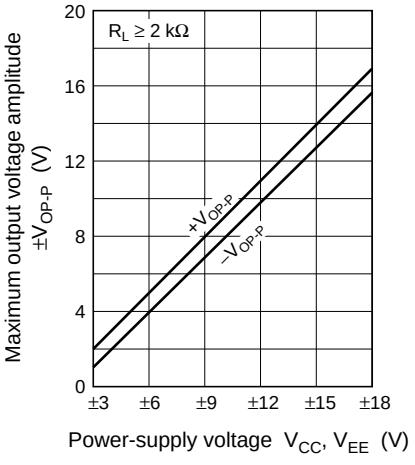

Input Offset Voltage vs. Ambient Temperature Characteristics

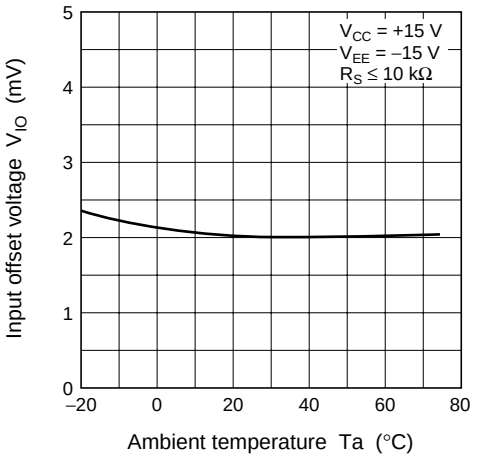

Input Offset Current vs. Ambient Temperature Characteristics

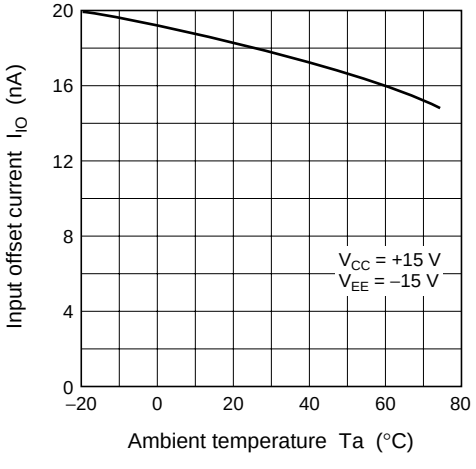

Input Bias Current vs. Ambient Temperature Characteristics

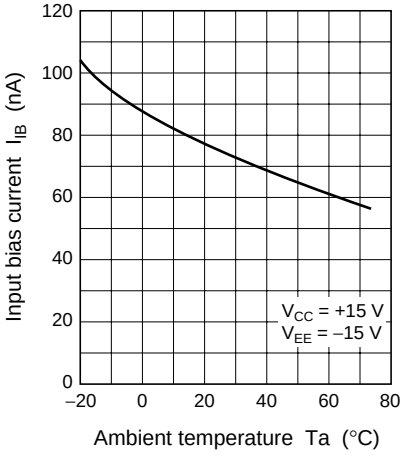

Power Dissipation vs. Ambient Temperature Characteristics

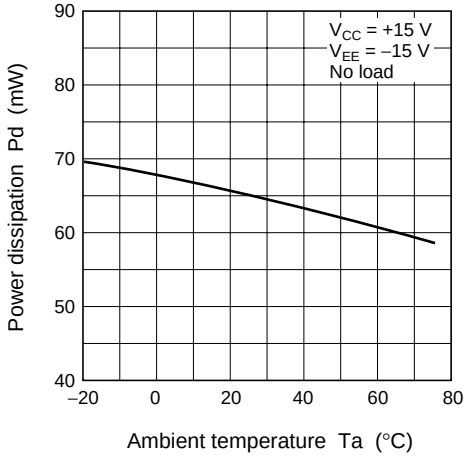

Voltage Gain vs. Ambient Temperature Characteristics

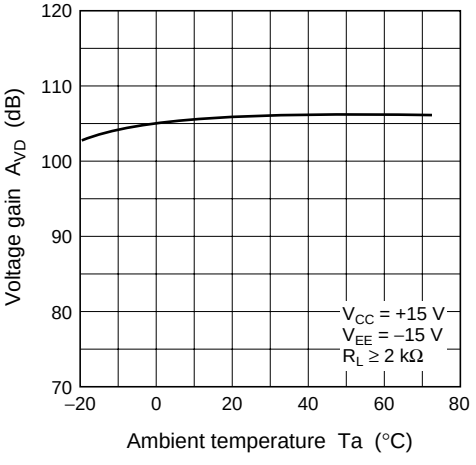

Maximum Output Voltage Amplitude vs. Ambient Temperature Characteristics

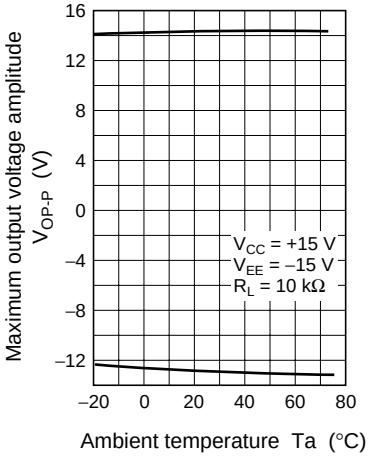

Output Shorted Current vs. Ambient Temperature Characteristics

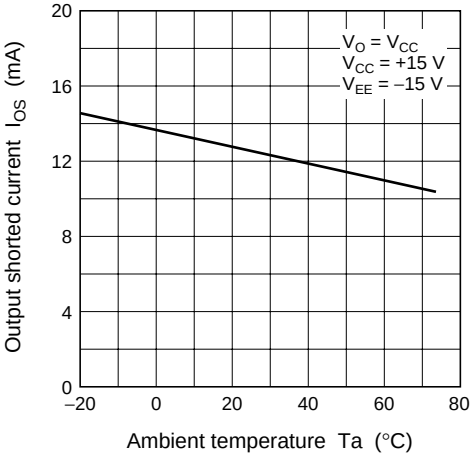

Maximum Output Voltage Amplitude vs. Load Resistance Characteristics

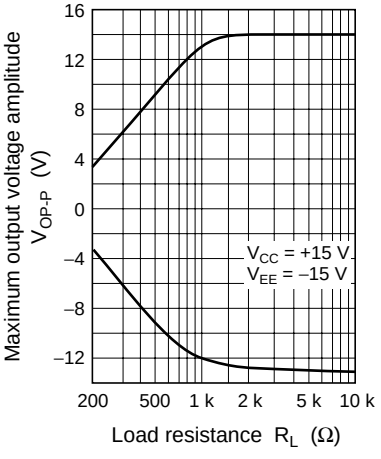

Offset Adjustment Characteristics

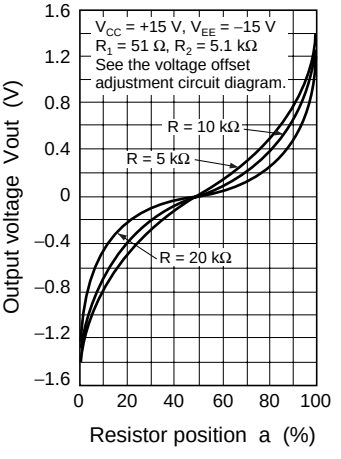

Maximum Output Voltage Amplitude vs. Frequency Characteristics

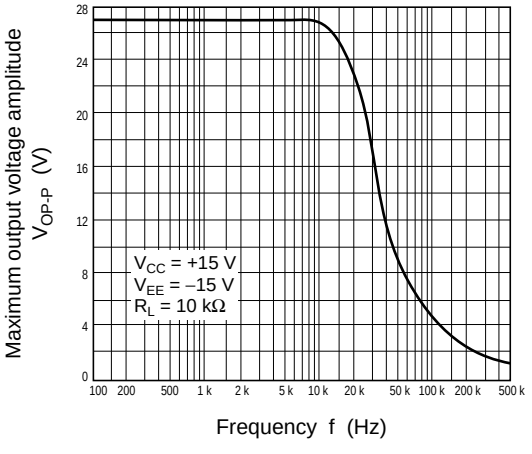

Input Resistance vs. Frequency Characteristics

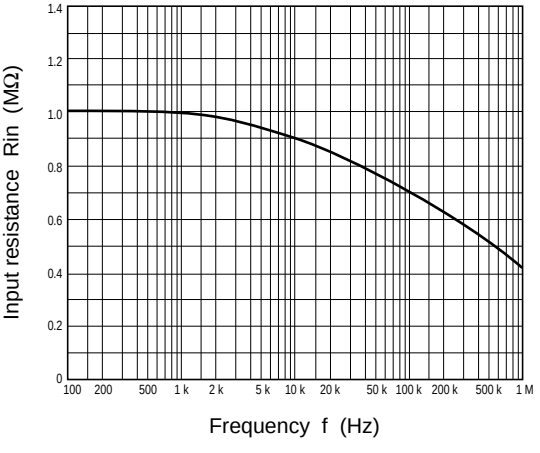

**Phase vs.
Frequency Characteristics**

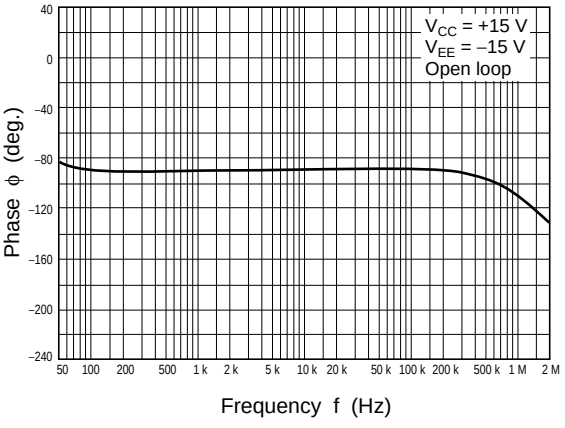

**Voltage Gain vs
Frequency Characteristics**

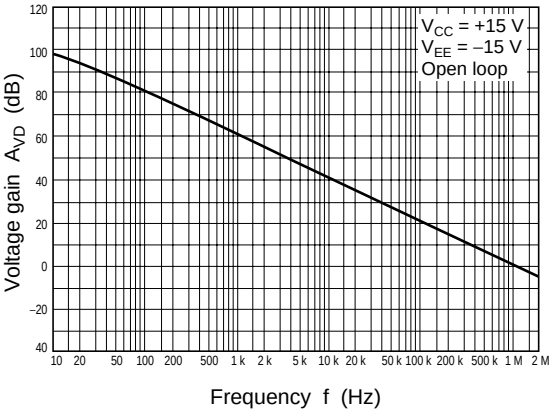

**Voltage Gain and Phase vs.
Frequency Characteristics (1)**

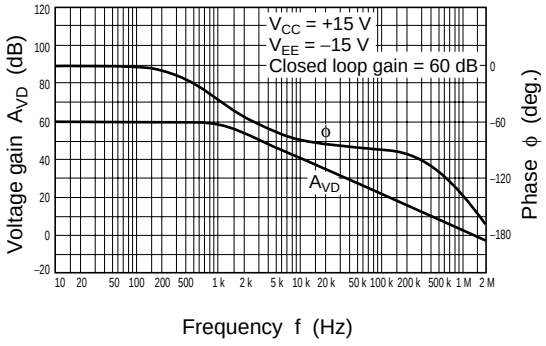

**Voltage Gain and Phase vs.
Frequency Characteristics (2)**

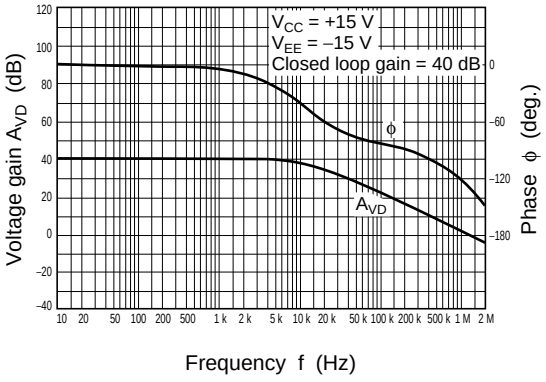

Voltage Gain and Phase vs. Frequency Characteristics (3)

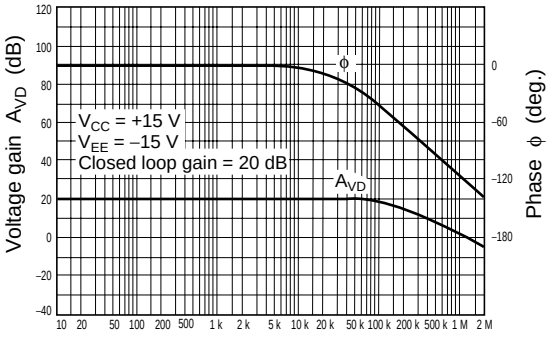

Voltage Gain and Phase vs. Frequency Characteristics (4)

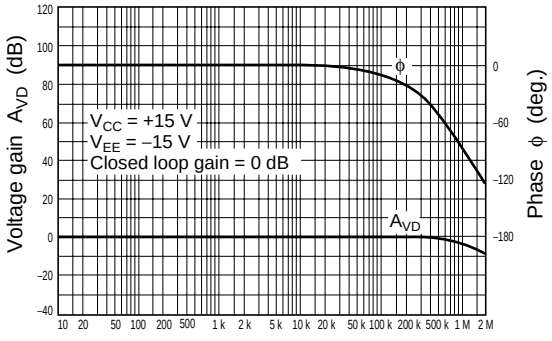

Impulse Response Characteristics Test Circuit

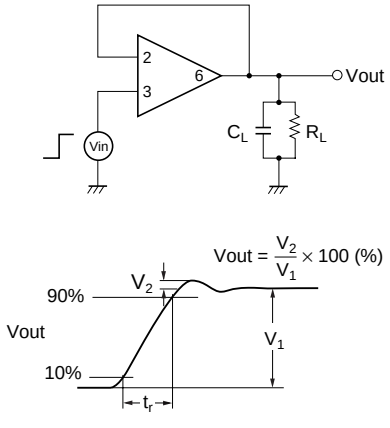

Rise time vs. Power-Supply Voltage Characteristics

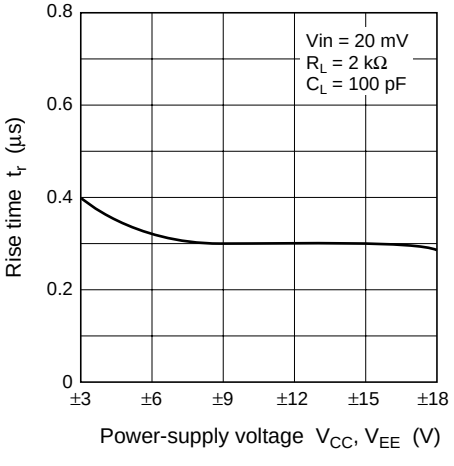

Overshoot vs. Power-Supply Voltage Characteristics

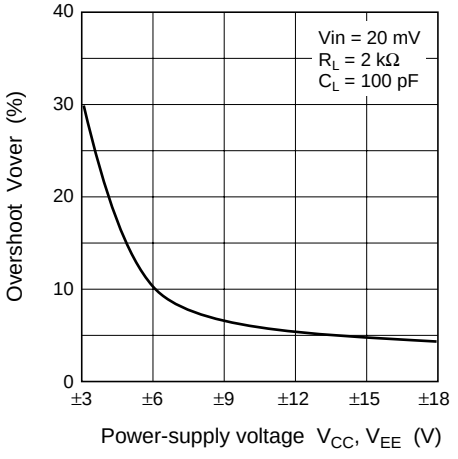

Impulse Response Characteristics

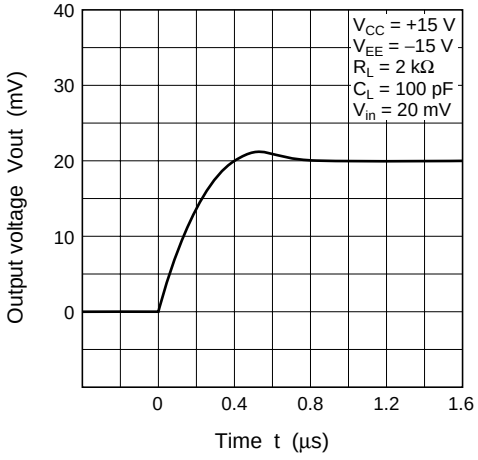

Package Dimensions

Unit: mm

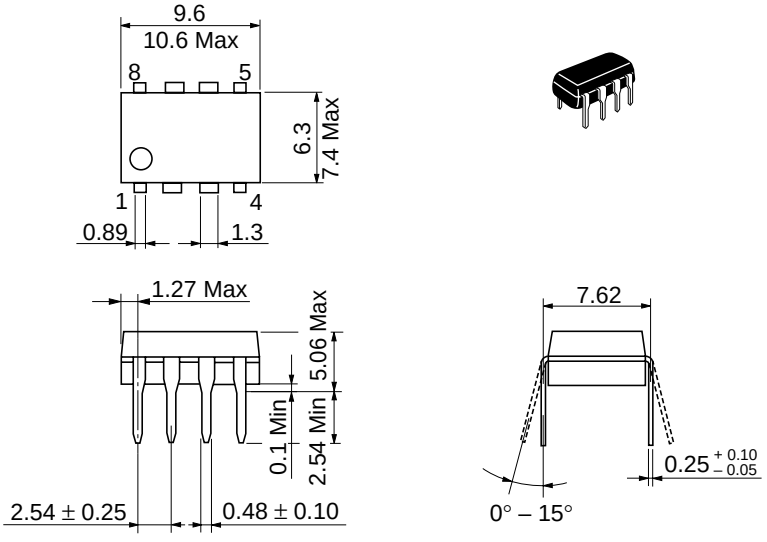

Hitachi Code	DP-8
JEDEC	Conforms
EIAJ	Conforms
Mass (reference value)	0.54 g

Cautions

1. Hitachi neither warrants nor grants licenses of any rights of Hitachi's or any third party's patent, copyright, trademark, or other intellectual property rights for information contained in this document. Hitachi bears no responsibility for problems that may arise with third party's rights, including intellectual property rights, in connection with use of the information contained in this document.
2. Products and product specifications may be subject to change without notice. Confirm that you have received the latest product standards or specifications before final design, purchase or use.
3. Hitachi makes every attempt to ensure that its products are of high quality and reliability. However, contact Hitachi's sales office before using the product in an application that demands especially high quality and reliability or where its failure or malfunction may directly threaten human life or cause risk of bodily injury, such as aerospace, aeronautics, nuclear power, combustion control, transportation, traffic, safety equipment or medical equipment for life support.
4. Design your application so that the product is used within the ranges guaranteed by Hitachi particularly for maximum rating, operating supply voltage range, heat radiation characteristics, installation conditions and other characteristics. Hitachi bears no responsibility for failure or damage when used beyond the guaranteed ranges. Even within the guaranteed ranges, consider normally foreseeable failure rates or failure modes in semiconductor devices and employ systemic measures such as fail-safes, so that the equipment incorporating Hitachi product does not cause bodily injury, fire or other consequential damage due to operation of the Hitachi product.
5. This product is not designed to be radiation resistant.
6. No one is permitted to reproduce or duplicate, in any form, the whole or part of this document without written approval from Hitachi.
7. Contact Hitachi's sales office for any questions regarding this document or Hitachi semiconductor products.

HITACHI

Hitachi, Ltd.
Semiconductor & Integrated Circuits.
Nippon Bldg., 2-6-2, Ohte-machi, Chiyoda-ku, Tokyo 100-0004, Japan
Tel: Tokyo (03) 3270-2111 Fax: (03) 3270-5109

URL
NorthAmerica : http:semiconductor.hitachi.com/
Europe : http://www.hitachi-eu.com/hel/ecg
Asia (Singapore) : http://www.has.hitachi.com.sg/grp3/sicd/index.htm
Asia (Taiwan) : http://www.hitachi.com.tw/E/Product/SICD_Frame.htm
Asia (HongKong) : http://www.hitachi.com.hk/eng/bo/grp3/index.htm
Japan : http://www.hitachi.co.jp/Sicd/indx.htm

For further information write to:

Hitachi Semiconductor (America) Inc.
179 East Tasman Drive,
San Jose,CA 95134
Tel: <1> (408) 433-1990
Fax: <1>(408) 433-0223

Hitachi Europe GmbH
Electronic components Group
Dornacher Straβe 3
D-85622 Feldkirchen, Munich
Germany
Tel: <49> (89) 9 9180-0
Fax: <49> (89) 9 29 30 00

Hitachi Europe Ltd.
Electronic Components Group.
Whitebrook Park
Lower Cookham Road
Maidenhead
Berkshire SL6 8YA, United Kingdom
Tel: <44> (1628) 585000
Fax: <44> (1628) 778322

Hitachi Asia Pte. Ltd.
16 Collyer Quay #20-00
Hitachi Tower
Singapore 049318
Tel: 535-2100
Fax: 535-1533

Hitachi Asia Ltd.
Taipei Branch Office
3F, Hung Kuo Building. No.167,
Tun-Hwa North Road, Taipei (105)
Tel: <886> (2) 2718-3666
Fax: <886> (2) 2718-8180

Hitachi Asia (Hong Kong) Ltd.
Group III (Electronic Components)
7/F., North Tower, World Finance Centre,
Harbour City, Canton Road, Tsim Sha Tsui,
Kowloon, Hong Kong
Tel: <852> (2) 735 9218
Fax: <852> (2) 730 0281
Telex: 40815 HITEC HX

Copyright ' Hitachi, Ltd., 1998. All rights reserved. Printed in Japan.

ENTEGRECİ

Bu belge www.entegreci.com üzerinden sunulmaktadır.

Elektronik komponent tedarikinde Entegreci

Entegreci, Eskişehir merkezli, Türkiye geneline satış yapan bir elektronik komponent mağazasıdır. Entegreler (IC), mikrodenetleyiciler, transistörler, diyotlar, pasif elemanlar, konnektörler, modüller ve geliştirme kartları tek adetten seri üretim adetlerine kadar satılır. Ürün sayfalarında güncel stok durumunu, fiyatı ve datasheet bağlantısını bulabilirsiniz.

Parça koduyla arama

Üretici parça numarasını yazın; stok ve fiyatı hemen görün.

www.entegreci.com

Ürün kategorileri

Entegreden kapasitöre tüm elektronik komponent kategorileri.

Kategorilere göz atın

Üreticiler

Aradığınız üreticinin ürünlerini tek sayfada inceleyin.

Üreticileri görün

Toplu alım ve teklif

Listede olmayan ya da yüksek adetli parçalar için teklif isteyin.

Teklif isteyin

www.entegreci.com | **destek@entegreci.com** | **0850 305 90 34**

Entegreci is an online electronic components store based in Türkiye. Search by manufacturer part number to see stock, prices and datasheets for integrated circuits, microcontrollers, transistors, passive components and connectors, or request a quote for parts that are not listed.

Bu sayfa Entegreci tarafından eklenmiştir. Belgenin önceki sayfaları asıl yayıncısına aittir ve içeriği değiştirilmemiştir; en güncel sürüm için belgenin yayıncısına başvurun.